HILTI FIRESTOP SYSTEMS GUIDE , THROUGH PENETRATION AND CONSTRUCTION JOINTS

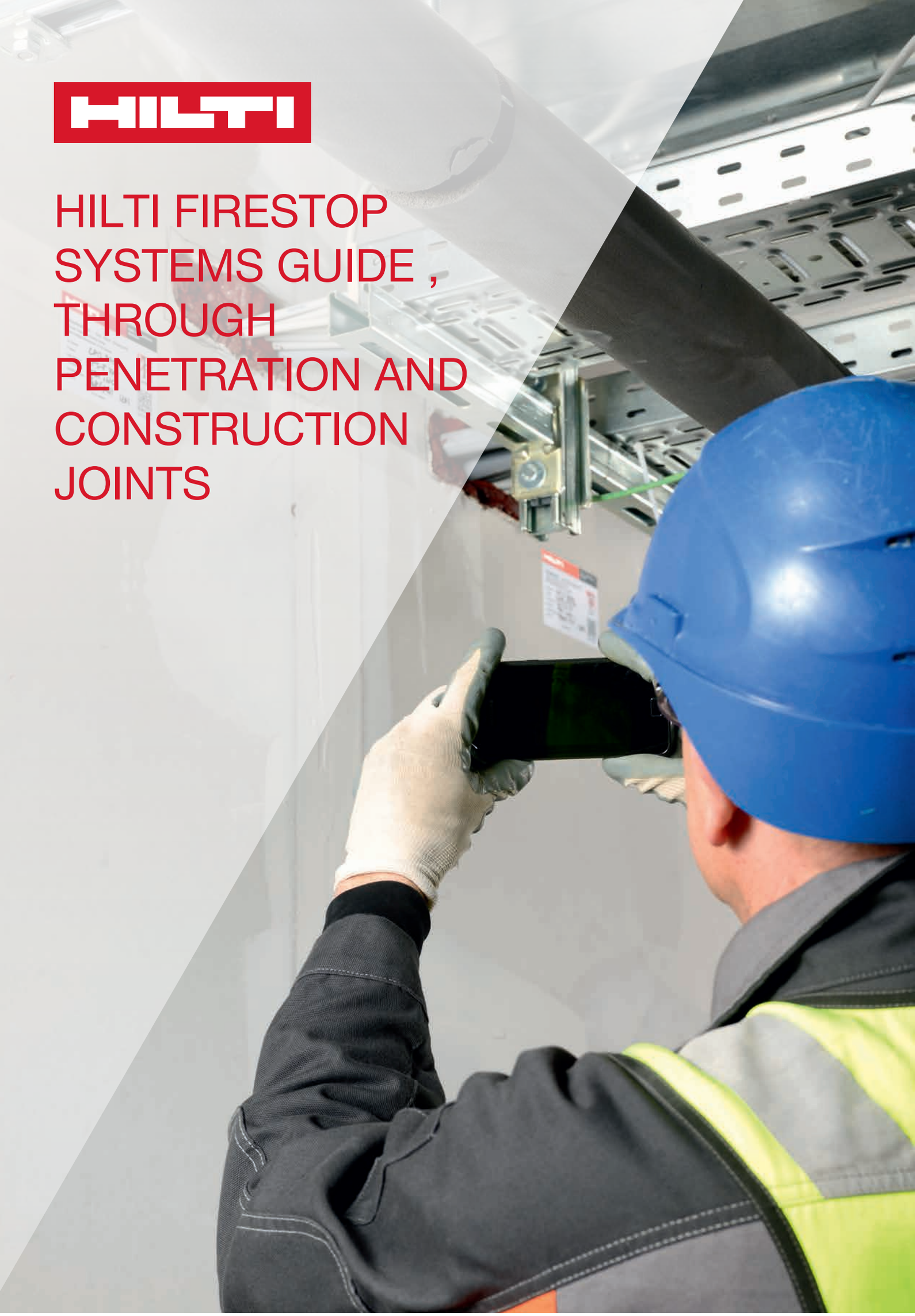

Introduction 2

Fire Risk Overview 2
Dedicated to Life Safety 4

Application Review, Products and Selection Chart 5

Product Information and Installation Instructions 6
Firestop Selection Chart 17

Firestop System Drawings 26

Through-Penetration Drawings 26
Blank Opening 26
Metal Pipe 36
Plastic Pipe 48
Cables 69
Cables Trays 85
Cables Trays (continued) 87
Insulated Metal Pipe 96
Electrical Busways 123
Metal Ducts/Mechanical Support 128
Insulated Metal Ducts 139
Trunking 148
Large Opening/Multiple Penetration 150
Joint Drawings 186
Curtain Wall Joints 245

Estimating Tables and Technical Data 269

Package Volume and Estimating Tables 269
UL Certificates of Compliance Sheets 277
Fire Service Department Letter 280

Hilti Firestop
Saving Lives
through innovation
and education

Is firestopping still too hot for you to handle?

Hilti firestop systems provide simple, reliable solutions.

Hilti firestop systems make the sealing of openings for pipes and cable trays in fire compartment walls, floors and ceilings easier than ever before. Tested, approved and highly reliable, Hilti firestop products are tailored exactly to the needs of the electrical and mechanical trades.

Fire risk overview - electrical & mechanical

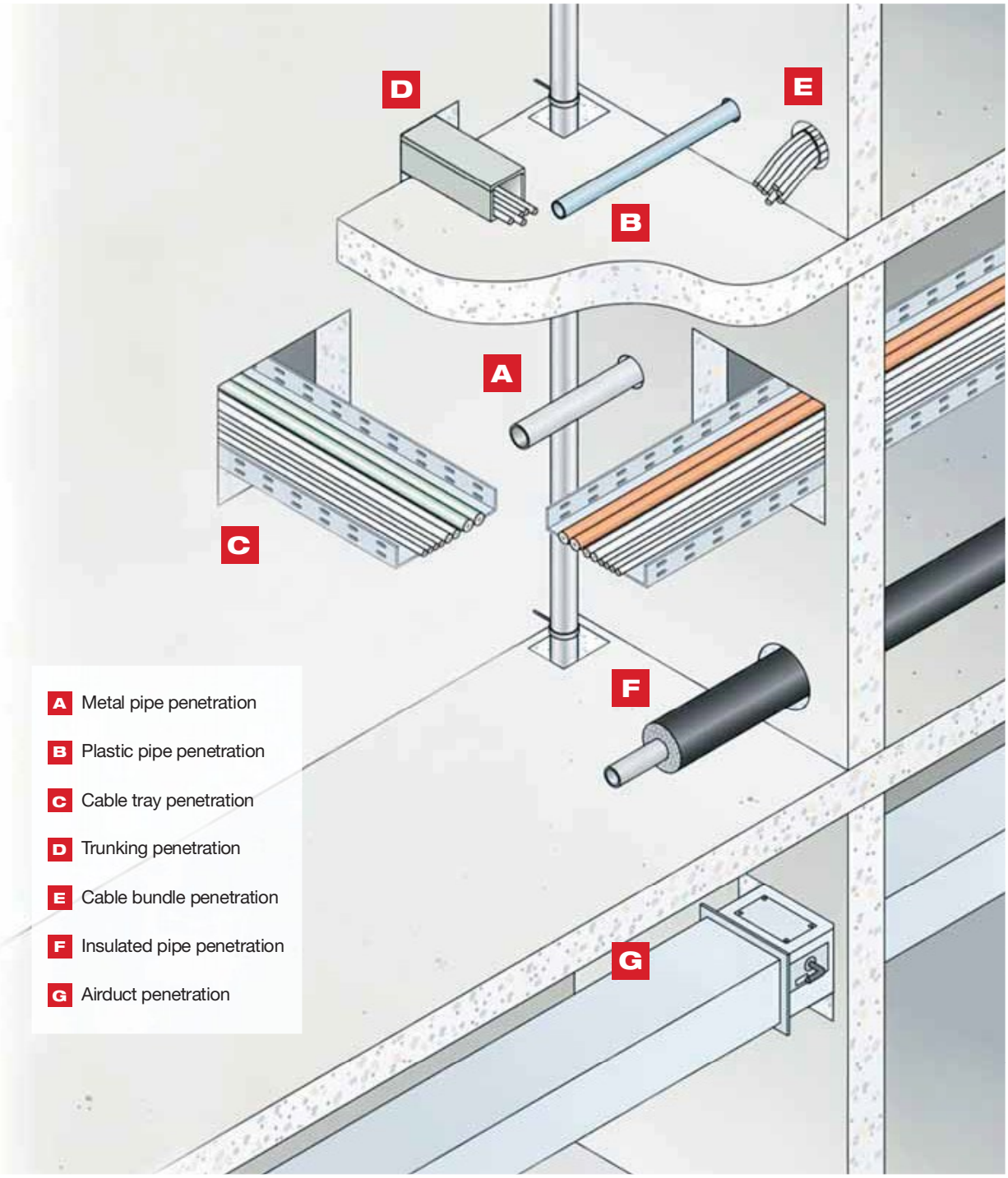

More than just passive fire prevention

Wherever you see these symbols, Hilti firestop products provide additional features or levels of protection in addition to their firestopping properties:

Smoke /Gas Tightness

Acoustic Insulation

Water Tightness

Resistance to Aging*

(*see remark on Page 237)

Fire risk overview - architectural & internal finish

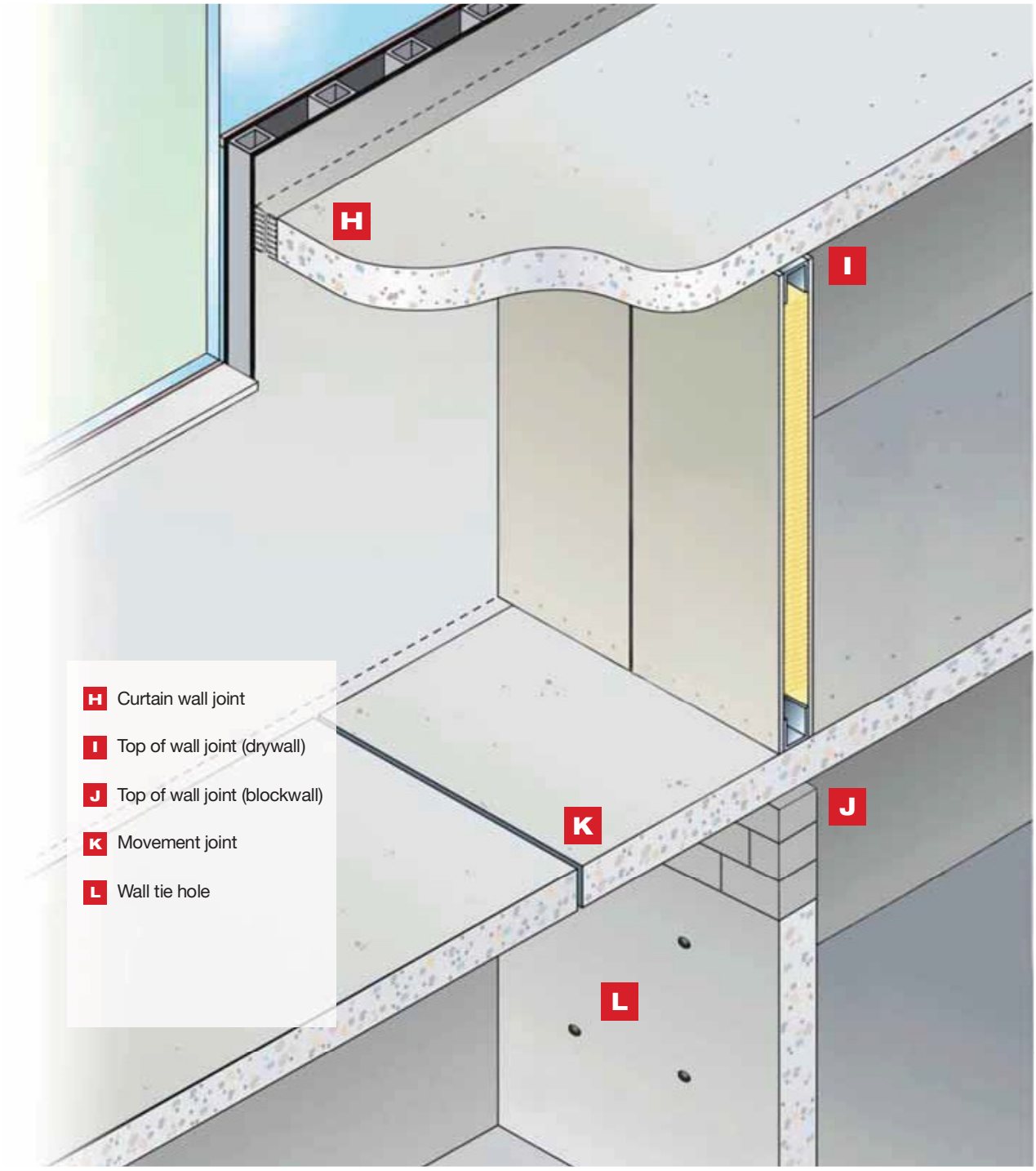

Hilti is dedicated to saving lives through innovation and education

The quality and excellence of Hilti Firestop products help ensure that fire, smoke and toxic gases are contained to reduce the tragic loss of human life and property. Through a combination of superior products, advanced knowledge and unparalleled customer service we are able to provide the highest quality firestop systems.

Hilti offers a comprehensive support package

Throughout the entire firestopping process, whether it is specification, installation or inspection, Hilti will be there to offer jobsite support and expertise. Highly-trained Hilti account managers, Fire Protection Specialists, and in-house Fire Protection engineering team can help you select the correct products and systems to match your specific project needs. Hilti has a support package that is unmatched in the passive firestop industry.

Hilti Firestop
Saving Lives
through innovation
and education

Fire safety

Fire safety is a major concern for all who are responsible for the design and specification of new buildings.

The causes of fire are varied and unpredictable, and often outside the control of the designer. What can be controlled, however, is the effect of fire once it has started.

The control of fire within a building is normally affected by a combination of active and passive fire protection systems.

Active fire protection systems

Active fire protection systems are designed to detect fire, and either to extinguish it by means of water sprinklers, halogen installations or fire extinguishers, or to minimize its effects by smoke ventilation. Active systems are also used to assist the escape of occupants by the provision of alarms and emergency lighting.

Passive fire protection systems

Passive fire protection is designed into the structure of the building, so that if fire breaks out, it is contained within a fire compartment, surrounded by fire-resistive walls and floors. For the walls and floors to maintain their fire-resistance, however, every opening, penetration and joint must be sealed against the escape of fire and smoke.

Intumescent fire seals

The materials used to form the seals must not only fill all gaps at the time of construction, but also, in the event of fire, expand to close any further gaps formed by melted components. These intumescent fire seals, if properly installed, can help prevent fire escaping from a compartment for a rating period of up to four hours. This time period can prove vital in allowing occupants to escape, and firefighters to control the fire.

Hilti

Around the world Hilti red is a familiar sight on building sites, and the Hilti name is known and respected.

To most people, Hilti means precision tools and secure fastenings. For many years however, Hilti has applied their skills to a critical area of construction where precision and security are vital: firestopping.

Hilti Firestop Systems

The aim of Hilti firestop systems is to provide designers and specifiers with the following:

- Excellence — finished solutions that match the well known, high quality standards associated with the Hilti product
- Easy installation — all firestop components are readily available and simple and fast to install
- Tested and used worldwide — Hilti offers ‘one-stop’ firestopping systems tested in accordance with most relevant regulations
- Wide ranging solutions — for virtually any opening or penetration through which heat or smoke might pass, Hilti offers a firestop solution that will help minimize damage in the event of a fire

Hilti customized solutions

If none of the standard firestop systems meet the requirements of the design, Hilti is ready to offer their expertise and work with the designer to produce customized solutions.

Product Information and Installation Instructions 5

CP 601S Elastomeric Firestop Sealant 6
CP 606 Flexible Firestop Sealant 7
CP 617 Firestop Putty Pad 8
CP 620 Fire Foam 9
CP 636 Firestop Mortar 10
CP 643N Firestop Collar. 11
CP 644 Firestop Collar 12
CP 648-E Firestop Wrap Strip 13
FS 657 Fire Block 14
FS-ONE Intumescent Firestop Sealant 15
CFS-SP WB Firestop Joint Spray 16

Selection Chart 17

Hilti Firestop
Saving Lives
through innovation
and education

CP 601S
Elastomeric Firestop Sealant

Product description

- A silicone based firestop sealant that provides maximum movement in fire-rated joints and seals through-penetration applications

Product features

- Halogen and solvent free
- Asbestos free
- Simple to use and apply
- Good adhesion without use of a primer
- Smoke, fume, water and UV resistant
- Excellent movement capability, meets 500 cycle requirements (ASTM E 1966 and UL 2079)
- Meets Class I W-rating requirements
- Meets LEED™ requirements for indoor environmental quality credit 4.1 Low Emitting Materials, Sealants and Adhesives and 4.2 Paints and Coatings

Areas of application

- Sealing construction/expansion joints
- Top-of-wall joints
- Metal pipes
- Cable bundles
- HVAC penetrations

For use with

- Various base materials such as masonry, concrete, metal, glass, etc.
- Wall and floor assemblies rated up to 4 hours

Examples

- Where a gypsum wall assembly meets the underside of a metal or concrete deck
- Sealing expansion joints to impede the passage of fire, smoke and toxic fumes
- Sealing around HVAC penetrations through fire-rated assemblies

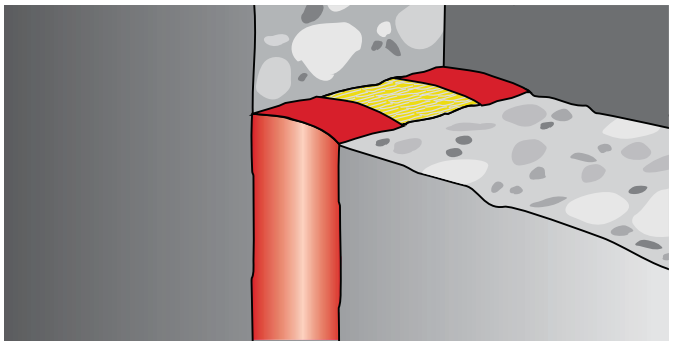

Technical Data*	CP 601S
Chemical basis	Neutral elastic silicone
Density	Approx. 1.25 g/cm³
Color	Red
Application temperature	40°F to 104°F (5°C to 40°C)
Skin-forming time	Approx. 15 min.
Curing time	Approx. 2 mm / 3 days
Volume shrinkage	Approx. 0 – 5%
Movement capability	Approx. 25%
Temperature resistance	–40°F to 320°F (–40°C to 160°C)
Surface burning characteristics (ASTM E84-96)	Flame spread: 0 Smoke development: 30
Sound transmission classification (ASTM E 90-97)	50 (Relates to specific construction)

Approvals

- California State Fire Marshal - No. 1451-1200:115
  No. 1452-1200:113
  No. 4485-1200:123
- City of New York - MEA 101-99-M, Vol. IV

Tested in accordance with

- UL 2079
- ASTM E 814
- ASTM E 1966
- ASTM C 920
- UL 1479
- ASTM E 84

*At 73°F (23°C) and 50% relative humidity

CLASSIFIED C UL US
FILL, VOID OR CAVITY MATERIAL
FOR USE IN THROUGH-PENETRATION
FIRESTOP SYSTEMS AND
JOINT SYSTEMS
SEE UL FIRE RESISTANCE DIRECTORY
66Y7

FM APPROVED

W rated

Installation instructions for CP 601S

Notice

- Before handling, read Material Safety Data Sheet and product label for safe usage and health information.
- Instructions below are general guidelines — always refer to the applicable drawing in the UL Fire Resistance Directory or Hilti Firestop Systems Guide for complete installation information

Opening

1. Clean the opening. Surfaces to which CP 601S will be applied should be cleaned of loose debris, dirt, oil, wax and grease. The surface should be moisture and frost free.

Application of firestop

2. Insert fill of mineral wool (or backer as required).
3. Apply firestop over backer.
4. Smooth firestop sealant with a trowel before the skin forms. Once cured, CP 601S can only be removed mechanically.
5. For maintenance reasons, a penetration seal can be permanently marked with an identification plate and fastened in a visible position next to the seal.

Chemical resistance

- At room temperature the cured silicone sealant is resistant for a short time to diluted (15%) acids and lyes/alkalis as well as most commercially available cleaning agents and disinfectants (except those containing iodine)
- Concentrated acids and lyes/alkalis destroy silicone rubber over time.
- Solvents and mineral oils cause cured silicone to swell. Consequently, proper functioning of the sealant should be checked after exposure to a solvent or mineral oil. Please contact your local sales representative or the nearest Hilti center if special requirements for chemical resistance have to be met.

Not for use

- In areas immersed in water
- Not to be painted

Storage

- Store only in the original packaging in a location protected from moisture at a temperature of 40°F to 77°F (5°C to 25°C)
- Observe expiration date on package

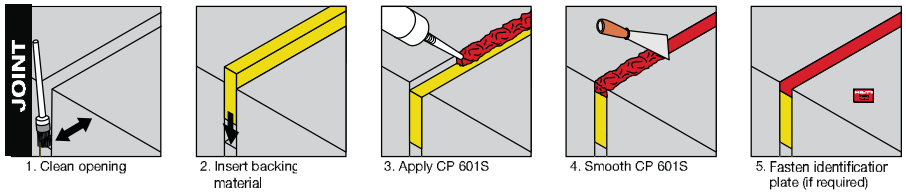

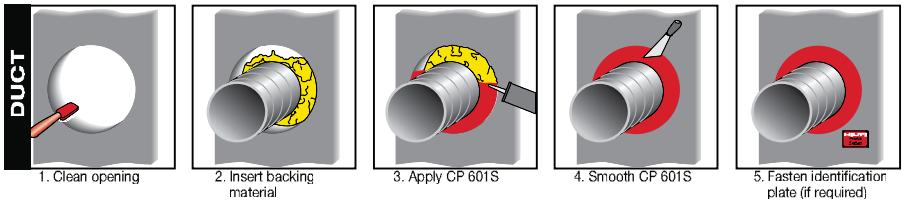

CP 606
Flexible Firestop Sealant

Product description
- An acrylic based firestop sealant that provides movement capability in fire rated joints and seals through-penetrations applications

Product features
- Silicone free
- Halogen, asbestos and solvent free
- Paintable
- Meets 500 cycle requirements (ASTM E 1966 and UL 2079)
- Smoke and fume resistant
- Easy clean up with water
- Single component systems available
- Meets LEED™ requirements for indoor environmental quality credit 4.1 Low Emitting Materials, Sealants and Adhesives and 4.2 Paints and Coatings

Areas of application
- Sealing construction/expansion joints
- Top-of-wall joints
- Metal pipes
- Cable bundles
- HVAC penetrations

For use with
- Various base materials such as masonry, concrete, gypsum, etc.
- Wall and floor assemblies rated up to 3 hours

Examples
- Where a gypsum wall assembly meets the underside of a metal or concrete deck
- Sealing expansion joints to impede the passage of fire, smoke and toxic fumes
- Sealing around HVAC penetrations through fire-rated assemblies

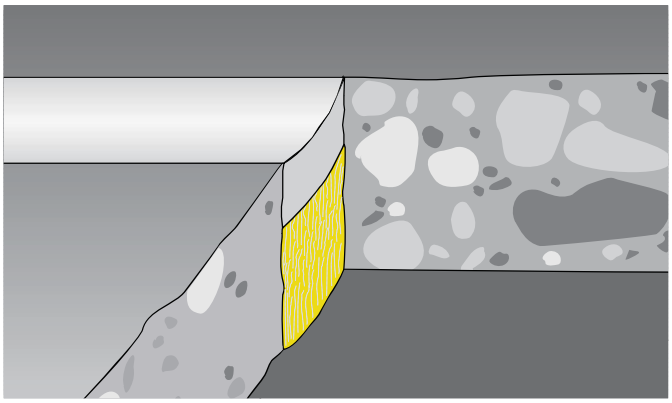

Technical Data*	CP 606
Chemical basis	Acrylic based firestop sealant
Color	Available in red, white and gray
Application temperature	40°F to 104°F (5°C to 40°C)
Skin-forming time	Approx. 15 min
Curing time	Approx. 3 mm / 3 days
Volume shrinkage	Less than 20%
Movement capability	Approx. 10%
Temperature resistance	–22°F to 176°F (–30°C to 80°C)
Surface burning characteristics (ASTM E 84-96)	Flame Spread: 10 Smoke Development: 0
Sound transmission classification (ASTM E 90-99)	56 (Relates to specific construction)

Approvals
- California State Fire Marshal - No. 1452-1200:112
  No. 1451-1200:12
  No. 4485-1200:132
- City of New York - MEA 100-99-M

Tested in accordance with
- UL 2079
- ASTM E 814
- ASTM E 1966
- ASTM E 84
- UL 1479

*At 73°F (23°C) and 50% relative humidity

CLASSIFIED C UL US
FILL, VOID OR CAVITY MATERIAL
FOR USE IN THROUGH-PENETRATION
FIRESTOP SYSTEMS AND
JOINT SYSTEMS
SEE UL FIRE RESISTANCE DIRECTORY
66Y7

FM APPROVED

Installation instructions for CP 606

Notice
- Before handling, read Material Safety Data Sheet and product label for safe usage and health information.
- Instructions below are general guidelines — always refer to the applicable drawing in the UL Fire Resistance Directory or Hilti Firestop Systems Guide for complete installation information

Opening
1. Clean the opening. Surfaces to which CP 606 will be applied should be cleaned of loose debris, dirt, oil, wax and grease. The surface should be moisture and frost free.

Application of firestop
2. Insert fill of mineral wool or backer (as required).
3. Apply firestop over backer.
4. Smooth firestop sealant with a trowel before the skin forms. Once cured, CP 606 can only be removed mechanically.
5. For maintenance reasons, a penetration seal can be permanently marked with an identification plate and fastened in a visible position next to the seal.

Not for use
- On areas immersed in water

Storage
- Store only in the original packaging in a location protected from moisture at a temperature of 40°F to 77°F (5°C to 25°C)
- Observe expiration date on package

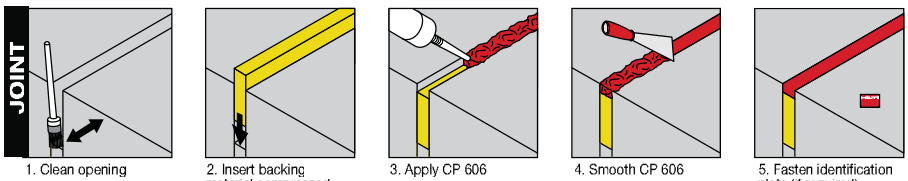

1. Clean opening
2. Insert backing material compressed per UL System
3. Apply CP 606
4. Smooth CP 606
5. Fasten identification plate (if required)

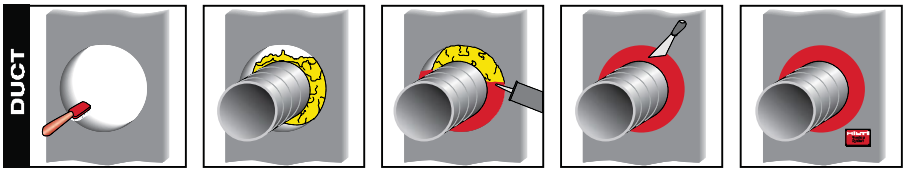

1. Clean opening
2. Insert backing material
3. Apply CP 606
4. Smooth CP 606
5. Fasten identification plate (if required)

Hilti Firestop
Saving Lives
through innovation
and education

CP 617, CP 617L and CP 617XL Firestop Putty Pad

Product description
- A moldable firestop putty designed to help protect electrical outlet boxes

Product features
- Applied by hand
- Fast installation

Areas of application
- Protection of electrical outlet boxes

For use with
- Gypsum wall assemblies with wood or metal studs

Examples
- Where two outlets are within a single stud/cavity or within 24" measured horizontally (not back to back unless specified by the specific UL approval)

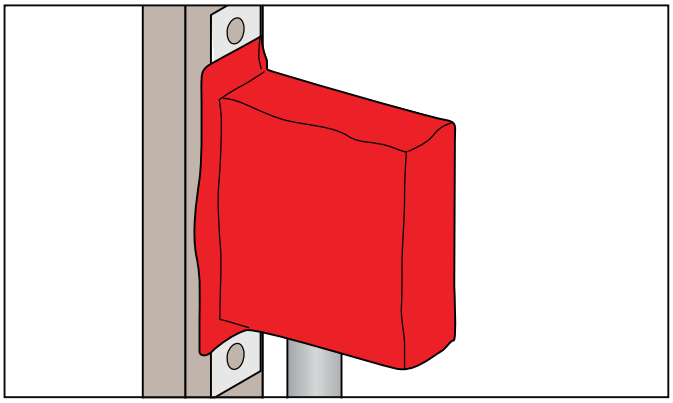

Technical Data*	CP 617
Dimensions (LxWxH)	CP 617: 6" x 7" x 1/8" (15 x 18 x 0.3 cm) CP 617L: 7" x 7" x 1/8" (18 x 18 x 0.3 cm) CP 617XL: 9" x 9" x 1/8" (23 x 23 x 0.3 cm)
Consistency	Moldable putty
Color	Red
Application temperature	40°F (5°C) to 95°F (35°C)
Storage temperature	40°F (5°C) to 104°F (40°C)
Curing time	Non-curing
Density	1.48 g/cm³
Intumescent activation	Approx. 220°F to 250°F (104°C to 121°C)
Volatile solvents	None
Asbestos fibers	None
Surface burning characteristics (ASTM E 84-96)	Flame Spread: 15 Smoke development: 10
Sound transmission classification (ASTM E 90-97)	59 (Relates to specific construction)
Approvals • California State Fire Marshal - No. 4485-1200:129 • City of New York - MEA 102-99-M	
Tested in accordance with • UL 263 • ASTM E 84	

*At 73°F (23°C) and 50% relative humidity

CLASSIFIED c UL us
WALL OPENING PROTECTIVE MATERIAL
FIRE RESISTANCE CLASSIFICATION
SEE PRODUCT CATEGORY IN
UL FIRE RESISTANCE DIRECTORY
66Y7

FM APPROVED

Installation instructions for CP 617 (except for the side of the outlet box against the stud)

Notice
- Before handling, read Material Safety Data Sheet and product label for safe usage and health information.
- Instructions below are general guidelines — always refer to the applicable listing (CLIV) in the UL Fire Resistance Directory or Hilti Firestop Systems Guide for complete installation information

Application of firestop putty
1. After ensuring box is cleaned of loose debris, dirt oil, moisture, frost and wax, remove label from one side of pad. For a 1 to 2 hour fire rating, one CP 617 pad is required. Exposed side of pad is placed against box.
2. CP 617 Firestop Putty Pads are to be installed to completely cover the exterior surfaces of the outlet box (except for the side of the outlet box against the stud) and completely seal against the stud within the stud cavity.
3. Reshape CP 617 to fit around conduit or cables.
4. Press CP 617 to all sides of electrical box.
5. Remove other side of label.

Not for use
- In areas exposed to water

Storage
- Store only in the original packaging in a location at temperatures 40°F (5°C) to 104°F (40°C)

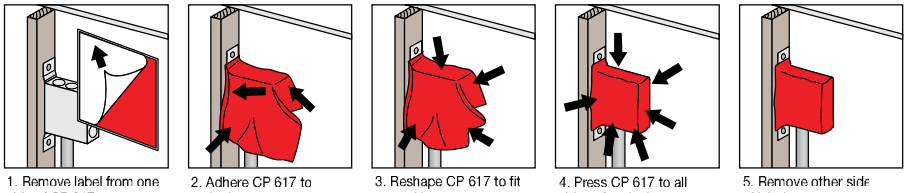

1. Remove label from one side of CP 617
2. Adhere CP 617 to outlet box
3. Reshape CP 617 to fit around box
4. Press CP 617 to all sides of outlet box
5. Remove other side of label

Hilti Firestop
Saving Lives through innovation and education

CP 620
Fire Foam

Product description
- Innovative firestopping solution for complex applications

Product features
- Up to 6 times expansion of can yield
- Repenetrable
- Cures within 60 seconds
- Easy handling for difficult to reach applications
- Paintable
- Virtually impervious to smoke
- Mold resistant
- No additional materials required
- Execllent water vapor resistance
- Meets LEED™ requirements for indoor environmental quality credit 4.1 Low Emitting Materials, Sealants and Adhesives and 4.2 Paints and Coatings

Areas of application
- Sealing small to medium size openings
- Cables and cable trays
- Non-combustible pipes
- Combustible pipes when used in conjunction with Hilti Wrap Strips
- Where cables, steel, copper, cast iron or plastic pipes all pass through the same opening

For use with floor and wall assemblies
- Concrete, drywall and masonry

Examples
- Multiple penetrations
- Insulated metal pipes

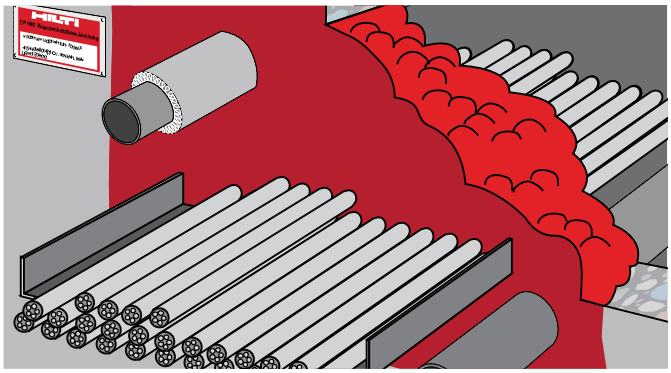

Technical Data*	CP 620
Chemical basis	Two component polyurethane
Color	Red
Fire foam yield	Up to 110 in³
Application temperature	Substrate: 32°F to 104°F (0°C to 40°C) Product: 50°F to 104°F (10°C to 40°C)
Curing time*	Non-tacky after Approx. 35 seconds Ready to cut after Approx. 1 minute
Thermal insulation (R-value)	2.8–3.0 per inch of thickness
Temperature resistance of cured foam	–22°F to 212°F (–30°C to 100°C)
Sound transmission classification (ASTM E90-97)	50 (Relates to specific construction)
Structure-borne sound insulation	Pipe/wall 30–50%
Surface burning characteristics (ASTM E84-01)	Flame spread: 0 Smoke development: 15
Approvals • California State Fire Marshal - No. 4485-1200:119 • City of New York - MEA 238-02-M	
Tested in accordance with • UL 1479 • ASTM E 814 • ASTM E 84	

*At 73°F (23°C) and 50% relative humidity

C UL US CLASSIFIED — FILL, VOID OR CAVITY MATERIAL FOR USE IN THROUGH-PENETRATION FIRESTOP SYSTEMS SEE UL FIRE RESISTANCE DIRECTORY 36Y7

FM APPROVED

W rated SYSTEMS AVAILABLE

Installation instructions for CP 620

Notice
- Before handling, read Material Safety Data Sheet and product label for safe usage and health information.
- Instructions below are general guidelines — always refer to the applicable drawing in the UL Fire Resistance Directory or Hilti Firestop Systems Guide for complete installation information

Application
1-4.

Prepare dispenser and cartridges as shown below. The Fire Foam from the first few strokes of the dispenser should be discarded until the Fire Foam in the mixer has a consistent red color.

5. Apply the CP 620 Fire Foam in the opening.
   - Begin applying CP 620 Fire Foam at the back of the opening and work toward the front. Fill the opening completely with CP 620 Fire Foam.
   - When dispensed slowly, the Fire Foam can be easily built up.
   - When dispensed quickly, the consistency of the Fire Foam is more liquid allowing it to flow better between the cables. Note: The CP 620 Fire Foam becomes warm for a short time after application.
6. For maintenance reasons, the application can be permanently marked with an installation plate. Mark the installation plate and fasten it in a visible position next to the seal.

Re-installing cables or pipes
- Additional cables or pipes can be installed later without difficulty.
- Use a suitable tool to create an opening. Push the cable or pipe through and then seal the remaining opening carefully with CP 620 Fire Foam.

Notes
- The CP 620 Fire Foam can be cut back to no less than the minimum specified installation depth (see applicable UL systems for depths).
- Pieces of cured excess CP 620 Fire Foam which have been cut off can be laid in the next opening and fresh CP 620 Fire Foam can be applied around these.

Not for use
- Exposed to weather
- Exposed to UV

Storage
- Store only in the original packaging in a dry place at a temperature of 40°F to 77°F (5°C to 25°C). See technical data for application and substrate temperatures. Partly-usec cartridges can be stored with mixer attached until they are required again. When re-using a partially used cartridge, simply attach a new mixer and dispense accordingly.

1. Hold the cartridge in the upright position and unscrew the cap.

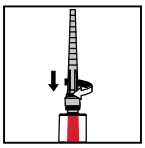

2. Fit the mixer and screw in a clockwise motion until secure.

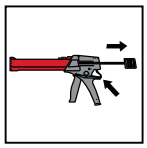

3. Release the dispenser and pull back the piston rod.

4. Insert the cartridge in the dispenser.

5. Apply CP 620 Fire Foam, building up a seal by working from the back towards the front.

6. Attach the installation plate (if required).

Hilti Firestop
Saving Lives through innovation and education

Firestop mortar
CP 636

A fire resistant, cement based compound with thermal insulating properties for sealing small to large sized openings

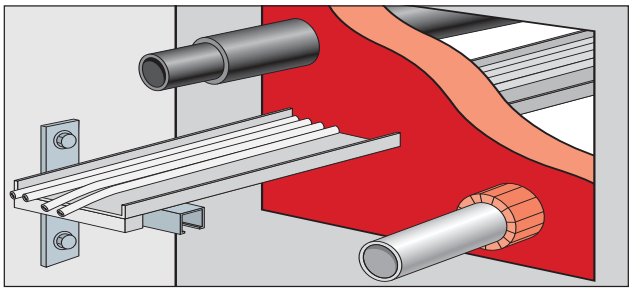

Applications

- Lift door frame / Indicator panel application
- Cable tray penetration
- Busway penetration
- Multiple penetration

Product Features

- High yield
- Stiff (formwork not always required)
- Contains no asbestos, phenol or halogen constituents
- Good adhesion to steel, concrete and masonry

Advantages

- Paintable
- Simple application by trowel

Consumption Guide

20 kg bags yield 22.2 litres
a = opening depth in cm
b = opening length in cm
c = opening width in cm

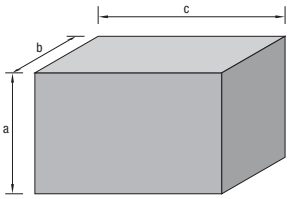

Blank Opening

Number of bags required $= \frac{a \times b \times c}{22{,}000}$

e.g. 100 mm thick floor with 1 metre x 1 metre opening:
Therefore number of bags required $= \frac{10 \times 100 \times 100}{22{,}000} = 5$ bags

Technical data (at 23°C and 50% relative air humidity)

	CP 636
Base materials	Concrete and masonry
For use in	Walls and floors
Fire rating	Up to 4 hours
Colour	Grey
Storage Temperature	5°C to 30°C
Application temperature	5°C to 45°C
Mix ratio (by volume)	3:1 (mortar to water)
Volume of water for mixing (per 20 kg mortar)	9.8 L
Form removal (depending on consistency)	after 2 to 4 hours (walls) after 2 to 12 hours (floors)
Bulk density	680 kg / m³
Density of hardened mortar	820 kg / m³
Compressive strength (after 28 days at 23°C)	2.9 N / mm²
Material class as per DIN 4102, P.1	A1 (fire reaction)
Shelf-life after production	12 months (at 20°C in a dry place)

Acoustic

British Standard BS 476-20 | BS EN 1366-3 | LPCB | FM APPROVED | cULus

(Macau Local FSD Approved)

Application Procedure

1. Clean opening, moisten surfaces

2. Mix CP 636 mortar (by adding mortar to water)

3. Put mortar into place

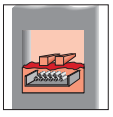

4. Optional: add CP 651 or CP 657 for future cable changes

5. Fasten installation plate in place (if required)

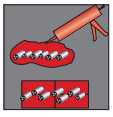

6. Re-installation: lay cables and close remaining opening

Ordering

Order designation	Packaging content (pcs)	Item No.
CP 636-20 firestop mortar 20 kg sack	1	00334897

CP 643N
Firestop Collar

Product description
- A ready-to-use firestop collar, made of a galvanized steel housing and intumescent inserts for firestopping combustible pipes

Product features
- Ready-to-use collar
- No construction required
- Fast installation time
- Adjustable mounting tabs
- Low profile for tight installations

Areas of application
- Firestopping combustible pipes up to 6" diameter in penetrations through fire walls and floors
- Suitable for the following pipe materials:
- PVC, CPVC, ABS, PVDF, PP and FRPP

For use with
- Concrete, masonry, wood floor and gypsum wall assemblies
- Wall and floor assemblies rated up to 4 hours

Types of installation
- Wall: two collars, one on each side
- Floor: one collar on underside (bottom)

Example
- Waste water pipes
- Fresh water pipes

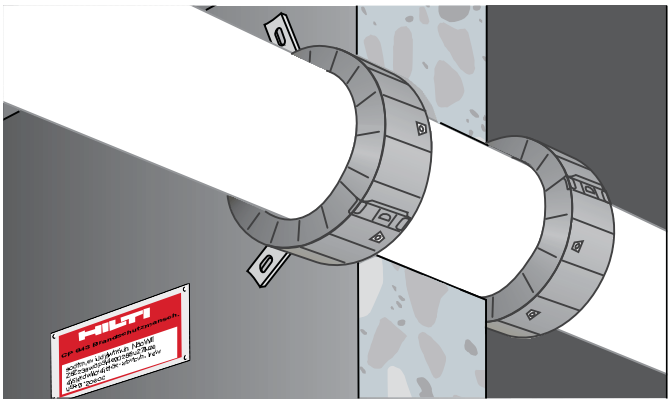

Technical Data		CP 643N		
Description	Pipe outside dia (in.)	Collar outside dia. (in.)	Collar Height (in.)	No. of hooks and fasteners
CP 643-50/1.5"N	1.4–2.0	2.8	0.9	2
CP 643-63/2"N	2.0–2.5	3.4	1.3	2
CP 643-90/3"N	2.6–3.6	4.9	1.7	3
CP 643-110/4"N	3.6–4.5	6.0	1.9	3
CP 643-160/6"N	6.6	9.8	1.9	4
Temperature resistance		-40°F to 140°F (-40°C to 60°C)		
Intumescent activation		Approx. 392°F (200°C)		
Expansion ratio (unrestricted)		Up to 1:10		

Approvals
- California State Fire Marshal - No. 4485-1200:113
  No. 4485-1200:131
- City of New York - MEA 630-06-M

Tested in accordance with
- UL 1479 • ASTM E 814

CLASSIFIED C UL US
FIRESTOP DEVICE
FOR USE IN THROUGH-PENETRATION FIRESTOP SYSTEMS
SEE UL FIRE RESISTANCE DIRECTORY 5N76

FM APPROVED

FCG -BM- CZ SYSTEM COMPATIBLE

Installation instructions for CP 643N

Notice
- Before handling, read Material Safety Data Sheet and product label for safe usage and health information.
- Instructions below are general guidelines — always refer to the applicable drawing in the UL Fire Resistance Directory or Hilti Firestop Systems Guide for complete installation information

Opening
1. Clean the plastic pipes. Expansion of the intumescent material during a fire acts to close the plastic pipe. Very dirty pipes (ie: with remains of mortar) may lead to a delay in this closing action. Soiled plastic pipes should, therefore, be cleaned in the area where the CP 643N Firestop Collar is to be installed.

Application of firestop system
2. Seal the opening if required. Gaps may be closed with FS-ONE. The approved methods vary and are given in the specific UL system.
3. Close the CP 643N Firestop Collar. Place the CP 643N Firestop Collar around the plastic pipe and lock the closure by applying firm pressure until it latches.
4. Attach fastening hooks. The fastening hooks can be attached to various points on the metal housing. This allows the fastening points to be made to suit the space available in each case. The hooks must be positioned as symmetrically as possible. The required number of fastening hooks is indicated on the packaging.
5. Fastening the CP 643N Firestop Collar. Only when fastened properly can CP 643N offer protection against fire.

a. Mark the fastening points.
b. Drill holes with a Hilti rotary hammer drill (i.e. TE 4-A18) or, depending on base material, fasten using Hilti powder-actuated tool.
c. To secure the CP 643N Firestop Collar, use Hilti anchors/fasteners.
d. For maintenance reasons, a penetration can be permanently marked with an identification plate and fastened in a visible position next to the seal.

Not for use
- With metal pipes
- In highly corrosive surroundings
- With unapproved anchors/fasteners

Storage
- Store only in the original packaging in a location protected from moisture

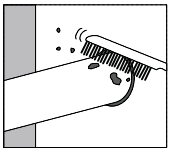
1. Clean plastic pipe.

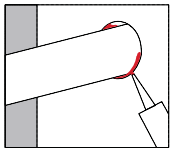
2. Close remaining gap to provide smoke and gas resistant seal.

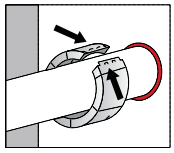
3. Close collar.

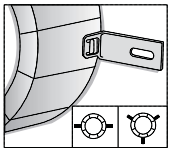
4. Attach fastening hooks.

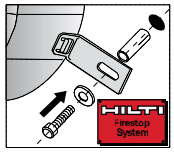

5. Fasten collar and identification plate (if required).

Hilti Firestop
Saving Lives
through innovation
and education

CP 644
Firestop Collar

Product description
- A ready-to-use firestop collar, made of galvanized steel housing and intumescent inserts for firestopping large combustible pipes

Product features
- Ready-to-use collar
- No construction required
- Fast installation time
- Adjustable/moveable fastening tabs

Areas of application
- Sealing of penetrations for combustible pipes from 8" to 10" in diameter
- Vented or closed pipe
- PVC or CPVC pipe

For use with
- Concrete, masonry, and gypsum walls
- Wall and floor assemblies rated up to 2 hours

Types of installation
- Wall: two collars, one on each side
- Floor: one collar on underside (bottom)

Examples
- Waste water pipes
- Fresh water pipes

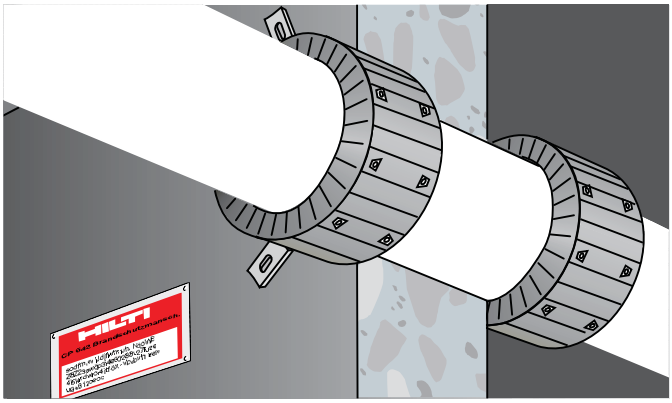

Technical Data		CP 644		
Description	Pipe outside dia (in.)	Collar outside dia. (in.)	Collar Height (in.)	No. of hooks and fasteners
CP 644-200/8"	8.8	10.0	6.9	10
CP 644-250/10"	10.8	12.4	9.1	12
Temperature resistance		-40°F to 140°F (-40°C to 60°C)		
Intumescent Activation		Approx. 392°F (200°C)		
Expansion ratio (unrestricted)		Up to 1:10		

Approvals
- California State Fire Marshal - No: 1185-1200:128
  No: 4485-1200:128
- City of New York - MEA 631-06-M

Tested in accordance with
- UL 1479
- ASTM E 814

CLASSIFIED C UL US
FIRESTOP DEVICE
FOR USE IN THROUGH-PENETRATION FIRESTOP SYSTEMS
SEE UL FIRE RESISTANCE DIRECTORY 5N76

Installation instructions for CP 644

Notice
- Before handling, read Material Safety Data Sheet and product label for safe usage and health information.
- Instructions below are general guidelines — always refer to the applicable drawing in the UL Fire Resistance Directory or Hilti Firestop Systems Guide for complete installation information

Opening
1. Clean the plastic pipes. Expansion of the intumescent material during a fire acts to close the plastic pipe. Very dirty pipes, (ie: with remains of mortar) may lead to a delay in this closing action. Soiled plastic pipes should, therefore, be cleaned in the area where the CP 644 Firestop Collar is to be installed.

Application of firestop system
2. Seal the opening. Gaps must be closed with FS-ONE. The approved methods vary and are given in the specific UL system.
3. Close the CP 644 Firestop Collar. Place the CP 644 Firestop Collar around the plastic pipe and lock the closure by applying firm pressure until it latches.
4. Attach fastening hooks. The fastening hooks can be attached to various points on the metal housing This allows the fastening points to be made to suit the space available in each case.

   The hooks must be positioned as symmetrically as possible. The required number of fastening hooks is indicated on the packaging.
5. Fastening the CP 644 Firestop Collar. Only when fastened properly can CP 644 offer protection against fire passing through.
   a. Mark the fastening points.
   b. Drill holes with a Hilti rotary hammer drill (i.e. TE 4-A18) or, depending on base material, fasten using Hilti powder-actuated tool.
   c. To secure the CP 644 Firestop Collar, use Hilti anchors/fasteners.
   d. For maintenance reasons, a penetration can be permanently marked with an identification plate and fastened in a visible position next to the seal.

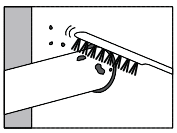
1. Clean plastic pipe

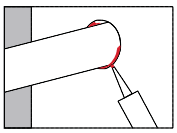
2. Close remaining gap to provide smoke and gas resistant seal

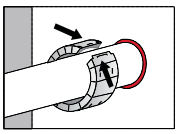
3. Close collar

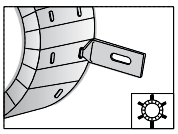
4. Attach fastening hooks

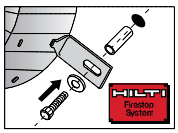

5. Fasten collar and identification plate. (If required)

Not for use
- With metal pipes
- In highly corrosive surroundings
- With unapproved anchors/fasteners

Storage
- Store only in the original packaging in a location protected from moisture

Hilti Firestop
Saving Lives through innovation and education

CP 648-E
Firestop Wrap Strip

Product description
- An intumescent, flexible firestop wrap strip for plastic and insulated pipe penetrations

Product features
- Highly Intumescent
- Long length avoids waste
- Can be continuously wrapped
- Cost effective
- Quick and easy closure without tools
- Ideal for very tight installations

Areas of application
- Firestopping combustible pipe penetrations
- Difficult applications where space is limited
- Penetrations through concrete over metal deck
- Plastic and insulated penetrations using PVC, CPVC, ABS, FRPP and PEX

For use with
- Concrete, masonry, wood floor and gypsum wall assemblies
- Wall and floor assemblies rated up to 4 hours

Examples
- Waste water pipes
- Fresh water pipes
- Decking penetrations

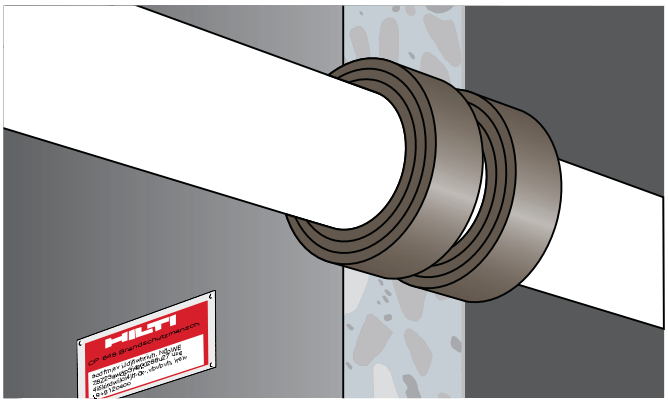

Technical Data*	CP 648-E
Density	Approx. 1.35 g/cm³
Dimensions (approximate)	3/16" x 1" x 33 ft or 3/16" x 1-3/4" x 33 ft
Color	Black with foil backing
Temperature resistance	-40°F to 212°F (-40°C to 100°C)
Intumescent activation	Approx. 320°F (160°C)
Expansion ratio (unrestricted)	1:40

Approvals
•California State Fire Marshal - No: 4485-1200:126
• City of New York - MEA 313-07-M

Tested in accordance with
• UL 1479 • ASTM E 814

*At 73°F (23°C) and 50% relative humidity

CLASSIFIED C UL US
FILL, VOID OR CAVITY MATERIAL FOR USE IN THROUGH-PENETRATION FIRESTOP SYSTEMS SEE UL FIRE RESISTANCE DIRECTORY 66Y7

FM APPROVED

FCG -BM- CZ SYSTEM COMPATIBLE

Installation instructions for CP 648-E

Notice
- Before handling, read Material Safety Data Sheet and product label for safe usage and health information.
- Instructions below are general guidelines — always refer to the applicable drawing in the UL Fire Resistance Directory or Hilti Firestop Systems Guide for complete installation information

Opening
1. Clean the plastic or insulated pipe penetration. Expansion of the intumescent material during a fire closes the plastic or insulated pipe penetration. Very dirty pipes (ie: with remains of mortar) may lead to a delay in this closing action. Soiled plastic pipes or insulated pipe penetrations should, therefore, be cleaned in the area where the CP 648-E Firestop Wrap Strip is to be installed.

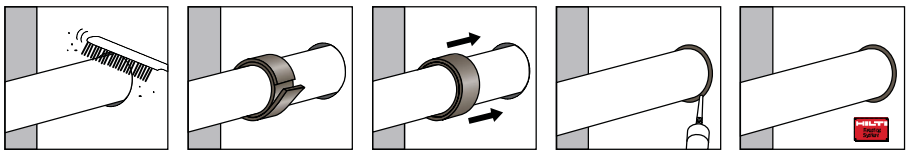

1. Clean penetration
2. Wrap strips around pipe the specified number of times
3. Push Wrap Strips into hole
4. Seal penetration against smoke with FS-ONE
5. Fasten installation plate (If required)

Application of firestop system
2. Tightly wrap the required number of strips continuously around the penetrant, and hold in place with tape.
3. Push the Hilti Wrap Strip into the opening until it is flush with the substrate surface unless otherwise required by the UL system. It may be required by the UL system to clamp, wire or use a Hilti Retaining Collar to secure the wrap strip in place for some applications.
4. If the UL system requires a cold smoke seal, then apply the proper amount of Hilti FS-ONE sealant in the opening over the wrap strip.
5. For maintenance reasons, a penetration seal can be permanently marked with an identification plate and fastened in a visible position next to the seal.

Not for use
- In highly corrosive surroundings
- With unapproved retaining collars, anchors/fasteners
- Outdoors

Storage
- Store only in the original packaging in a location protected from moisture at temperatures between 23°F and 86°F (-5°C and 30°C).

Hilti Firestop
Saving Lives through innovation and education

Firestop Block (CFS-BL)

Product description

- Ready-to-use, intumescent flexible block designed to seal medium to large size openings

Product features

- Integrated “Grid-Tech” increases Annular Space up to 12”
- Suitable for re-penetration or new penetrations
- Economical to use with short installation times
- Easy installation — no special tools required
- Ideal for use in floors — no forming required
- One sided wall systems available
- Halogen, asbestos and solvent free
- Operational immediately after installation
- Smoke resistant

Areas of application

- Sealing single or multiple penetrations in small to large openings
- Temporary or permanent sealing of cables and cable tray penetrations
- Temporary or permanent sealing of insulated and non-insulated metallic pipes and combustible pipe penetrations

For use with

- Walls (UL tested up to max. opening 72" x 36")
- Floors (UL tested up to max. opening 72" x 36")
- Concrete, porous concrete, masonry and gypsum wall assemblies
- Wall assemblies rated up to 4 hours
- Floor assemblies rated up to 3 hours

Examples

- Completely dust and fiber free rooms and places where electrical installations are frequently used (ie: computer centers, hospitals, laboratories, etc.)
- New buildings in the construction phase and during renovation
- Large openings containing multiple penetrations as found in production bays, warehouses, hospitals etc.

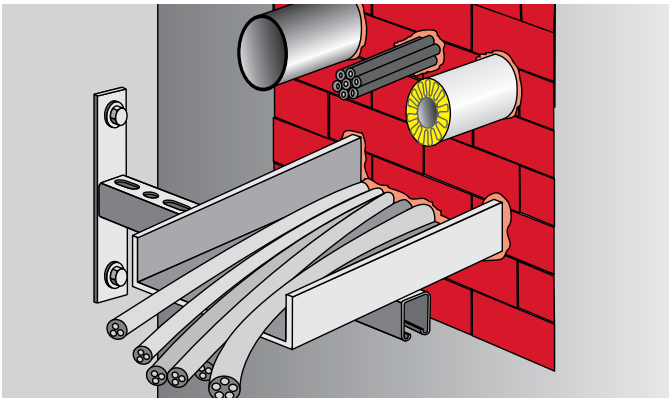

Technical Data*	CFS-BL
Color	Red
Application temperature	40° F to 104° F (5° C to 40° C)
Temperature resistance	5° F to 140° F (-15° C to 60° C)
Intumescent activation	Approx. 392° F (200° C)
Expansion ratio (unrestricted)	Up to 1:3
Surface burning characteristics (ASTM E 84-10b)	Flame Spread Index: 10 Smoke Development Index: 15
Sound transmission classification (ASTM E 90)	STC Rating: 52
Tested in accordance with • UL 1479 • ASTM E 814 • ASTM E 84	

*At 73°F (23°C) and 50% relative humidity

CLASSIFIED c UL us

FILL, VOID OR CAVITY MATERIALFOR USE IN THROUGH-PENETRATION FIRESTOP SYSTEMS
SEE UL FIRE RESISTANCE DIRECTORY
66Y7

FM APPROVED

Installation instructions for Firestop Block CFS-BL

Notice

- Before handling, read Material Safety Data Sheet and product label for safe usage and health information.
- Instructions below are general guidelines — always refer to the applicable drawing in the UL Fire Resistance Directory or Hilti Firestop Systems Guide for complete installation information

Opening

1. Clean the opening. Penetration and penetration supporting structures must be installed in compliance with local building and electrical standards.

Application of Firestop Blocks

2a. If no penetrations are located, build up Firestop Block CFS-BL, firmly seated, within opening.

2b. If penetrations are located, build up Firestop Block CFS-BL, firmly seated, while cutting blocks with a knife to suit the placed penetrations.

3. Finish building up Firestop Blocks until entire opening is filled.
4. Completely fill cable spaces, gaps between blocks and pipes, and joints with FS-ONE Firestop Sealant (as required).
5. For maintenance reasons, a penetration seal could be permanently marked with an identification plate. In such a case, mark the identification plate and fasten it in a visible position next to the seal.

Re-installing cables or other penetrations

- Remove or cut the block from the seal.
- Install the penetrant and re-lay the block in compliance with the approval. Fill gaps and spaces with FS-ONE Firestop Sealant (as required).

  Single cables can be run through joints between blocks or a hole can be drilled through a block using a sharpened piece of metal pipe or tubing.

Not for use

- In wet rooms, outdoors or exposed to the weather or UV radiation (can be done only after applying an additional silicone coating, i.e. CP 601S).

Storage

- Store only in the original packaging in a location protected from moisture and direct sunlight

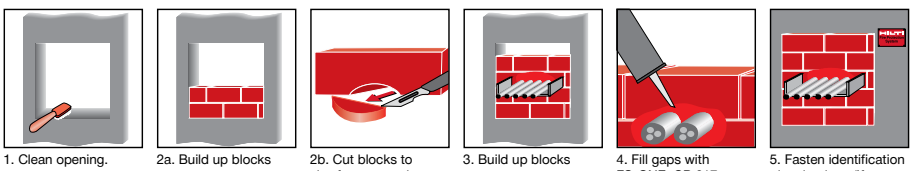

1. Clean opening. 2a. Build up blocks 2b. Cut blocks to size for penetrations in place 3. Build up blocks 4. Fill gaps with FS-ONE, CP 617 or CP 618 putty (as required). 5. Fasten identification plate in place (If required)

Hilti Firestop
Saving lives through innovation and education

FS-ONE MAX
High Performance Intumescent Firestop Sealant

Product description

- Intumescent (expands when exposed to fire) firestop sealant that helps protect combustible and non-combustible penetrations for up to 4 hours fire ratirg

Product features

- Smoke, gas and water resistant after material has cured
- Contains no halogen, solvents or asbestos
- High fire rating properties
- Water based, easy to clean
- Protects most typical firestop penetration applications
- Paintable
- Single component systems available
- Meets LEED™ requirements for indoor environmental quality credit 4.1 Low Emittirg Materials, Sealants and Adhesives and 4.2 Paints and Coatings

Areas of application

- Steel, copper and EMT pipes
- Insulated steel and copper pipes
- Cable bundles
- Closed or vented plastic pipes
- HVAC penetrations

For use with

- Concrete, masonry, drywall and wood floor assemblies
- Wall and floor assemblies rated up to 4 hours

Examples

- Sealing around combustible pipe penetrations in fire rated construction
- Sealing around non-combustible penetrations in fire rated construction

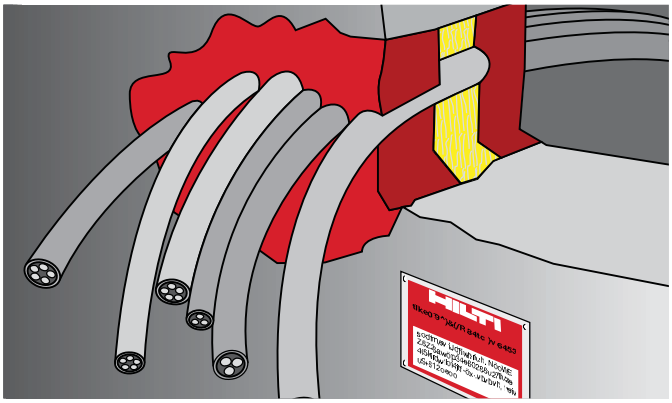

Technical Data*	FS-ONE
Chemical basis	Water-based intumescent acrylic dispersion
Color	Red
Application temperature	40°F to 104°F (5°C to 40°C)
Skin forming time	Approx. 20-30 min.
Curing time	Approx. 2 mm / 3 days
Movement capability	Approx. 5%
Expansion rate (unrestricted)	Up to 3-5 times original volume
Temperature resistance (cured)	-40°F to 212°F (-40°C to 100°C)
Surface burning characteristics (ASTM E 84-96)	Flame Spread: 0 Smoke Development: 5
Sound transmission classification (ASTM E 90-99)	56 (Relates to specific construction)
Approvals • California State Fire Marshal - No. 4485-1200:108 • City of New York - MEA 326-96-M Vol. IV	
Tested in accordance with • UL 1479 • ASTM E 814 • ASTM E 84	

*At 73°F (23°C) and 50% relative humidity

CLASSIFIED C UL US
FILL, VOID OR CAVITY MATERIAL
FOR USE IN THROUGH-PENETRATION
FIRESTOP SYSTEMS
SEE UL FIRE RESISTANCE DIRECTORY
66Y7

FM APPROVED

FCG -BM- CZ SYSTEM COMPATIBLE

Installation instructions for FS-ONE

Notice

- Before handlirg, read Material Safety Data Sheet and product label for safe usage and health information.
- Instructions below are general guidelines — always refer to the applicable drawing in the UL Fire Resistance Directory or Hilti Firestop Systems Guide for complete installation information

Opening

1. Clean the opening. Surfaces to which FS-ONE will be applied should be cleaned of loose debris, dirt, oil, moisture, frost and wax. Structures supporting penetrating items must be installed in compliance with local buildirg and electrical standards.

Application of firestop sealant

2. Install the prescribed backfilling material type and depth to obtain the desired rating (if required). Leave sufficient depth for applying FS-ONE.
3. Application of firestop sealant: Apply FS-ONE to the required depth in order to obtain the desired fire rating. Make sure FS-ONE contacts all surfaces to provide maximum adhesion. For application of FS-ONE use a standard caulking gun, foil pack gun, bulk loader and bulk gun. With FS-ONE buckets, Graco type sealant pumps may be used. (Contact pump manufacturer for proper selection).
4. Smoothing of firestop sealant: To complete the seal, tool immediately to give a smooth appearance. Excess sealant, prior to curing, can be cleaned away from adjacent surfaces and tools with water.
5. Leave completed seal undisturbed for 48 hours.
6. For maintenance reasons, a penetration seal could be permanently marked with an identification plate. In such a case, mark the identification plate and fasten it in a visible position next to the seal.

Not for use

- High movement expansion joints
- Underwater
- On materials where oil, plasticizers or solvents may bleed i.e. impregnated wood, oil based seals, green or partially vulcanized rubber
- In any penetration other than those specifically described in this manual or the test reports

Storage

- Store only in the original packagirg in a location protected from moisture at temperatures between 40°F (5°C) and 86°F (30°C)
- Observe expiration date on the packag

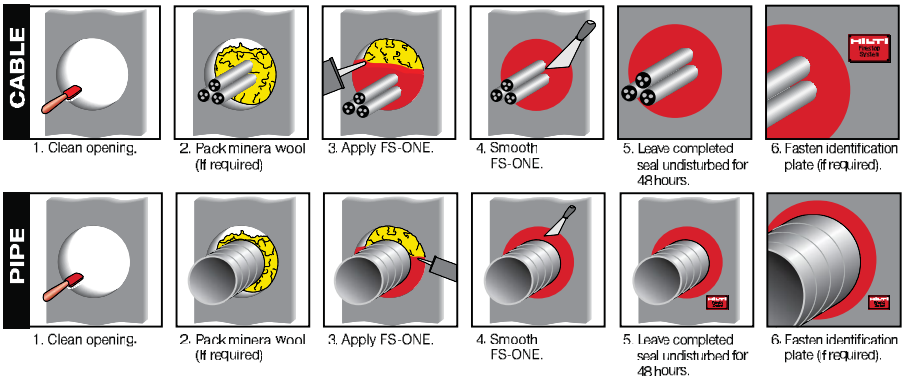

CFS-SP WB
Firestop Joint Spray

Product description

- A sprayable fire-rated mastic for construction joints where maximum movement is required

Product features

- Sprayable or apply by brush
- Maximum flexibility, meets 500 cycle requirements (Class II and III Approval) (ASTM E 1966 and UL 2079)
- Quick and easy installation with the Titan 600 or 1100 Sprayers can help save you time and money
- Contains no halogens, solvents or asbestos
- Water based formulation so spills and over-spray clean up quickly and easily
- Paintable
- Meets LEED™ requirements for indoor environmental quality credit 4.1 Low Emitting Materials, Sealants and Adhesives and 4.2 Paints and Coatings

Areas of application

- Top-of-wall joints
- Curtain wall/edge of slab
- Expansion joints

For use with

- Concrete, masonry and gypsum wall assemblies
- Wall and floor/wall assemblies rated up to 4 hours

Examples

- Where a gypsum wall assembly meets the underside of a metal or concrete deck
- Where a concrete floor assembly meets with non-rated exterior wall (concrete, glass, etc.)
- Where two concrete floor/wall assemblies meet

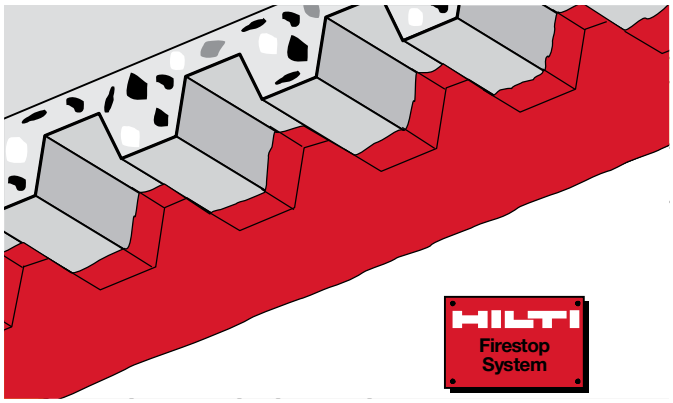

Technical Data*	CFS-SP WB
Density	Approx. 10.8 lb/gal (1.3 g/cm³)
Color	Available in red, white and gray**
Application temperature	39°F to 104°F (4°C to 40°C)
Temperature resistance	-40°F to 176°F (-40°C to 80°C)
Consistency	Sprayable liquid
Chemical basis	Acrylic-water-based-dispersion
Curing time	24 to 48 hours @ 73°F, 50% humidity for 1/8" depth
Ph-value	Approx. 8-9
Movement capability	Up to 50%
Surface burning characteristics (ASTM E 84-06)	Flame spread: 5 Smoke development: 10
Sound transmission classification (ASTM E 90-99)	In progress
Approvals • California State Fire Marshal - In progress • City of New York - MFA 99-99-M MEA 132-01-M	
Tested in accordance with • UL 2079 • ASTM E 1966 • ASTM E 84 • UL 1479 • ASTM E 814 • ASTM E 2307	

*At 73°F (23°C) and 50% relative humidity
**Gray color requires six (6) weeks lead time

CLASSIFIED C UL US
FILL, VOID OR CAVITY MATERIAL
FOR USE IN THROUGH-PENETRATION
FIRESTOP SYSTEMS, AND/OR JOINT
SYSTEMS, AND/OR PERIMETER
FIRE CONTAINMENT SYSTEMS
SEE UL FIRE RESISTANCE DIRECTORY
66Y7

FM APPROVED

Installation instructions for CFS-SP WB Firestop Joint Spray

Notice

- Before handling, read Material Safety Data Sheet and product label for safe usage and health information.
- Instructions below are general guidelines — always refer to the applicable drawing in the UL Fire Resistance Directory or Hilti Firestop Systems Guide for complete installation information

Opening

1. Clean the opening. Surfaces to which Firestop Joint Spray will be applied should be cleaned of loose debris, dirt, oil, wax and grease. The surface should be moisture and frost free.

Application of Firestop Joint Spray

2. Mineral wool packing: Install the prescribed back filling material type and depth to obtain desired rating.
3. Application of Firestop Joint Spray: Apply Firestop Joint Spray to the required depth in order to obtain the desired rating. Make sure Firestop Joint Spray contacts all surfaces and overlaps beyond all surrounding surfaces (Refer to UL System). Titan Sprayers have been successful in applying Firestop Joint Spray. Hilti recommends the use of the Titan 600 (for application temperatures above 50°F) or Firestop Joint Spray may also be brushed on with a paint brush. Contact Hilti Technical Support for more information.
4. Curing time: Allow 24 to 48 hours for typical application thickness (@ 73°F / 23°C) 50% humidity for 1/8" depth for the Firestop Joint Spray to fully cure.
5. Identification: For maintenance reasons all Firestop Joint Spray applications can be permanently marked with an identification plate and fastened in a visible position next to the seal.

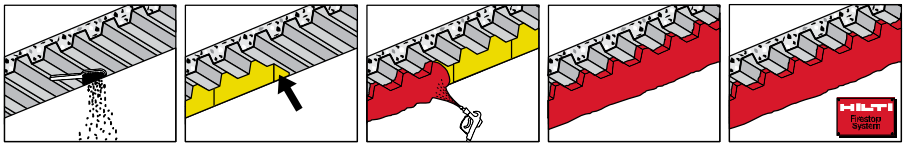

1. Clean opening
2. Pack in mineral wool compressed per UL System
3. Spray or brush on Firestop Spray
4. Allow Firestop Spray to cure
5. Fasten identification plate (if required)

Not for use

- In areas immersed in water
- On hot surfaces (above 176°F)

Storage

- Store only in the original packaging at temperatures 39°F to 77°F (4°C to 25°C)
- Observe expiration date on package

How to use this selection chart

1. Identify the penetrating item (metal pipe, cable trays, insulated metal pipe, etc.)
2. Identify the base material being penetrated (concrete, gypsum or wood)
3. Match the two items within the selection chart to identify the approved Hilti UL/OPL System

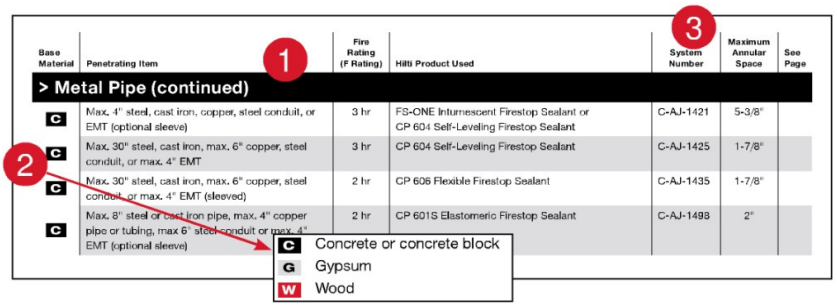

Through-Penetration

Base material	Penetrating item	Fire rating (F rating)	Hilti product used	System number	Maximum annular space	See page
>Blank Opening						
C		3hr	CFS-BL Firestop Block	C-AJ-0055	4"	26
C		2hr	FS-ONE MAX Intumescent Firestop Sealant	C-AJ-0070	7"	27
C		2 hr	FS-ONE MAX Intumescent Firestop Sealant	C-AJ-0090	6"	28
C		2 hr	CFS-BL Firestop Block, or FS-ONE MAX Intumescent Firestop Sealant	C-AJ-0138	24"	29
C		2 hr	CP 620 Fire Foam	W-J-0006	30"	30
C		2 hr	FS-ONE MAX Intumescent Firestop Sealant	W-J-0015	20"	31
C		2 hr	FS-ONE MAX Intumescent Firestop Sealant	W-J-0022	2"	32
G		2 hr	FCP 620 Fire Foam	W-L-0012	30"	33
G		2 hr	FS-ONE MAX Intumescent Firestop Sealant	W-L-0040	2"	34
G		2 hr	FS-ONE MAX Intumescent Firestop Sealant	W-L-0042	22-3/4"	35
> Metal Pipe						
C	Max 10" steel, cast iron, maax. 4" copper, steel conduit, or EMT	2 hr	FS-ONE MAX Intumescent Firestop Sealant CP 606 Flexible Firestop Sealant, or CP 601S Elastomeric Firestop Sealant	C-AJ-1149	1-1/4"	36
C	Max. 8" steel, cast iron, max 4" copper, conduit, or EMT (optional sleeve)	3 hr	CP 606 Flexible Firestop Sealant	C-AJ-1372	1-7/8"	37
C	Max. 30" steel, cast iron, max 6" copper, steel conduit, or max. 4" EMT (sleeved)	2 hr	CP 606 Flexible Firestop Sealant	C-AJ-1453	1-7/8"	38
C	Max. 8" steel or cast iron pipe, max. 4" copper pipe or tubing, max 6" steel conduit or max. 4" EMT (optional sleeve)	2 hr	CP 601S Elastomeric Firestop Sealant	C-AJ-1498	2"	39
C	Max. 4" steel conduits or EMT's (one or more) in 30" X 6" opening	2 hr	FS-ONE MAX Intumescent Firestop Sealant	C-AJ-1513	1/2"	40
C	Max.24" steel, cast iron, max. 6" copper, steel conduit, or max. 4" EMT	2 hr	CP 606 Flexible Firestop Sealant	C-AJ-1517	2"	41

C	Max. 30" steel, cast iron, max. 6" steel conduit, max.4" EMT or copper (sleeve optional) (min. 2-1/2" concrete) (bottom of top access) (with and without backer)	2 or 3 hr	FS-ONE MAX Intumescent Firestop Sealant	C-AJ-1575	3-1/4"	42
C	Max. 6" steel, cast iron, copper, steel conduit, or 4" EMT pipe (sleeved)	1 or 2 hr	FS-ONE MAX Intumescent Firestop Sealant	W-J-1068	1-1/4"	44
C	Max. 30" steel, cast iron, max. 6" copper, steel conduit, or max. 4" EMT	2 hr	CP 606 Flexible Firestop Sealant	W-J-1128	1-7/8"	45
G	Max. 30" steel, cast iron, max. 6" copper, steel conduit, or max. 4" EMT	1 or 2 hr	CP 606 Flexible Firestop Sealant	W-L-1297	*	46
G	Max. 3" steel pipe, steel conduit or EMT (membrane penetration)	1 or 2 hr	FS-ONE MAX Intumescent Firestop Sealant CP 606 Flexible Firestop Sealant, or CP 601S Elastomeric Firestop Sealant	W-L-1410	1"	47

* Refer to UL Systems

> Plastic pipe

C	Max. 10" PVC, CPVC, max. 6" FRPP or ABS (closed or vented) (optional sleeve)	2 or 3 hr	CP643N/644 Firestop Collar	C-AJ-2109	*	48
C	Max. 6" PVC, CPVC, FRPP or ABS (closed or vented) (optional sleeve)	3 hr	CP 643N Firestop Collar	C-AJ-2110	1-1/4"	50
C	Max. 6" PVDF or max. 4" PP	2 hr	CP 643N Firestop Collar	C-AJ-2217	3/8"	52
C	Max. 4" ABS (closed or vented)	3 hr	CP 648-E Firestop Wrap Strip	C-AJ-2337	5/16"	53
C	Max. 4" PVC, ABS, or CPVC (closed or vented)	3 hr	CP 648-E/S Firestop Wrap Strip	C-AJ-2342	*	54
C	Max. 4" PVC or CPVC (closed or vented)	2 hr	CP620 Fire Foam with CP 648-E Firestop Wrap Strip	C-AJ-2392	5-5/16"	56
C	Multiple max. 2" PVC, CPVC, Rigin Nonmetallic Conduit, ENT, max. 1" optical-fiber raceway, PEX	2 hr	FS-ONE MAX Intumescent Firestop Sealant	C-AJ-2407	*	57
C	Max. 4" PVC, ABS, or CPVC (closed or vented)	3 hr	CP 648-E Firestop Wrap Strip	C-AJ-2419	3/4"	58
C	Max. 6" PVC or CPVC (closed or vented)	4 hr	CP 643N Firestop Collar	W-J-2091	*	59
C	Max. 6" PVC or CPVC, Max. 4" ABS (closed or vented)	1 or 2 hr	CP 648-S Firestop Wrap Strip	W-J-2205	*	60
G	Max. 10" PVC, CPVC, FRPP, ABS or max.4" PVDF (closed or vented)	1 or 2 hr	CP 648-S Firestop Wrap Strip	W-L-2078	1/2"	62
G	Max. 6" PVC or CPVC (closed or vented)	4 hr	CP 643N Firestop Collar	W-L-2245	1/2"	64
G	Max. 6" PVC or CPVC, Max. 4" ABS	1 or 2 hr	CP 648-E Firestop Wrap Strip	W-L-2406	*	65
G	Max. 4" PVC, CPVC, FRPP or ABS (closed or vented) (optional pipe coupling)	1 or 2 hr	CP 648-E Firestop Wrap Strip	W-L-2411	1/2"	67

> Cables

C	Cable bundle (various cables) (optional sleeve)	3 hr	FS-ONE MAX Intumescent Firestop Sealant	C-AJ-3095	*	69
C	Cable bundle (various cables) (optional sleeve)	3 hr	FS-ONE MAX Intumescent Firestop Sealant	C-AJ-3180	*	71
C	Cable bundle (various cables) (optional sleeve)	3 hr	CP 606 Flexible Firestop Sealant	C-AJ-3181	1-7/8"	73
C	Cable bundle (various cables) (optional sleeve)	3 hr	FS-ONE MAX Intumescent Firestop Sealant	C-AJ-3239	2-1/2"	74
C	Cable bundle (various cables) (optional sleeve)	2 hr	CP 653 Speed Sleeve	C-AJ-3282	6"	76

C	Cable bundle (various cables) (optional sleeve)	2 hr	FS-ONE MAX Intumescent Firestop Sealant CP 606 Flexible Firestop Sealant, or CP 601S Elastomeric Firestop Sealant	W-J-3060	1"	77
G	Cable bundle (various cables) (optional sleeve)	2 hr	FS-ONE MAX Intumescent Firestop Sealant CP 606 Flexible Firestop Sealant, or CP 601S Elastomeric Firestop Sealant	W-L-3065	1"	79
G	SER cables	1 or 2 hr	FS-ONE MAX Intumescent Firestop Sealant	W-L-3071	1-1/2"	81
G	Cable bundle (various cables) (sleeved)	4 hr	FS-ONE MAX Intumescent Firestop Sealant	W-L-3139	1"	82
G	Cable bundle (various cables) (sleeved)	1 or 2 hr	FS-ONE MAX Intumescent Firestop Sealant CP 606 Flexible Firestop Sealant, or CP 601S Elastomeric Firestop Sealant	W-L-3320	1"	83
> Cable Trays						
C	Cable trays (various cables)	3 hr	CP 636 Firestop Mortar	C-AJ-4017	*	85
C	Cable trays (various cables)	3 hr	CFS-BL Firestop Block	C-AJ-4035	4"	86

* Refer to UL Systems

> Cable Trays (continued)						
C	Cable tray (various cables)	2 hr	FS-ONE MAX Intumescent Firestop Sealant	C-AJ-4071	6"	87
C	Cable tray (various cables)	2 hr	CFS-BL Firestop Block	W-J-4029	26"	88
G	Cable tray (various cables)	1 or 2 hr	CFS-BL Firestop Block	W-L-4011	4"	90
G	Cable tray (various cables)	1 or 2 hr	CFS-BL Firestop Block	W-L-4038	26"	92
G	Cable tray (various cables)	1 or 2 hr	FS-ONE MAX Intumescent Firestop Sealant	W-L-4060	3"	94
> Insulated Metal Pipe						
C	Max. 2" steel with max. 1" glass fiber insulation	2 hr	FS-ONE MAX Intumescent Firestop Sealant CP 606 Flexible Firestop Sealant, or CP 601S Elastomeric Firestop Sealant	C-AJ-5048	3-1/16"	96
C	Max 20" steel, max. 6" copper with max. 3" glass fiber insulation	3 hr	FS-ONE MAX Intumescent Firestop Sealant	C-AJ-5061	*	98
C	Max. 12" steel, max. 6" copper with nom. 2" glass fiber or max. 2" calcium silicate	2 hr	FS-ONE MAX Intumescent Firestop Sealant	C-AJ-5091	2-1/4"	100
C	Max. 4" steel or copper with max. 3/4" AB/PVC insulation	2 hr	FS-ONE MAX Intumescent Firestop Sealant	C-AJ-5198	1-3/8"	102
C	Max. 12" steel, max. 6" copper with nominal 1-1/2" or 3" FOAMGLAS insulation	2 hr	FS-ONE MAX Intumescent Firestop Sealant	C-AJ-5277	1-7/8"	103
C	Max. 6" steel, cast iron, ductile iron pipe or copper pipe or tubing with 2" glass-fiber pipe insulation	2 hr	FS-ONE MAX Intumescent Firestop Sealant	C-AJ-5301	1-7/8"	104
C	Max. 4" steel, EMT, or steel conduit, max. 2" copper with max. 3/4" AB/PVC insulation	1 or 2 hr	FS-ONE MAX Intumescent Firestop Sealant	W-J-5041	1-1/2"	106
C	Max. 12" steel, max. 6" copper, max. 4" steel conduit, EMT with maximum 2" glass-fiber insulation	1 or 2 hr	FS-ONE MAX Intumescent Firestop Sealant	W-J-5042	1-1/2"	107
C	Max. 12" steel or 6" copper with max. 2" glass fiber (optional sleeve)	1 or 2 hr	FS-ONE MAX Intumescent Firestop Sealant	W-J-5140	1-7/8"	109

G	Max. 4" steel, steel conduit, EMT, or max. 2" copper with 3/4" AB/PVC insulation	1 or 2 hr	FS-ONE MAX Intumescent Firestop Sealant	W-L-5028	1-1/2"	111
G	Max. 12" steel, max. 6" copper, max. 4" steel conduit or EMT with 1", 1-1/2" or 2" glass-fiber insulation or max. 2" calcium silicate insulation	1 or 2 hr	FS-ONE MAX Intumescent Firestop Sealant	W-L-5029	1-7/8"	113
G	Max 20" steel, max. 6" copper, conduit or max. 4" EMT pipe with max. 3" glass fiber insulation (steel sleeve optional)	1 or 2 hr	FS-ONE MAX Intumescent Firestop Sealant	W-L-5047	3"	115
G	Max. 10" steel, max. 4" copper pipe with max. 2" glass fiber insulation	1 or 2 hr	FS-ONE MAX Intumescent Firestop Sealant	W-L-5096	*	117
G	Max. 12" steel, max. 6" copper with nominal 1-1/2" or 3" FOAMGLAS insulation	1 or 2 hr	FS-ONE MAX Intumescent Firestop Sealant	W-L-5223	1-1/4"	119
G	Max. 2" steel, cast iron, ductile iron pipe or copper pipe or tubing with 2" glass-fiber pipe insulation	2 hr	CP 648-E Firestop Wrap Strip	W-L-5244	13/16"	121

* Refer to UL Systems

> Electrical Busways

C	Electrical Busway	3 hr	CP 636 Firestop Mortar	C-AJ-6006	*	123
C	Electrical Busway	3 hr	FS-ONE MAX Intumescent Firestop Sealant	C-AJ-6017	2"	124
C	Electrical Busway	2 hr	CP620 Fire Foam	C-AJ-6036	5-3/4"	125
G	Electrical Busway	1 or 2 hr	FS-ONE MAX Intumescent Firestop Sealant	W-L-6019	1-1/4"	126

> Metal Ducts / Mechanical Support

C	Max. 32" x 32" sheet metal duct (without damper)	3 hr	CP 601S Elastomeric Firestop Sealant	C-AJ-7046	1-1/2"	128
C	Max. 30" x 30" sheet metal duct (without damper)	3 hr	CP 606 Flexible Firestop Sealant or FS-ONE MAX Intumescent Firestop Sealant	C-AJ-7051	1-3/4"	129
C	Max. 20" spiral wound duct (min. 24 ga.) without damperor max. 12" spiral wound duct (min. 28 ga.) without damper	2 hr	CP 601S ElastmericFirestop Sealant, CP 606 Flexible Firestop Sealant, or FS-ONE MAX Intumescent Firestop Sealant	C-AJ-7084	1-1/2"	130
C	Max. 24" x 12" sheet metal duct (without damper)	2 hr	FS-ONE MAX Intumescent Firestop Sealant	C-AJ-7104	2"	131
C	Max. 30" x 30" sheet metal duct (without damper)	2 hr	FS-ONE MAX Intumescent Firestop Sealant	C-AJ-7111	1-3/4"	133
G	Max. 20" spiral wound duct without damper, or 12" sheet metal duct	1 or 2 hr	CP 601S Elastomeric Firestop Sealant, CP 606 Flexible Firestop Sealant, or FS-ONE MAX Intumescent Firestop Sealant	W-L-7042	1-1/2"	134
G	Max. 100" x 100" sheet metal duct (without damper)	1 or 2 hr	FS ONE Intumescent Firestop Sealant or CP 606 Flexible Firestop Sealant	W-J-7109	2"	135
G	Max. 100" x 100" sheet metal duct meeting SMACNA construction standards	1 hr	CP 606 Flexible Firestop Sealant	W-L-7155	2"	137

> Insulated Metal Ducts

C	Max. 24" x 12" sheet metal duct with 1-1/2" glass fiber insulation	1 or 2 hr	FS-ONE MAX Intumescent Firestop Sealant	W-J-7029	1"	139
C	Max. 100" x 100" sheet metal with 1-1/2" or 2" thick glass fiber duct insulation	2 hr	FS-ONE MAX Intumescent Firestop Sealant	W-J-7112	2"	140

G	Max. 24" x 12" sheet metal duct without damper with max. 1-1/2" thickness foil scrim glass fiber duct insulation	1 or 2 hr	FS-ONE MAX Intumescent Firestop Sealant	W-L-7059	1"	142
G	Max. 20" spiral would duct or 12" sheet metal duct (without damper) with 1-1/2" thick glass fiber duct insulation	1 or 2 hr	FS-ONE MAX Intumescent Firestop Sealant	W-L-7153	1"	144
G	Max. 100" x 100" sheet metal duct (withoutdamper) with 1-1/2" or 2" thick glass fiber duct insulation	1 or 2 hr	FS-ONE MAX Intumescent Firestop Sealant	W-L-7156	2"	146
>Trunking						
C	Max. 12" x 12" metal trunking	2 hr	CFS-BL Firestop Block	HK06020	*	148
G	Max. 12" x 12" metal trunking	2 hr	CFS-BL Firestop Block	HK06063	*	149

* Refer to UL Systems

> Large Opening/Multiple Penetration						
C	Max. 12" steel, max. 4" copper, steel conduit or EMT	3 hr	CP 636 Firestop Mortar	C-AJ-1140	*	150
C	Insulted or non-insulated steel, cast iron, copper, conduit, or EMT pipes, cables, PVC plastic pipe	2 hr	CP 620 Fire Foam	C-AJ-8096	*	151
C	Multiple insulated and non-insulated steel, cast iron, copper, steel conduit, or EMT and cable bundle	3 hr	FS-ONE MAX Intumescent Firestop Sealant	C-AJ-8099	*	156
C	Multiple insulated and non-insulated copper pipe and cable bundle	3 hr	CFS-BL Firestop Block	C-AJ-8100	*	158
C	Non-Insulated steel, cast iron, copper, steel conduit or EMT, fiber optic raceways, or cable conduittrays	3 hr	CFS-BL Firestop Block	C-AJ-8110	*	160
C	Multiple insulated or non-insulated metallic pipes, conduits and cables (single or bundled)	2 hr	FS-ONE MAX Intumescent Firestop Sealant	C-AJ-8143	12"	162
C	Max. 2" steel conduit or EMT (one or more)	1 or 2 hr	CP 620 Fire Foam	W-J-1116	*	164
C	Insulated or non-insulated steel, cast iron, copper, steel conduit or EMT pipes, cable tray or cables (single or bundled)	4 hr	CFS-BL Firestop Block	W-J-8007	*	165
C	Max. 2" metallic pipe, ENT and cable bundle	2 hr	FS-ONE MAX Intumescent Firestop Sealant	W-J-8039	*	168
C	Insulated or non-insulated metallic, non-metallic pipes, and cable bundle	2 hr	FS-ONE MAX Intumescent Firestop Sealant	W-J-8043	*	170
G	Multiple max. 2" steel conduits or EMT	1 or 2 hr	CP 620 Fire Foam	W-L-1249	*	172
G	Multiple max. 4" steel pipe, steel conduit or EMT	1 or 2 hr	FS-ONE MAX Intumescent Firestop Sealant	W-L-1408	*	173
G	Insulated or non-insulated steel, cast iron, copper, conduit, or EMT pipes, cables, PVC plastic pipe, flexible conduit, and sheet metal duct	1 or 2 hr	CP 620 Fire Foam	W-L-8019	*	174

G	Max. 2" steel, cast iron, conduit, EMT, flexible gas piping, or ENT, max. 4" cable bundle	1 or 2 hr	FS-ONE MAX Intumescent Firestop Sealant	W-L-8071	*		179
G	Insulated or non-insulated metallic, non-metallic pipes, and cable bundle	1 or 2 hr	FS-ONE MAX Intumescent Firestop Sealant	W-L-8079	*		181
G	UL listed metallic or non-metallic outlet boxes	1 or 2 hr	CP 617 Firestop Putty Pads	CLIV	*		184

* Refer to UL Systems

Joint

Base material	Type of joint — description	Fire rating (F rating)	Max. joint width (inches)	Movement capability	Hilti product used	System number	Sealant depth (inches)	See page
> Floor to floor, wall to floor and wall to wall joints								
C	Concrete floor to floor joint	2 hr	3-1/2"	14%	CFS-SP WB/	FF-D-1013	1/8"	186
C	Concrete floor to floor joint	4 hr	2"	12.50%	CP 601s	FF-D-1047	1/2"	187
C	Concrete floor to floor joint	2 hr	3"	17%	CP 606	FF-D-1087	1/4"	188
C	Concrete floor to wall joint	2 hr	3-1/2"	14%	CFS-SP WB/	FW-D-1013	1/8"	189
C	Concrete floor to wall joint	4 hr	2"	12.50%	CP 601s	FW-D-1047	1/2"	190
C	Concrete floor to wall joint	2 hr	3"	17%	CP 606	FW-D-1071	1/4"	191
C	Concrete or block wall perpendicular and parallel to concrete over metal deck (includes roof deck) (top of wall)	2 hr	3/4"	33%	CP 606	HW-D-0081	1/2"	192
C	Concrete or block wall to concrete over metal deck withoptional use of spray-on fireproofing (parallel) (top-ofwall)	2 hr	1"	12.50%	CFS-SP WB/	HW-D-0181	1/8"	194
C	Concrete or block wall perpendicular to concrete over metal deck (top-of-wall)	2 hr	2-1/4"	11%	CP 606	HW-D-0225	1/2"	196
C	Concrete or block wall parallel to concrete over metal Concrete or block wall to concrete floor or hollow core floor (Sealant only) (top of wall)	2 hr	1"	12.50%	CP 606	HW-D-0268	1/2"	198
C	Concrete or block wall perpendiular to concrete over	2 hr	2"	12.50%	CFS-SP WB/	HW-D-0285	1/8"	199

	metal deck (includes roof deck) (top of wall — one sideaccess)							
C	Concrete or block wall parallel to concrete over metal deck (includes roof deck) (top of wall - one side access)	2 hr	2"	12.50%	CFS-SP WB/	HW-D-0286	1/8"	201
C	Concrete or block wall perpendicular to concrete floor over metal deck (top-of-wall)	4 hr	1"	12.50%	CFS-SP WB/	HW-D-0294	1/8"	203
C	Concrete or block wall to bottom of fire-proofed steel I-beam to concrete over metal deck	2 hr	3-1/2"	14%	CFS-SP WB/	HW-D-1037	1/8"	204
C	Concrete or block wall to concrete floor (top of wall)	4 hr	2"	12.50%	CP 601s	HW-D-1042	1/2"	206
C	Concrete or block wall to concrete floor	3 hr	3-1/4"	25%	CFS-SP WB/	HW-D-1058	1/8"	207
C	Block wall perpendicular/parallel to fluted metal deck	1 or 2 hr	2-1/2"	40%	CFS-SP WB/	HW-D-1069	1/8"	208
C	Block wall to underside of flat concrete	2 hr	3"	17%	CP 606	HW-D-1078	1/4"	209

* Refer to UL Systems

C	Concrete or block wall to wall joint	2 hr	2"	12.50%	CFS-SP WB/	WW-D-0017	1/8"	210
C	Concrete or block wall to wall joint (sealant only)	2 hr	1"	12.50%	CP 606	WW-D-0032	1/2"	211
C	Concrete or block wall perpendicular to gypsum wall (wall to wall) (Sealant only)	1 or 2 hr	3/4"	17%	CP 606,	WW-D-0040	5/8"	212
C	Concrete or block wall to wall joint	4 hr	2"	12.50%	CP 601s	WW-D-1047	1/2"	214
C	Concrete wall to wall joint	2 hr	3"	17%	CP 606	WW-D-1080	1/4"	215
G	Gypsum wall perpendicular to concrete over metal deck with optional use of spray-on fireproofing (includes roof deck) (top-of-wall)	1 or 2 hr	1"	50%	CFS-SP WB/	HW-D-0042	1/8"	216
G	Gypsum wall perpendicular to concrete over metal deck (includes roof deck) (top-of-wall)	1 or 2 hr	1"	50%	CFS-SP WB/	HW-D-0049	1/8"	220
G	Gypsum wall parallel to concrete over metal deck with optional use of spray-on fireproofing (includes roof deck) (top-of-wall)	1 or 2 hr	3/4"	17%	CP 606	HW-D-0184	5/8"	223
G	Gypsum wall to concrete floor or hollow core concrete (top-of-wall)	1 or 2 hr	3/4"	17%	CP 606	HW-D-0209	5/8"	226
G	Gypsum wall parallel to concrete over metal deck (wall not centered under lower plane of flute) (top of wall)	1 or 2 hr	1"	18.75%	CFS-SP WB/	HW-D-0264	1/8"	228
G	Gypsum wall perpendicular to concrete over metal deck (top of wall)	1, 2, 3, or 4 hr	1"	12.50%	CFS-SP WB/	HW-D-0292	1/8"	231
G	Gypsum wall (cut to profile) perpendicular to concrete over metal deck with optional use of spray-on fireproofing (sealant only)(top-of-wall)	2 hr	3/4"	8%	CP 606	HW-D-0342	1"	233

G	Gypsum shaft wall to concrete over metal deck (top-ofwall) (perpendicular)	2 hr	3/4"	16%	CFS-SP WB/	HW-D-0541	1/8"	235
G	Gypsum wall perpendicular to fluted metal deck	1 or 2 hr	2-1/2"	40%	CFS-SP WB/	HW-D-1066	1/8"	238
G	Gypsum wall parallel to fluted metal deck	1 or 2 hr	2-1/2"	40%	CFS-SP WB/	HW-D-1067	1/8"	240
G	Gypsum wall to underside of flat concrete	1 or 2 hr	2-1/2"	40%	CFS-SP WB/	HW-D-1068	1/8"	242
G	Gypsum wall to wall joint	1 or 2 hr	2"	12.50%	CP 606	WW-D-0067	1/2"	244

* Refer to UL Systems

Base material	Type of joint - description	Fire rating (F rating)	Max. joint Width (inches)	Movement Capability	Hilti product used	System number	Sealant Depth (inches)	See page
> Curtain Wall Joints								
	Glass spandrel with aluminum framing	2 hr	6"	-	CFS-SP WB/	HI/JS 20-05 (CEJ-127-P)	1/8"	245
	Concrete panels with steel framing	2 hr	8"	12.5%	CFS-SP WB/	HI/BP 180-01 (CEJ-307-P)	1/8"	248
	Concrete floor to glass or aluminum spandrel with aluminum framing	2 hr	8"	9.50%	CFS-SP WB/	HI/BP 120-02 (CEJ-400-P)	1/8"	252
	Concrete floor to glass, aluminum, or granite spandrel with aluminum framing	2 hr	5%	9.50%	CFS-SP WB/	CW-D-2027	1/8"	254
	Glass, aluminum or granite spandrel with aluminum framing	2 hr	5%	5%	CFS-SP WB/	CW-D-2046	1/8"	257
	Gypsum with various facades. Steel framing starts and stops above and below floor	2 hr	2"	-	CFS-SP WB/	HI/BP 120-05	1/8"	260
	Glass Spandrel with Aluminum framing (vision glass at floor)	2 1/2 hr	12.5% & 6.25%	8"	CFS-SP WB/	HI/BP 150-01	1/8"	264

* Refer to UL Systems

Classified by
Underwriters Laboratories, Inc.
to UL 1479 and CAN/ULC-S115

System No. C-AJ-0055

ANSI/UL1479 (ASTM E814)	CAN/ULC S115
F Rating — 3 Hr	F Rating — 3 Hr
T Rating — 0 Hr	FT Rating — 0 Hr
	FH Rating — 3 Hr
	FTH Rating — 0 Hr

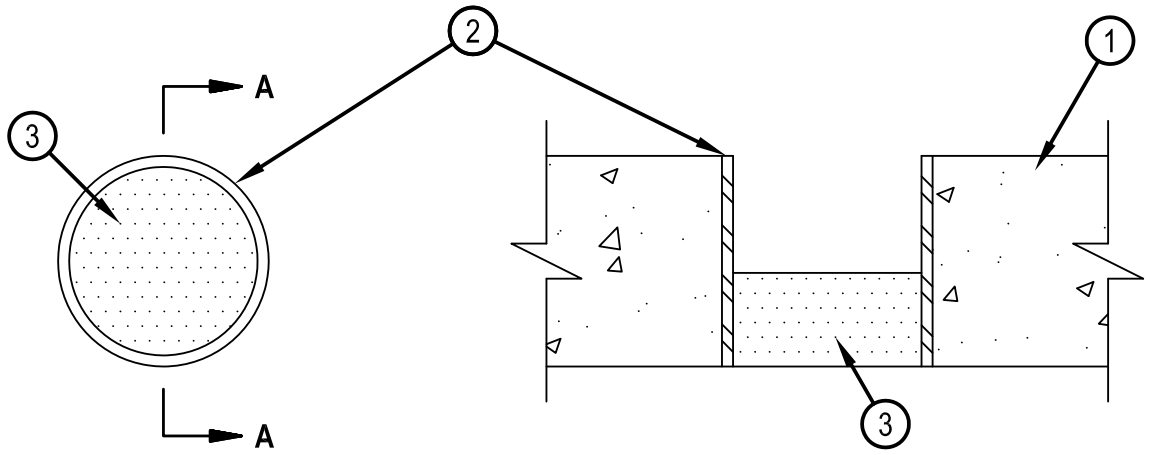

SECTION A-A

1. Floor or Wall Assembly — Min 4-1/2 in. (114 mm) thick reinforced lightweight or normal weight (100-150 pcf) concrete. Wall may also be constructed of any UL Classified Concrete Blocks*. Max diam of opening is 4 in. (102 mm).
   See Concrete Blocks (CAZT) category in the Fire Resistance Directory for names of manufacturers.
2. Metallic Sleeve — Nom 4 in. (102 mm) diam (or smaller) Schedule 40 (or heavier) steel pipe cast or grouted into floor or wall assembly, flush with floor or wall surfaces. Sleeve may extend max 3 in. (76 mm) above top surface of floor.
3. Fill, Void or Cavity Material* — Fire block min 2 in. (51 mm) thick cut to a diam 1/2 in. (13 mm) larger than the opening, flush with bottom surface of floor or with both surfaces of wall.

HILTI CONSTRUCTION CHEMICALS, DIV OF HILTI INC — FS 657 Fire Block or CFS-BL Firestop Block
*Bearing the UL Classification Mark

Hilti Firestop Systems

Reproduced by HILTI, Inc. Courtesy of
Underwriters Laboratories, Inc.
December 12, 2011

Classified by
Underwriters Laboratories, Inc.
to UL 1479 and CAN/ULC-S115

System No. C-AJ-0070

ANSI/UL1479 (ASTM E814)	CAN/ULC S115
F Rating — 2 Hr	F Rating — 2 Hr
T Rating — 2 Hr	FT Rating — 2 Hr
	FH Rating — 2 Hr
	FTH Rating — 2 Hr
	L Rating At Ambient — Less Than 1 CFM/sq ft

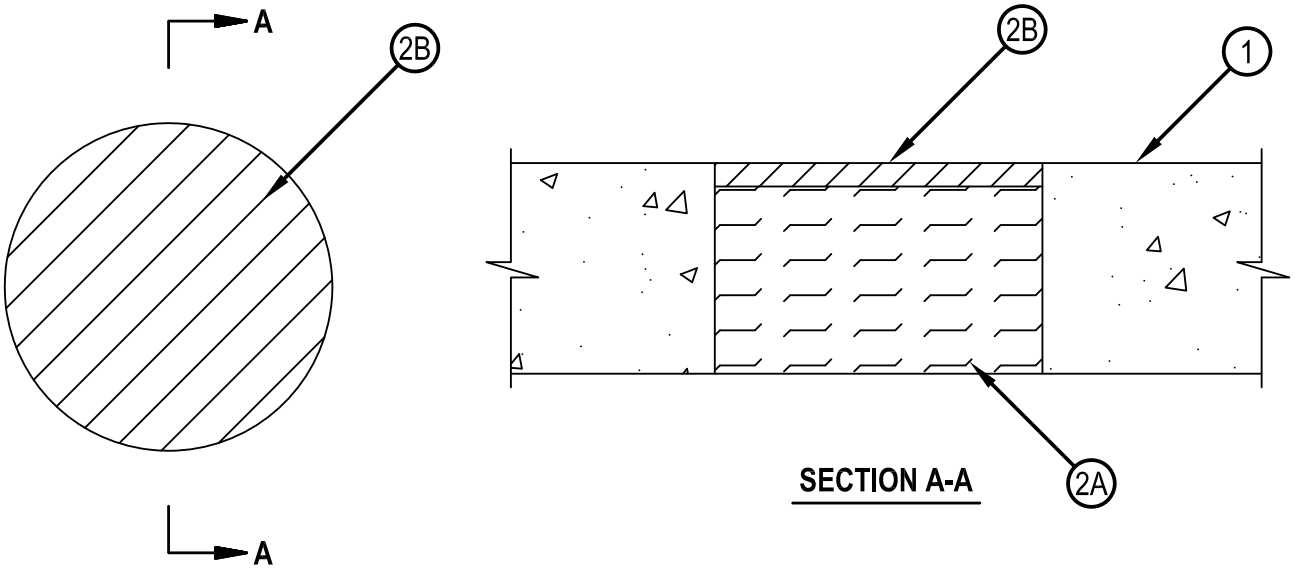

1. Floor or Wall Assembly — Min 4-1/2 in. (114 mm) thick reinforced lightweight or normal weight (100-150 pcf or 1600-2400 kg/m3) concrete. Wall may also be constructed of any UL Classified Concrete Blocks*. Max diam of opening is 7 in. (178 mm).
   See Concrete Blocks (CAZT) category in the Fire Resistance Directory for names of manufacturers.
2. Firestop System — The firestop system shall consist of the following:
   A. Packing Material — Min. 4 in. (102 mm) thickness of 4 pcf (64 kg/m3) mineral wool batt insulation tightly packed into the opening as a permanent form. Packing material to be recessed from top surface of floor and both surfaces of wall as required to accommodate the required thickness of fill material.
   B. Fill Void or Cavity Materials* — Sealant — Min 1/2 in. (13 mm) thickness of fill material applied within the annulus, flush with top surface of floor.
   HILTI CONSTRUCTION CHEMICALS, DIV OF HILTI INC — FS -ONE Sealant or FS-ONE MAX Intumescent Sealant

* Indicates such products shall bear the UL or cUL Certification Mark for jurisdictions employing the UL or cUL Certification (such as Canada), respectively.

Hilti Firestop Systems

Reproduced by HILTI, Inc. Courtesy of
Underwriters Laboratories, Inc.
January 06, 2015

System No. C-AJ-0090

Classified by Underwriters Laboratories, Inc. to UL 1479 and CAN/ULC-S115

ANSI/UL1479 (ASTM E814)	CAN/ULC S115
F Rating - 2 Hr	F Rating - 2 Hr
T Rating - 1-1/2 Hr	FT Rating - 1-1/2Hr
	FH Rating - 2 Hr
	FTH Rating - 1-1/2 Hr

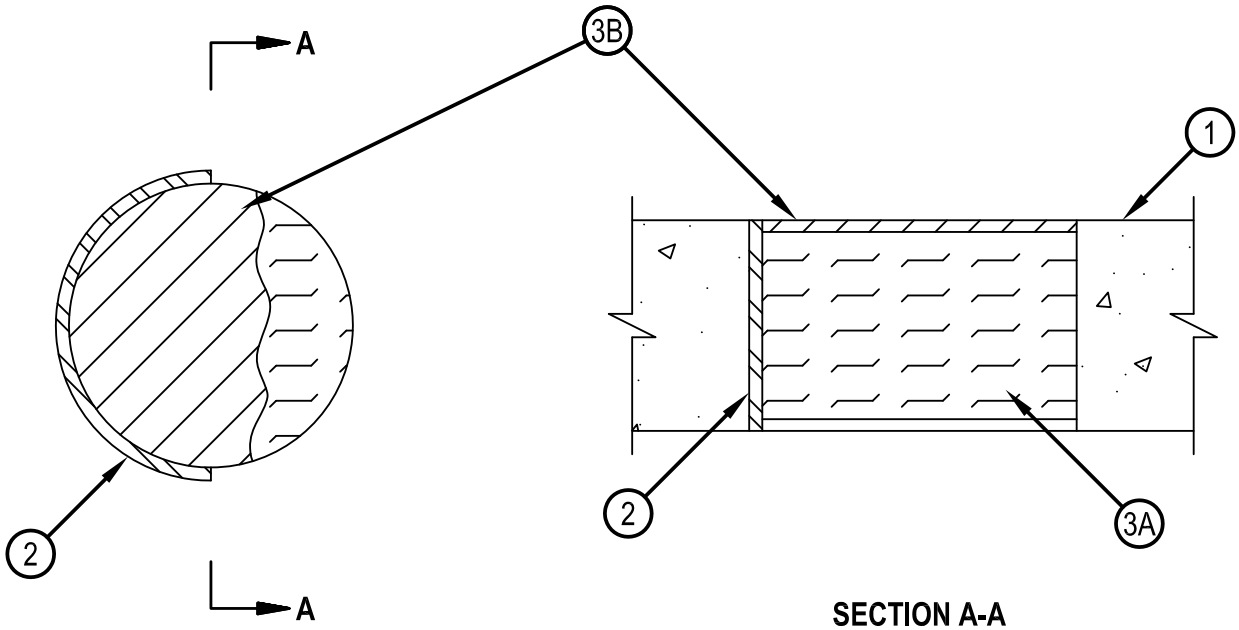

SECTION A-A

1. Floor or Wall Assembly — Min 4-1/2 in. (114 mm) thick reinforced lightweight or normal weight (100-150 pcf or 1600-2400 kg/m3) concrete. Wall may also be constructed of any UL Classified Concrete Blocks*. Max diameter of opening is 6 in. (152 mm).
   See Concrete Blocks (CAZT) category in the Fire Resistance Directory for names of manufacturers.
2. Steel Sleeve — (Optional)-Nom 6 in. (152 mm) diameter (or smaller) Schedule 40 (or heavier) steel pipe cast or grouted into the floor or wall assembly, flush with floor or wall surfaces.
3. Firestop System — The firestop system shall consist of the following:
   A. Packing Material — Min 4 in. (102 mm) thickness of 4 pcf (64 kg/m3) mineral wool batt insulation tightly packed into the opening as a permanent form. Packing material to be recessed from top surface of floor and both surfaces of wall to accommodate the required thickness of fill material.
   B. Fill, Void or Cavity Materials* — Sealant — Min 1/4 in. (6 mm) thickness of fill material applied within the annulus, flush with top surface of floor.
   HILTI CONSTRUCTION CHEMICALS, DIV OF HILTI INC — FS-ONE Sealant or FS-ONE MAX Intumescent Sealant

* Indicates such products shall bear the UL or cUL Certification Mark for jurisdictions employing the UL or cUL Certification (such as Canada), respectively.

Hilti Firestop Systems

Reproduced by HILTI, Inc. Courtesy of Underwriters Laboratories, Inc.
January 06, 2015

Classified by
Underwriters Laboratories, Inc.
to UL 1479 and CAN/ULC-S115

System No. C-AJ-0138

ANSI/UL1479 (ASTM E814)	CAN/ULC S115
F Rating —2 Hr	F Rating — 2 Hr
T Rating — 1-3/4 Hr	FT Rating — 1-3/4 Hr
	FH Rating — 2 Hr
	FTH Rating — 1-3/4 Hr

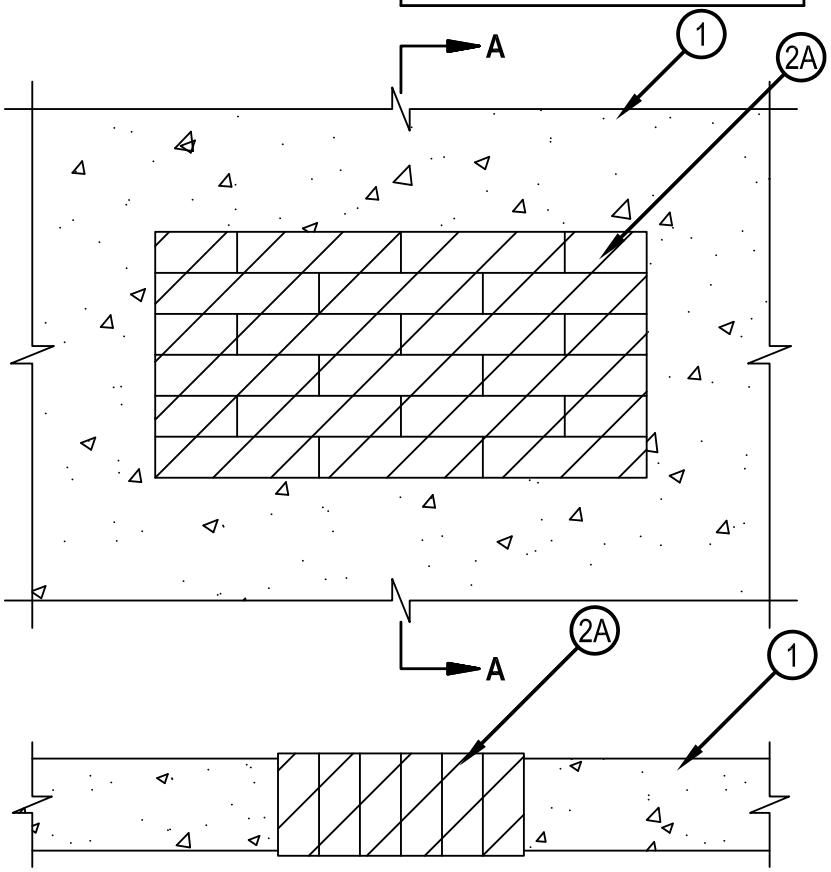

SECTION A-A

1. Floor or Wall Assembly — Min 4-1/2 in.(114 mm) thick reinforced lightweight or normal weight (100-150 pcf or 1600-2400 kg/m3) concrete floor or wall. Wall may also be constructed of any UL Classified Concrete Blocks*. Max area of opening is 288 in2 (1858 cm2) with maximum dimension of 24 in. (610 mm).
   See Concrete Blocks (CAZT) category in the Fire Resistance Directory for names of manufacturers.
2. Firestop System — The firestop system shall consist of the following:
   A. Fill Void or Cavity Materials*-Fire Blocks — Fire blocks installed with 5 in. (127 mm) dimension projecting through opening, centered within thickness of floor or wall assembly. Blocks to be firmly packed and completely fill the entire area of opening. In concrete block walls, install fire blocks to full wall thickness unless the wall is solid filled. Blocks can be cut to smaller thickness where needed to assist in firm packing and filling any gaps or voids within opening.
   HILTI CONSTRUCTION CHEMICALS, DIV OF HILTI INC — CFS-BL Firestop Block
   B. Fill Void or Cavity Materials* — (Optional) Fill material applied to maximum extent possible to fill any voids that may exist within the opening.
   HILTI CONSTRUCTION CHEMICALS, DIV OF HILTI INC — FS-ONE Sealant, FS-ONE MAX Intumescent Sealant or CP618 Putty Stick

* Indicates such products shall bear the UL or cUL Certification Mark for jurisdictions employing the UL or cUL Certification (such as Canada), respectively.

Hilti Firestop Systems

Reproduced by HILTI, Inc. Courtesy of
Underwriters Laboratories, Inc.
January 06, 2015

Classified by
Underwriters Laboratories, Inc.
to UL 1479 and CAN/ULC-S115

System No. W-J-0006

F Ratings - 1 and 2 Hr (See Items 1 and 2)
T Ratings - 1 and 2 Hr (See Item 2)

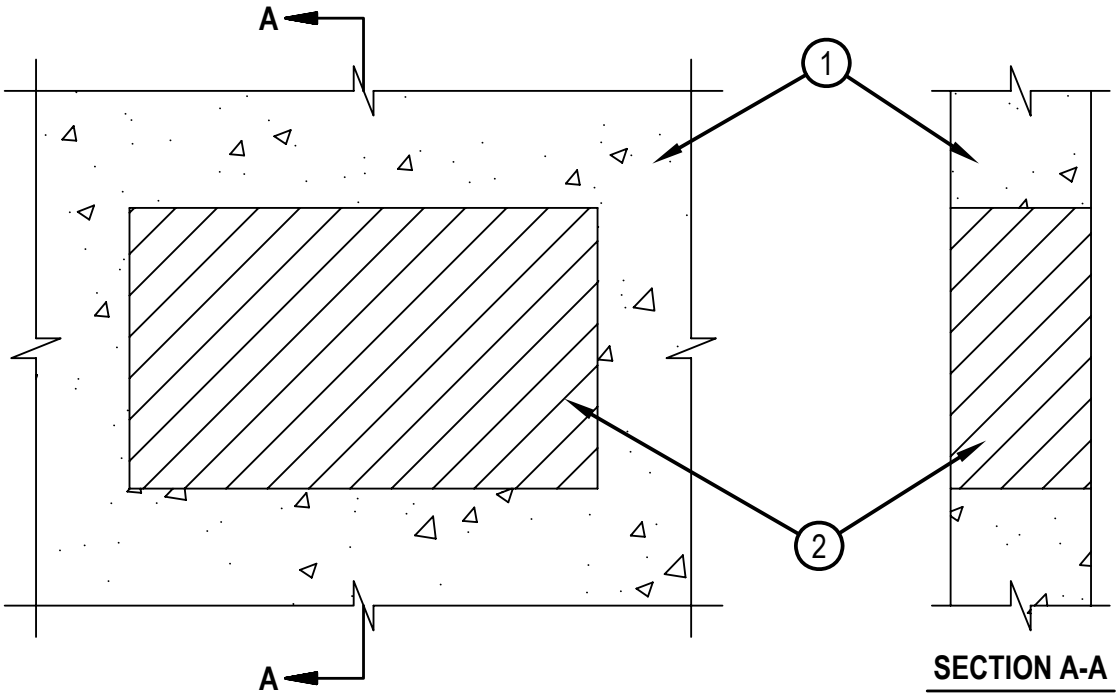

SECTION A-A

1. Wall Assembly — Min 4-3/4 in. and 6 in. thick reinforced lightweight or normal weight (100-150pcf) concrete for 1 and 2 hr fire rated walls, respectively. Wall may also be constructed of any solid or filled UL Classified Concrete Blocks* Max area of opening is 450 in.2 with max dimension of 30 in.

   See Concrete Blocks (CAZT) category in the Fire Resistance Directory for names of manufacturers.

2. Fill, Void or Cavity Material* — Foam Fill material applied within annulus flush with one surface of the wall. Min fill material thickness for 1 hr F and T Ratings is 4-3/4 in. Min fill material thickness for 2 hr F and T Ratings is 6 in.

   HILTI CONSTRUCTION CHEMICALS, DIV OF HILTI INC — CP 620 Fire Foam

*Bearing the UL Classification Mark

Hilti Firestop Systems

Reproduced by HILTI, Inc. Courtesy of
Underwriters Laboratories, Inc.
July 24, 2002

Classified by
Underwriters Laboratories, Inc.
to UL 1479 and CAN/ULC-S115

System No. W-J-0015

ANSI/UL1479 (ASTM E814)	CAN/ULC S115
F Rating — 2 Hr	F Rating — 2 Hr
T Rating — 2 Hr	FT Rating — 2 Hr
	FH Rating — 2 Hr
	FTH Rating — 2 Hr

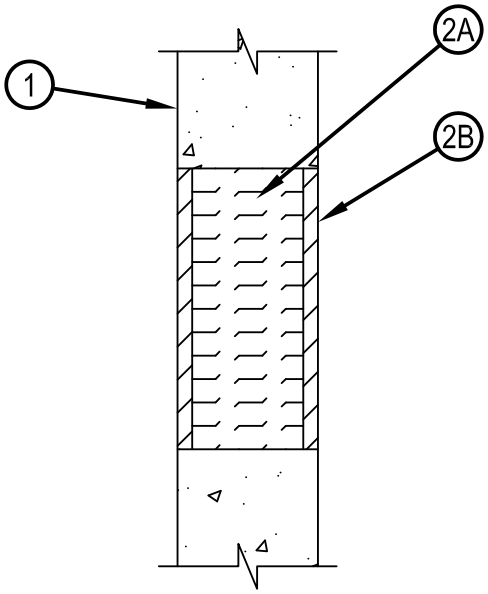

1. Wall Assembly — Min 6 in. (152 mm) thick reinforced lightweight or normal weight (100-150 pcf) concrete. Wall may also be constructed of any UL Classified Concrete Blocks*. Max area of square, rectangular, or circular opening is 240 sq in.(1548 cm2) with max dimension of 20 in. (508 mm)
   See Concrete Blocks (CAZT) category in the Fire Resistance Directory for names of manufacturers.
2. Firestop System — The firestop system shall consist of the following:
   A. Packing Material — Min 4-3/4 in. (121 mm) thickness of min 4 pcf (64 kg/m3) mineral wool batt insulation firmly packed into opening as a permanent form. Packing material recessed from both surfaces of the wall to accommodate the required thickness of fill material.
   B. Fill, Void or Cavity Material* — Sealant — Min 5/8 in. (16 mm) thickness of fill material applied within annulus, flush with both surfaces of wall. HILTI CONSTRUCTION CHEMICALS, DIV OF HILTI INC — FS-ONE Sealant or FS-ONE MAX Intumescent Sealant

* Indicates such products shall bear the UL or cUL Certification Mark for jurisdictions employing the UL or cUL Certification (such as Canada), respectively.

+ Bearing the UL Listing Mark

Bearing the UL Recognized Component Mark

Hilti Firestop Systems

Reproduced by HILTI, Inc. Courtesy of
Underwriters Laboratories, Inc.
January 20, 2015

Classified by
Underwriters Laboratories, Inc.
to UL 1479 and CAN/ULC-S115

System No. W-J-0022

ANSI/UL1479 (ASTM E814)	CAN/ULC S115
F Rating — 2 Hr	F Rating — 2 Hr
T Rating — 1-3/4 Hr	FT Rating — 1-3/4 Hr
	FH Rating — 2 Hr
	FTH Rating — 1-3/4 Hr

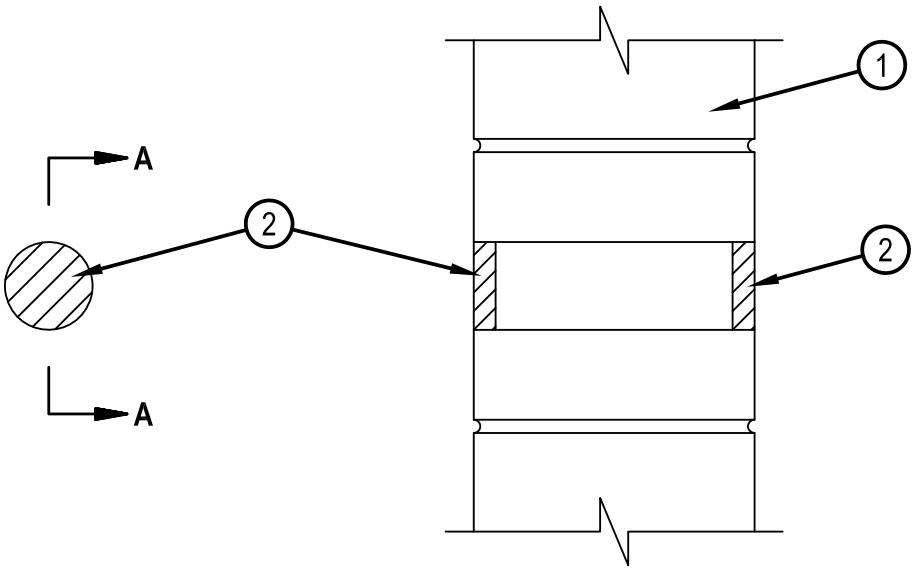

SECTION A-A

1. Wall Assembly — Min 6 in. (152 mm) thick reinforced lightweight or normal weight (100-150 pcf or 1600-2400 kg/m3) concrete. Wall may also be constructed of any UL Classified Concrete Blocks*. Max diam of opening is 2-1/2 in. (64 mm) or a max area of 4 in. (25.8 cm2) with a max dimension of 2 in. (51 mm).
   See Concrete Blocks (CAZT) category in the Fire Resistance Directory for names of manufacturers.
2. Fill, Void or Cavity Material* — Sealant — Min 5/8 in. (16 mm) thickness of sealant applied within annulus, flush with both surfaces of wall.
   HILTI CONSTRUCTION CHEMICALS, DIV OF HILTI INC — FS-ONE Sealant or FS-ONE MAX Intumescent Sealant

* Indicates such products shall bear the UL or cUL Certification Mark for jurisdictions employing the UL or cUL Certification (such as Canada), respectively.

Hilti Firestop Systems

Reproduced by HILTI, Inc. Courtesy of
Underwriters Laboratories, Inc.
January 20, 2015

Classified by
Underwriters Laboratories, Inc.
to UL 1479 and CAN/ULC-S115

System No. W-L-0012

F Rating - 1 Hr & 2 Hr (See Item 1 & 2)
T Rating - 1 Hr & 2 Hr (See Item 1 & 2)

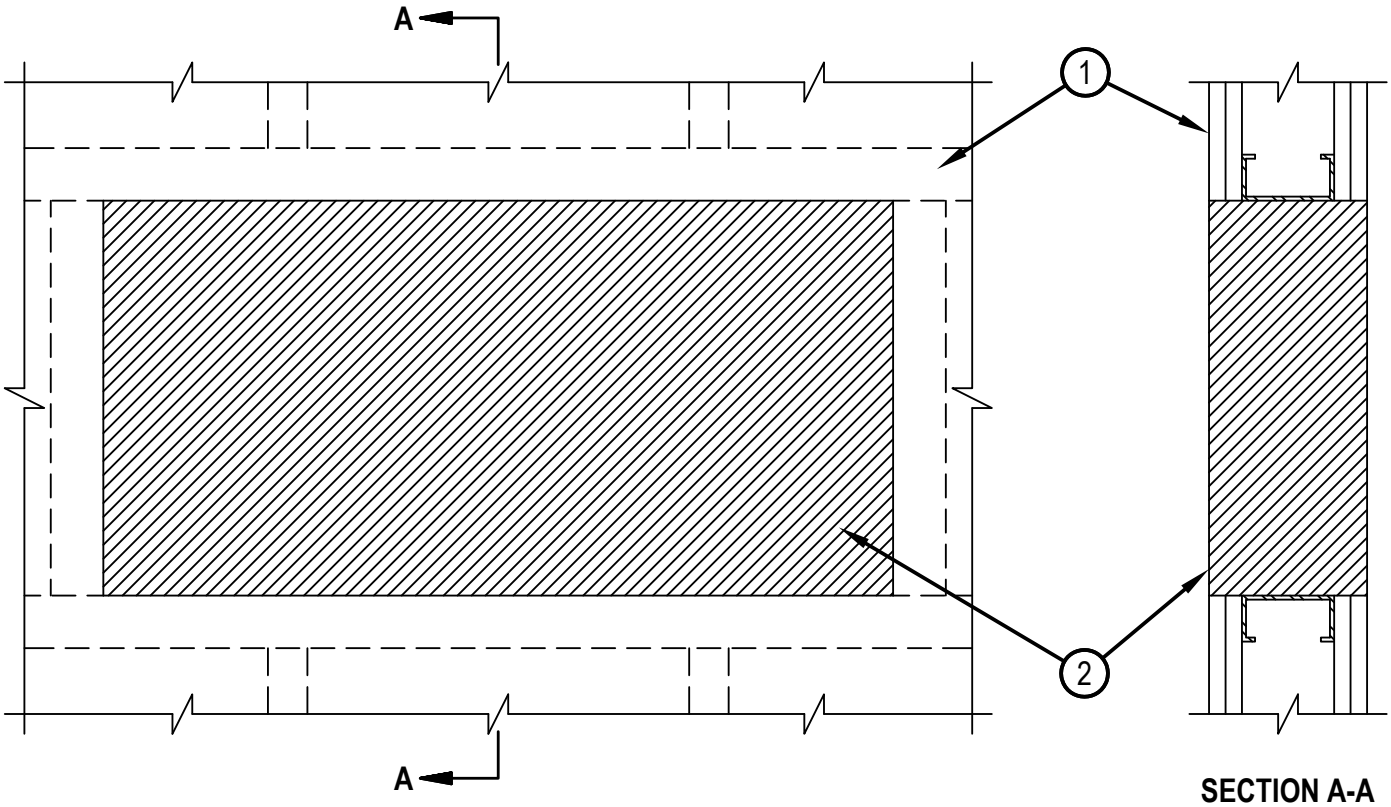

SECTION A-A

1. Wall Assembly -- The 1 or 2 hr fire-rated gypsum board/stud wall assembly shall be constructed of the materials and in the manner described in the individual U400 Series Wall or Partition Design in the UL Fire Resistance Directory and shall include the following construction features:

A. Studs -- Steel studs 3-1/2 in. deep, fabricated from 25 MSG galv steel, spaced max 24 in. OC.
B. Gypsum Board* -- The gypsum board type, number of layers, fastener type and sheet orientation shall be as specified in the individual

Wall and Partition Design. Max area of opening is 450 sq in with max dimension of 30 in.

The hourly F and T Ratings of the firestop system are equal to the hourly fire rating of the wall assembly in which it is installed.

2. Fill, Void or Cavity Material* -- Foam Fill material applied within annulus flush with both surfaces of the wall. Min fill material thickness for 1 hr F and T Ratings is 4-3/4 in. Min fill material thickness for 2 hr F and T Ratings is 6 in.

HILTI CONSTRUCTION CHEMICALS, DIV OF
HILTI INC -- CP 620 Fire Foam

*Bearing the UL Classification Mark

Reproduced by HILTI, Inc. Courtesy of
Underwriters Laboratories, Inc.
July 24, 2002

Classified by
Underwriters Laboratories, Inc.
to UL 1479 and CAN/ULC-S115

System No. W-L-0040

ANSI/UL1479 (ASTM E814)	CAN/ULC S115
F Ratings - 1 and 2 Hr (See Item 1)	F Ratings - 1 and 2 Hr (See Item 1)
T Ratings - 0 and 1-3/4 Hr (See Item 1)	FT Ratings - 0 and 1-3/4 Hr (See Item 1)
	FH Ratings - 1 and 2 Hr (See Item 1)
	FTH Ratings - 0 and 1-3/4 Hr (See Item 1)

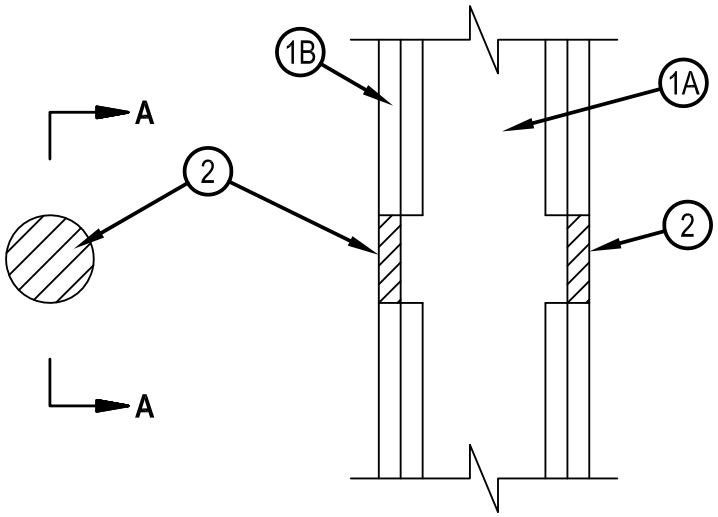

SECTION A-A

1. Wall Assembly — The 1 or 2 hr fire rated gypsum board/stud wall assembly shall be constructed of the materials and in the manner specified in the individual U300, U400, V400 or W400 Series Wall and Partition Designs in the UL Fire Resistance Directory and shall include the following construction features:
   A. Studs — Wall framing may consist of either wood studs or steel channel studs. Wood studs to consist of nom 2 by 4 in. (51 by 102 mm) lumber spaced 16 in. (406 mm) OC. Steel studs to be min 3-1/2 in. (89 mm) wide and spaced max 24 in. (610 mm) OC.
   B. Gypsum Board* — Thickness, type, number of layers and orientation shall be as specified in the individual Wall and Partition Design. Max diam of opening is 2-1/2 in. (64 mm) or a max area of 4 in. (25.8 cm2) with a max dimension of 2 in. (51 mm).
   The hourly F and FH Ratings of the firestop system are equal to the hourly fire rating of the wall assembly in which it is installed. The hourly T, FT and FTH Ratings of the firestop system are 0 and 1-3/4 hr for 1 and 2 hr rated assemblies, respectively.

2. Fill, Void or Cavity Material* — Sealant — Min 5/8 in. (16 mm) thickness of sealant applied within annulus, flush with both surfaces of wall. HILTI CONSTRUCTION CHEMICALS, DIV OF HILTI INC — FS-ONE Sealant or FS-ONE MAX Intumescent Sealant

* Indicates such products shall bear the UL or cUL Certification Mark for jurisdictions employing the UL or cUL Certification (such as Canada), respectively.

Reproduced by HILTI, Inc. Courtesy of
Underwriters Laboratories, Inc.
January 23, 2015

Classified by Underwriters Laboratories, Inc. to UL 1479 and CAN/ULC-S115

System No. W-L-0042

ANSI/UL1479 (ASTM E814)	CAN/ULC S115
F Ratings —1 and 2 Hr (See Item 1)	F Ratings — 1 and 2 Hr (See Item 1)
T Ratings — 0 and 1-1/2 Hr (See Item 1)	FT Ratings — 0 and 1-1/2 Hr (See Item 1)
	FH Ratings — 1 and 2 Hr (See Item 1)
	FTH Ratings — 0 and 1-1/2 Hr (See Item 1)

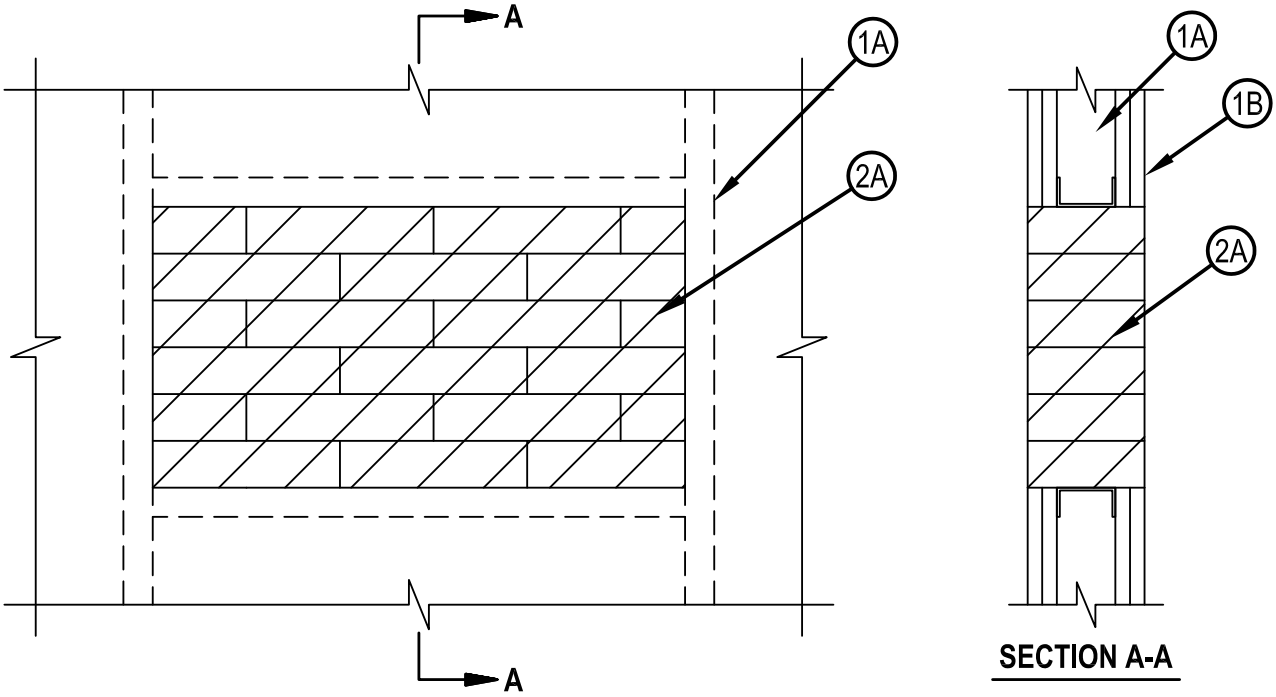

SECTION A-A

1. Wall Assembly — The 1 or 2 hr fire-rated gypsum board/stud wall assembly shall be constructed of the materials and in the manner specified if the individual U300, U400, V400 or W400 Series Wall and Partition Designs in the Fire Resistance Directory and shall include the following construction features:
   A. Studs — Wall framing shall consist of either wood studs or channel shaped steel studs. Wood studs to consist of 2 by 4 in. (51 by 102 mm) lumber spaced 16 in. (406 mm) OC. Steel studs to be min 2-1/2 in. (64 mm) wide, fabricated from min 25 MSG galvanized steel, spaced max 24 in. (610 mm) OC. Additional framing member shall be used to completely frame around opening.
   B. Gypsum Board* — Nom 5/8 in. (16 mm) thick with square or tapered edges. The gypsum board type, number of layers and sheet orientation shall be as specified in the individual Wall and Partition Design Number. Max area of opening is 273 in2 (1761 cm2) with max dimension of 22-3/4 in. (578 mm).
   The hourly F and FH Ratings of the firestop system are equal to the hourly fire rating of the wall assembly in which it is installed. The hourly T, FT and FTH Ratings of the firestop system are 0 hr for 1 hr rated walls and 1-3/4 hr for 2 hr rated walls.

2. Firestop System — The firestop system shall consist of the following:
   A. Fill Void or Cavity Materials*-Fire Blocks — Fire blocks installed with 5 in. (127 mm) dimension projecting through opening, centered within thickness of wall assembly. Blocks to be firmly packed and completely fill the entire opening. Blocks can be cut to smaller thickness where needed to assist in tight packing and filling any gaps or voids within opening.
   HILTI CONSTRUCTION CHEMICALS, DIV OF HILTI INC — CFS-BL Firestop Block
   B. Fill Void or Cavity Materials* — (Optional) Fill material applied to maximum extent possible to fill any voids that may exist within the opening.
   HILTI CONSTRUCTION CHEMICALS, DIV OF HILTI INC — FS-ONE Sealant or FS-ONE MAX Intumescent Sealant, or CP618 Putty Stick

* Indicates such products shall bear the UL or cUL Certification Mark for jurisdictions employing the UL or cUL Certification (such as Canada), respectively.

Hilti Firestop Systems

Reproduced by HILTI, Inc. Courtesy of Underwriters Laboratories, Inc.
January 23, 2015

Classified by
Underwriters Laboratories, Inc.
to UL 1479 and CAN/ULC-S115

System No. C-AJ-1149

ANSI/UL1479 (ASTM E814)	CAN/ULC S115
F Rating — 2 Hr	F Rating —2 Hr
T Rating — 0 Hr	FT Rating — 0 Hr
L Rating At Ambient — Less Than 1 CFM/sq ft	FH Rating — 2 Hr
L Rating At 400 F — 4 CFM/sq ft	FTH Rating — 0 Hr
W Rating — Class 1 (See Item 4)	L Rating At Ambient — Less Than 1 CFM/sq ft
	L Rating At 400 F — 4 CFM/sq ft

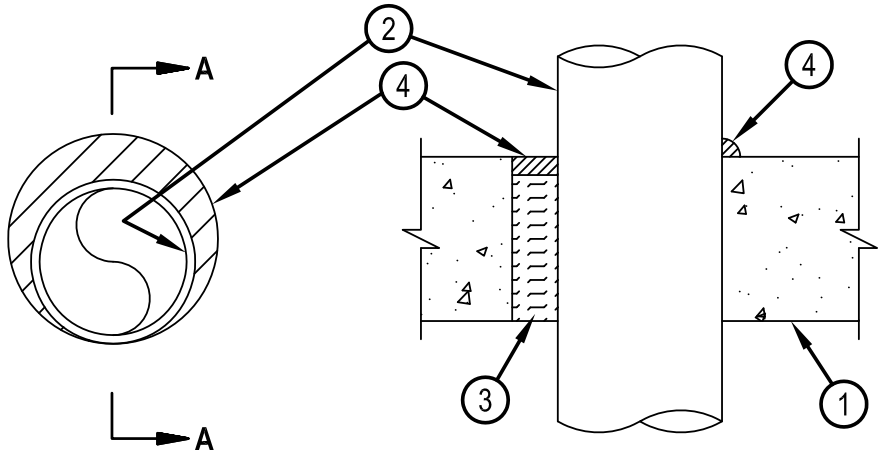

SECTION A-A

1. Floor or Wall Assembly — Min 4-1/2 in. (114 mm) thick reinforced lightweight or normal weight (100-150 pcf or 1600-2400 kg/m3) concrete. Wall may also be constructed of any UL Classified Concrete Blocks *. Max diam of opening is 12 in. (305 mm).

See Concrete Blocks (CAZT) category in the Fire Resistance Directory for names of manufacturers.

2. Through Penetrants — One metallic pipe, conduit or tubing to be installed within the firestop system. Pipe, conduit or tubing to be rigidly supported on both sides of floor or wall assembly. The annular space shall be 0 in. (point contact) to max 1-1/4 in. (32 mm). The following types and sizes of metallic pipes, conduits or tubing may be used:
   A. Steel Pipe — Nom 10 in. (254 mm) diam (or smaller) Schedule 10 (or heavier) steel pipe.
   B. Iron Pipe — Nom 10 in. (254 mm) diam (or smaller) cast or ductile iron pipe.
   C. Conduit — Nom 4 in. (102 mm) diam (or smaller) steel electrical metallic tubing or steel conduit.
   D. Copper Tubing — Nom 4 in. (102 mm) diam (or smaller) Type L (or heavier) copper tubing.
   E. Copper Pipe — Nom 4 in. (102 in.) diam (or smaller) Regular (or heavier) copper pipe.
3. Packing Material — Min 3 in. (76 mm) thickness of min 4 pcf (64 kg/m3) mineral wool batt insulation for nom 4 in. diam (and smaller) pipes, conduits or tubings and a min 4 in. (102 mm) thickness of min 4 pcf (64 kg/m3) mineral wool batt insulation for pipe greater than nom 4 in. diam, firmly packed into opening as a permanent form. Packing material to be recessed from top surface of floor or from both surfaces of wall to accommodate the required thickness of fill material.
4. Fill, Void or Cavity Material* — Sealant — Min 1/2 in. (13 mm) thickness of fill material applied within the annulus, flush with the top surface of floor or both surfaces of wall. At the point of contact location between pipe and concrete, a min 1/2 in. (13 mm) diam bead of fill material shall be applied at the concrete/pipe interface on the top surface of floor and on both surfaces of wall. W Rating applies only when CFS-S SIL GG, CFS-S SIL SL (floors only), CP601S or CP604 sealant is used.

HILTI CONSTRUCTION CHEMICALS, DIV OF HILTI INC — CP601S, CP604, CFS-S SIL GG, CFS-S SIL SL (floors only), CP606 or FS-ONE Sealant or FS-ONE MAX Intumescent Sealant.

* Indicates such products shall bear the UL or cUL Certification Mark for jurisdictions employing the UL or cUL Certification (such as Canada), respectively.

Hilti Firestop Systems

Reproduced by HILTI, Inc. Courtesy of
Underwriters Laboratories, Inc.
January 06, 2015

Classified by
Underwriters Laboratories, Inc.
to UL 1479 and CAN/ULC-S115

System No. C-AJ-1372

F Rating -- 3 Hr
T Rating -- 0 Hr
L Rating At Ambient -- Less Than 1 CFM/sq ft
L Rating At 400 F -- 4 CFM/sq ft

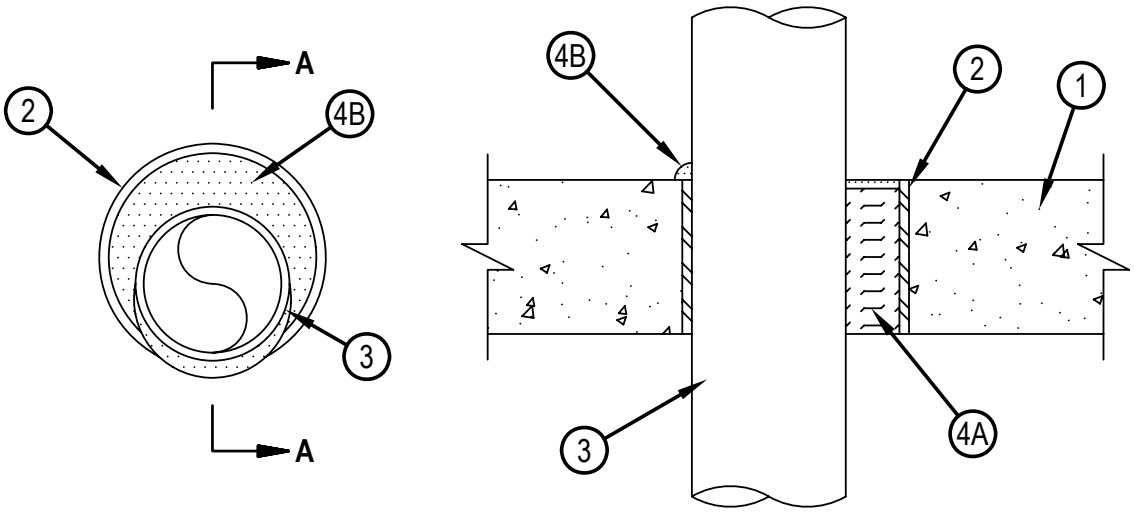

SECTION A-A

1. Floor or Wall Assembly -- Min 4-1/2 in. thick reinforced lightweight or normal weight (100-150 pcf) concrete. Wall may also be constructed of any UL Classified Concrete Blocks*. Max diam of opening is 10-1/2 in.
   See Concrete Blocks (CAZT) in the Fire Resistance Directory for names of manufacturers.
2. Metallic Sleeve -- (Optional) Nom 10 in. diam (or smaller) Schedule 40 (or heavier) steel sleeve cast or grouted into floor assembly, flush with floor surface.
3. Through-Penetrant -- One metallic pipe or conduit to be installed either concentrically or eccentrically withing the firestop system. The annular space between pipe or conduit and periphery of opening shall be min 0 in. (point contact) to max 1-7/8. Pipe or conduit to be rigidly supported on both sides of floor assembly. The following types and sizes of metallic pipes or conduits may be used:
   A. Steel Pipe -- Nom 8 in. diam (or smaller) Schedule 10 (or heavier) steel pipe.
   B. Cast Iron Pipe -- Nom 8 in. diam (or smaller) cast or ductile iron pipe.
   C. Copper Pipe -- Nom 4 in. diam (or smaller) Regular (or heavier) copper pipe.
   D. Copper Tubing -- Nom 4 in. diam (or smaller) Type L (or heavier) copper tubing.
   E. Conduit -- Nom 4 in. diam (or smaller) steel conduit.
   F. Conduit -- Nom 4 in. (or smaller) steel electrical metallic tubing (EMT).
4. Firestop System -- The firestop system shall consist of the following:
   A. Packing Materials -- Min 4-1/4 in. thickness of min 4 pcf mineral wool batt insulation firmly packed into opening as a permanent form. Packing material to be recessed from top surface of floor to accommodate the required thickness of fill material.
   B. Fill Void or Cavity Materials* - Sealant -- Min 1/4 in. thickness of fill material applied within annulus, flush with top surface of floor. At point contact location between pipe and concrete, a min 1/4 in. diam bead of fill material shall be applied at the concrete/pipe interface on the top surface of the floor.
   HILTI CONSTRUCTION CHEMICALS, DIV OF HILTI INC -- CP 606 Flexible Firestop Sealant

*Bearing the UL Classification Mark

Hilti Firestop Systems

Reproduced by HILTI, Inc. Courtesy of
Underwriters Laboratories, Inc.
October 26, 2002

Classified by
Underwriters Laboratories, Inc.
to UL 1479 and CAN/ULC-S115

System No. C-AJ-1453

F Rating — 2 Hr
T Ratings — 0 and 1/4 Hr (See Item 2)
L Rating At Ambient — Less Than 1 CFM/sq ft
L Rating At 400 F — 4 CFM/sq ft

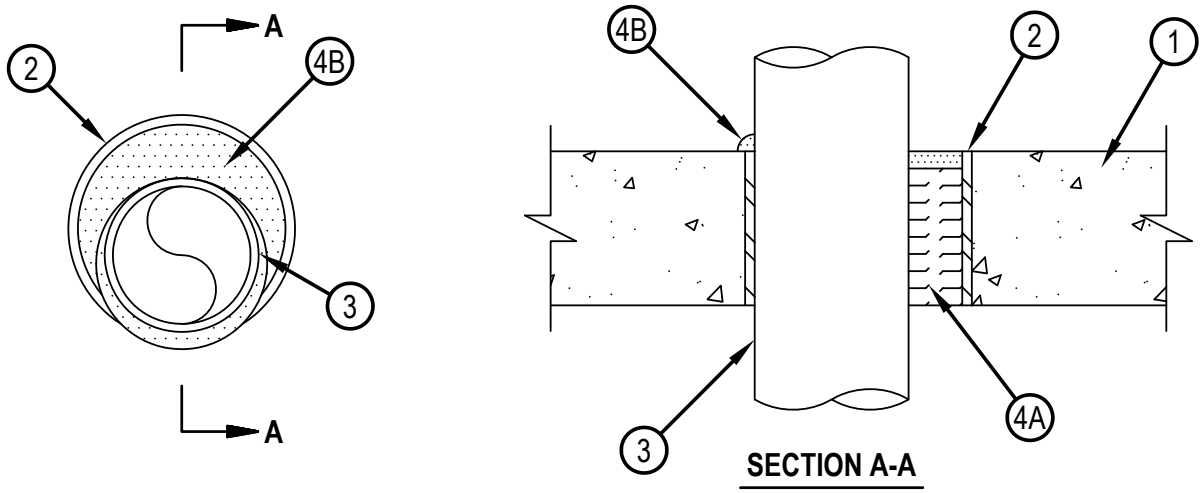

SECTION A-A

1. Floor or Wall Assembly — Min 4-1/2 in. (114 mm) thick reinforced lightweight or normal weight (100-150 pcf or 1600-2400 kg/m³) concrete. Wall may also be constructed of any UL Classified Concrete Blocks*. Max diam of opening is 32 in. (813 mm).
   See Concrete Blocks (CAZT) category in the Fire Resistance Directory for names of manufacturers.
2. Metallic Sleeve — (Optional) - Nom 32 in. (813 mm) diam (or smaller) Schedule 5 (or heavier) steel sleeve cast or grouted into floor or wall assembly, flush with floor or wall surfaces or extending max 3 in. (76 mm) above floor or beyond both surfaces of wall.

2A. Sheet Metal Sleeve — (Optional, Not Shown) - Max 6 in. (152 mm) diam, min No. 26 ga galv steel provided with a No. 26 ga galv steel square flange spot welded to the sleeve at approx mid-height, or flush with bottom of sleeve in floors, and sized to be a min of 2 in. (51 mm) larger than the sleeve diam. The sleeve is to be cast in place and may extend a max of 4 in. 9102 MM) below the bottom of the floor and a max of 1 in. (25 mm) above the top surface of the concrete floor.

2B. Sheet Metal Sleeve — (Optional, Not Shown) - Max 12 in. (305 mm) diam, min No. 24 ga galv steel provided with a No. 24 ga galv steel square flange spot welded to the sleeve at approx mid-height, or flush with bottom of sleeve in floors, and sized to be a min of 2 in. (51 mm) larger than the sleeve diam. The sleeve is to be cast in place and may extend a max of 4 in. (102 mm) below the bottom of the deck and a max of 1 in. (25 mm) above the top surface of the concrete floor.

3. Through Penetrants — One metallic pipe, conduit or tubing to be installed concentrically or eccentrically within the firestop system. Pipe, conduit or tubing to be rigidly supported on both sides of floor assembly. The annular space between pipe conduit or tubing and the periphery of the opening shall be min 0 in. (point contact) to max 2 in. (51 mm). The following types of pipe, conduit or tubing may be used:
   A. Steel Pipe — Nom 30 in. (762 mm) diam (or smaller) Schedule 10 (or heavier) steel pipe.
   B. Iron Pipe — Nom 30 in. (762 mm) diam (or smaller) cast or ductile iron pipe.
   C. Conduit — Nom 6 in. (152 mm) diam (or smaller) rigid steel conduit.
   D. Conduit — Nom 4 in. (102 mm) diam (or smaller) steel electrical metallic conduit.
   E. Copper Tubing — Nom 6 in. (152 mm) diam (or smaller) Type L (or heavier) copper tubing.
   F. Copper Pipe — Nom 6 in. (152 mm) diam (or smaller) Regular (or heavier) copper pipe.
4. Firestop System — The firestop system shall consist of the following:
   A. Packing Material — Min 4 in. (102 mm) thickness of min 4 pcf (64 kg/m³) mineral wool batt insulation firmly packed into the opening as a permanent form. Packing material to be recessed from the top surface of the floor to accommodate the required thickness of fill material.
   B. Fill, Void or Cavity Materials* Sealant — Min 1/2 in. (13 mm) thickness of fill material applied within the annulus, flush with top surface of floor. At point contact, a min 1/4 in. (6 mm) diameter bead of fill material shall be applied at the pipe/sleeve interface on the top surface of the floor or both surfaces of wall.
   HILTI CONSTRUCTION CHEMICALS, DIV OF HILTI INC — CP 606 Flexible Firestop Sealant

*Bearing the UL Classification Mark

Hilti Firestop Systems

Reproduced by HILTI, Inc. Courtesy of
Underwriters Laboratories, Inc.
July 18, 2011

Classified by
Underwriters Laboratories, Inc.
to UL 1479 and CAN/ULC-S115

System No. C-AJ-1498

ANSI/UL1479 (ASTM E814)	CAN/ULC S115
F Rating — 2 Hr	F Rating — 2 Hr
T Rating — 0 Hr	FT Rating — 0 Hr
W Rating — Class 1	FH Rating — 2 Hr
	FTH Rating — 0 Hr

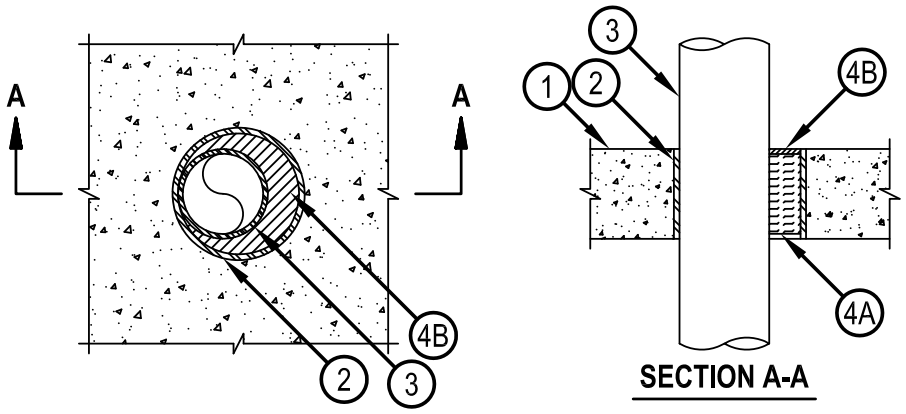

1. Floor or Wall Assembly — Min 4-1/2 in. (114 mm) thick reinforced normal weight (100-150 pcf or 1600-2400 kg/m³) concrete. Wall may also be constructed of any UL Classified Concrete Blocks*. Max diam of opening is 10 in. (254 mm).
   See Concrete Blocks (CAZT) category in the Fire Resistance Directory for names of manufacturers.
2. Steel Sleeve — (Optional) - Nom 10 in. (254 mm) diam (or smaller) Schedule 10 (or heavier) steel pipe cast or grouted into floor or wall assembly, flush with both floor or wall surfaces.

2A. Sheet Metal Sleeve — (Optional, Not Shown) Max 6 in. (152 mm) diam, min 26 ga (0.5 mm) galv steel provided with a 26 ga (0.5 mm) galv steel square flange spot welded to the sleeve at approx mid-height, or flush with bottom of sleeve in floors, and sized to be a min of 2 in. (51 mm) larger than the sleeve diam. The sleeve is to be cast in place and may extend a max of 4 in. (102 mm) below the bottom of the floor and a max of 1 in. (25 mm) above the top surface of the concrete floor.

2B. Sheet Metal Sleeve — (Optional, Not shown) - Max 10 in. (254 mm) diam, min 24 ga (0.6 mm) galv steel provided with a 24 ga (0.6 mm) galv steel square flange spot welded to the sleeve at approx mid-height, or flush with bottom of sleeve in floors, and sized to be a min of 2 in. (51 mm) larger than the sleeve diam. The sleeve is to be cast in place and may extend a max of 4 in. (102 mm) below the bottom of the floor and a max of 1 in. (25 mm) above the top surface of the concrete floor or a min 1 in. (25 mm) on both surfaces of the wall assembly.

3. Through-Penetrant — One metallic pipe, tube or conduit to be installed either concentrically or eccentrically within the firestop system. The annular space between penetrant and periphery of opening shall be min 0 in. (0 mm, point contact) to max 2 in. (51 mm). Penetrant to be rigidly supported on both sides of floor or wall assembly. The following types and sizes of metallic penetrants may be used:
   A. Steel Pipe — Nom 8 in. (203 mm) diam (or smaller) Schedule 10 (or heavier) steel pipe.
   B. Iron Pipe — Nom 8 in. (203 mm) diam (or smaller) cast or ductile iron pipe.
   C. Copper Pipe — Nom 4 in. (102 mm) diam (or smaller) Regular (or heavier) copper pipe.
   D. Copper Tubing — Nom 4 in. (102 mm) diam (or smaller) Type L (or heavier) copper tubing.
   E. Conduit — Nom 6 in. diam (152 mm) (or smaller) rigid steel conduit.
   F. Conduit — Nom 4 in. diam (102 mm) (or smaller) steel electrical metallic tubing (EMT).
4. Firestop System — The firestop system shall consist of the following:
   A. Packing Material — Min 4 in. (102 mm) thickness of 4 pcf (64 kg/m³) mineral wool batt insulation tightly packed into the opening as a permanent form. Packing material to be recessed from top surface of floor or both surfaces of wall to accommodate the required thickness of fill material.
   B. Fill, Void or Cavity Material* - Sealant — Min 1/4 in. (6 mm) thickness of fill material applied within the annulus flush with the top surface of the floor or both surfaces of the wall.
   HILTI CONSTRUCTION CHEMICALS, DIV OF HILTI INC — CFS-S SIL GG, CFS-S SIL SL (floors only) or CP 601S Sealant

*Bearing the UL Classification Mark

Hilti Firestop Systems

Reproduced by HILTI, Inc. Courtesy of
Underwriters Laboratories, Inc.
December 20, 2013

Classified by
Underwriters Laboratories, Inc.
to UL 1479 and CAN/ULC-S115

System No. C-AJ-1513

ANSI/UL1479 (ASTM E814)	CAN/ULC S115
F Rating - 2 Hr	F Rating - 2 Hr
T Rating - 0 Hr	FT Rating - 0 Hr
	FH Rating - 2 Hr
	FTH Rating - 0 Hr

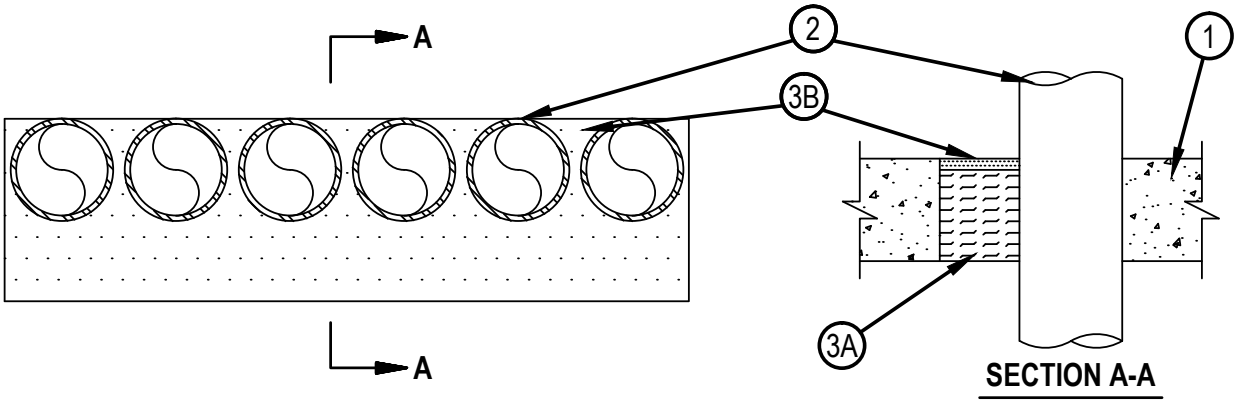

SECTION A-A

1. Floor or Wall Assembly — Min 4-1/2 in. (114 mm) thick reinforced lightweight or normal weight (100-150 pcf or 1600-2400 kg/m3) concrete floor. Min 5 in. (127 mm) thick reinforced lightweight or normal weight (100-150 pcf or 1600-2400 kg/m3) concrete wall. Wall may also be constructed of any UL Classified Concrete Blocks*. Max size of opening is 8 in. (203 mm) by 30 in. (763 mm).
   See Concrete Blocks (CAZT) category in the Fire Resistance Directory for names of manufacturers.
2. Through Penetrants — One or more metallic penetrants to be installed either concentrically or eccentrically within the firestop system. The total number of penetrants is dependent on the size of the opening and sizes of penetrants. The annular space between the penetrants and periphery of opening shall be min 0 in. (point contact). The annular space between nom 2 in. (51 mm) diam (and smaller) penetrants shall be a min 0 in. (point contact). The annular space between penetrants greater than nom 2 in. (51 mm) diam shall be a min. 1/2 in. (13 mm). A max annular space in the system shall be 12 in. (305 mm). Penetrants to be rigidly supported on both sides of floor or wall assembly. The following types and sizes of penetrants may be used:
   A. Conduit — Nom 4 in. (102 mm) diam (or smaller) steel electrical metallic tubing or rigid steel conduit
   B. Through Penetrating Product* — Flexible Metal Piping — The following types of steel flexible metal gas piping may be used:
      1.) Nom 2 in. (51 mm) diam (or smaller) steel flexible metal gas piping. Plastic covering on piping may or may not be removed on both sides of floor or wall assembly.
      OMEGA FLEX INC
      2.) Nom 1 in. (25 mm) diam (or smaller) steel flexible metal gas piping. Plastic covering on piping may or may not be removed on both sides of floor or wall assembly.
      GASTITE, DIV OF TITEFLEX
      3.) Nom 2 in. (51 mm) diam (or smaller) steel flexible metal gas piping. Plastic covering on piping may or may not be removed on both sides of floor or wall assembly.
      WARD MFG L L C
3. Firestop System — The firestop system shall consist of the following:
   A. Packing Material — Min 4 in. (102 mm) thickness of 4 pcf (64 kg/m3) mineral wool batt insulation tightly packed into the opening as a permanent form. Packing material to be recessed from top surface of floor or both surfaces of wall to accommodate the required thickness of fill material.
   B. Fill, Void or Cavity Material - Sealant* — Min 1/2 in. (13 mm) thickness of fill material applied within the annulus flush with the top surface of the floor or both surfaces of the wall.
   HILTI CONSTRUCTION CHEMICALS, DIV OF HILTI INC — FS-ONE Sealant or FS-ONE MAX Intumescent Sealant.

* Indicates such products shall bear the UL or cUL Certification Mark for jurisdictions employing the UL or cUL Certification (such as Canada), respectively.

Hilti Firestop Systems

Reproduced by HILTI, Inc. Courtesy of
Underwriters Laboratories, Inc.
January 08, 2015

Classified by
Underwriters Laboratories, Inc.
to UL 1479 and CAN/ULC-S115

System No. C-AJ-1517

F Rating — 2 Hr
T Rating — 0 Hr
L Rating At Ambient — Less Than 1 CFM/sq ft
L Rating At 400 F — Less Than 1 CFM/sq ft

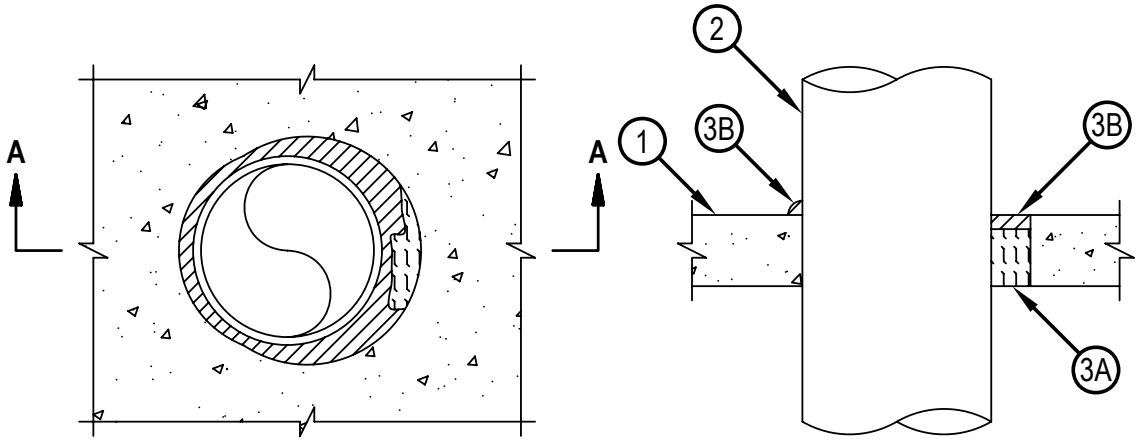

SECTION A-A

1. Floor or Wall Assembly — Min 2-1/2 in. (64 mm) thick reinforced lightweight or normal weight (100-150 pcf (1602-2403 kg/m3)) concrete. Wall may also be constructed of any UL Classified Concrete Blocks*. Max diam of opening is 26 in. (660mm).
   See Concrete Blocks (CAZT) category in the Fire Resistance Directory for names of manufacturers.
2. Through Penetrant — One metallic pipe, conduit or tubing to be installed concentrically or eccentrically within the firestop system. Penetrant to be rigidly supported on both sides of floor or wall assembly. The annular space between pipe, conduit or tubing shall be min 0 in. (0 mm) (point contact) to max 2 in. (51 mm). The following types and sizes of penetrant may be used:
   A. Steel Pipe — Nom 24 in. (610mm) diam (or smaller) Schedule 10 (or heavier) steel pipe.
   B. Iron Pipe — Nom 24 in. (610mm) diam (or smaller) cast or ductile iron pipe.
   C. Conduit — Nom 4 in. (102mm) diam (or smaller) steel electrical metallic tubing or nom 6 in. (152mm) diam rigid steel conduit.
   D. Copper Tubing — Nom 6 in. (152mm) diam (or smaller) Type L (or heavier) copper tubing.
   E. Copper Pipe — Nom 6 in. (152mm) diam (or smaller) Regular copper pipe.
3. Firestop System — The firestop system shall consist of the following:
   A. Packing Material — Min 2 in. (51mm) thickness of min 4 pcf (64 kg/m3) mineral wool batt insulation firmly packed into opening as a permanent form. Packing material to be recessed from top surface of floor or from both surfaces of wall to accommodate the required thickness of fill material.
   B. Fill Void or Cavity Material* - Sealant — Min 1/2 in. (13mm) thickness of fill material applied within the annulus, flush with top surface of floor or with both surfaces of wall. At the point contact location between pipe and concrete, a min 1/2 in. (13mm) diam bead of fill material shall be applied at the concrete/pipe interface on the top surface of floor or both surfaces of wall.
   HILTI CONSTRUCTION CHEMICALS, DIV OF HILTI INC — CP 606 Sealant

*Bearing the UL Classification Mark

Hilti Firestop Systems

Reproduced by HILTI, Inc. Courtesy of
Underwriters Laboratories, Inc.
July 09, 2010

Classified by
Underwriters Laboratories, Inc.
to UL 1479 and CAN/ULC-S115

System No. C-AJ-1575

ANSI/UL1479 (ASTM E814)	CAN/ULC S115
F Ratings — 2 and 3 Hr (See Item 4B)	F Ratings — 2 and 3 Hr (See Item 4B)
T Rating — 0 Hr	FT Rating — 0 Hr
	FH Ratings — 2 and 3 Hr (See Item 4B)
	FTH Rating — 0 Hr

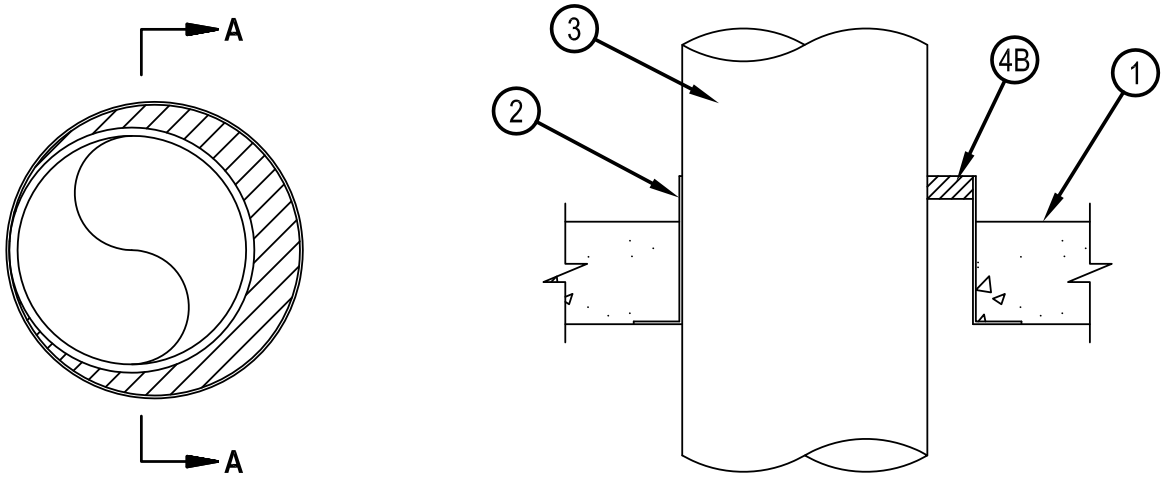

SECTION A-A

1. Floor or Wall Assembly — Min 2-1/2 in. (64 mm) thick reinforced lightweight or normal weight (100-150 pcf or 1600-2400 kg/m3) concrete. Wall may also be constructed of any UL Classified Concrete Blocks*. Floor may also be constructed of any min 6 in. (152 mm) thick UL Classified hollow core Precast Concrete Units*. Max diam of opening is 30-7/8 in. (784 mm) when concrete floor or wall is used and max 7 in. (178 mm) when precast concrete units are used.

   See Concrete Blocks (CAZT) and Precast Concrete Units (CFTV) categories in the Fire Resistance Directory for names of manufacturers.

1A. Floor Assembly - (Optional - Not Shown) — The fire rated unprotected concrete and steel floor assembly shall be constructed of the materials and in the manner specified in the individual D900 Series designs in the UL Fire Resistance Directory and as summarized below:

   A. Concrete — Min 2-1/2 in. (114 mm) thick reinforced lightweight or normal weight (100-150 pcf or 1600-2400 kg/m3) concrete.

   B. Steel Floor and Form Units* — Composite or non-composite max 3 in. (76 mm) deep galv steel fluted units as specified in the individual Floor-Ceiling Design.

2. Steel Sleeve — See Table in Item 4B for when sleeve is required. Also not required for hollow core precast concrete floors. Schedule 10 (or heavier) steel sleeve cast or grouted into floor or wall assembly. Sleeve may extend a max of 8 in. (203 mm) above top of floor or beyond either surface of wall. As an alternate, in floors only, min 26 gauge galvanized sheet steel sleeve provided with a min. 26 gauge galvanized steel square flange spot welded to the bottom of the sleeve and sized to be a min of 2 in. (51 mm) larger than the sleeve diam. The sheet metal sleeve is to be cast in place and may extend a max of 2 in. (51 mm) above the top surface of the concrete floor, except that when sleeve is greater than nom 13 in. (330 mm) diam, sleeve shall be installed flush with both surfaces of floor.

Reproduced by HILTI, Inc. Courtesy of
Underwriters Laboratories, Inc.
January 29, 2015

3. Through-Penetrants — One metallic pipe, conduit or tubing to be installed either concentrically or eccentrically within the firestop system. The annular space between pipe, conduit or tubing and periphery of opening or sleeve shall be min 0 in. (point contact). See Table in Item 4B for max annular space. Pipe, conduit or tubing to be rigidly supported on both sides of floor or wall assembly. The following types and sizes of metallic pipes, conduits or tubing may be used:
   A. Steel Pipe — Nom 30 in. (762 mm) diam (or smaller) Schedule 10 (or heavier) steel pipe.
   B. Iron Pipe — Nom 30 in. (762 mm) diam (or smaller) cast or ductile iron pipe.
   C. Conduit — Nom 6 in. (152 mm) diam (or smaller) rigid steel conduit.
   D. Conduit — Nom 4 in. (102 mm) diam (or smaller) electrical metallic tubing (EMT).
   E. Copper Tubing — Nom 6 in. (152 mm) diam (or smaller) Type L (or heavier) copper tubing.
   F. Copper Pipe — Nom 6 in. (152 mm) diam (or smaller) regular (or heavier) copper pipe.
4. Firestop System — The firestop system shall consist of the following:
   A. Packing Material — (Not Shown.) - Min 1 in. (25 mm) thickness of polyethylene backer rod, mineral wool batt or glass fiber insulation firmly packed into opening as a permanent form. Packing material to be recessed from top or bottom surface of floor/sleeve or from both surfaces of wall/sleeve to accommodate the required thickness of fill material (Item 4B). Packing material is required as specified in Table below.
   A1. Forming Materials* — (Optional, Not Shown) As an alternate to Item 4A, min 1 in. (25 mm) thickness of forming material to be foamed into the opening as a permanent form. Forming material to be recessed from top or bottom surface of floor/sleeve or from both surfaces of wall/sleeve to accommodate the required thickness of fill material (Item 4B).
   HILTI CONSTRUCTION CHEMICALS, DIV OF HILTI INC — CF812 or CF-AS CJP Foam Sealant
   B. Fill, Void or Cavity Materials* — Sealant — Applied to fill the annular space flush with top or bottom surface of floor/sleeve. In hollow core precast concrete floors, fill material to be installed flush with the bottom of the floor. Fill material may optionally be installed flush with the top of the assembly. In wall assemblies, fill material to be installed symmetrically on both sides of wall or floor, flush with wall/sleeve or floor surface. In wall assemblies, an additional bead of fill material shall be applied at the point contact location between penetrant and sleeve or between penetrant and concrete, at top surface of floor/sleeve and at both surfaces of wall/sleeve. The bead shall be min 1/2 in. (13 mm) diam and shall extend over the point contact location to the 1/4 in. (6 mm) annular space. The min required fill material thickness and the location of the sealant at top or bottom of floor opening are dependent upon a number of parameters, as shown in the table below.
   HILTI CONSTRUCTION CHEMICALS, DIV OF HILTI INC — FS-ONE Sealant or FS-ONE MAX Intumescent Sealant

Min Floor or Wall Thick, In. (mm)	Nom Diam of Copper Pipe or Tube In. (mm)	Nom Diam of Steel/Iron Pipe or Conduit In. (mm)	Max Annular Space In. (mm)	Min Sealant Thick. In. (mm)	Sealant Flush with Top or Bottom	Sleeve	Packing Mtl	F Rating Hr
2-1/2 (64)	½ - 4(13 - 102)	½ - 30 (13 - 762)	7/8 (22)	½ (13)	Top	No	No	2
2-1/2 (64)	½ - 4(13 - 102)	½ - 8(13 - 203)	2-7/8 (73)	1 (25)	Top	Yes	No	2
2-1/2 (64)	½ - 4(13 - 102)	½ - 8(13 - 203)	1-7/8 (48)	½ (13)	Top	Yes	No	2
2-1/2 (64)	½ - 4(13 - 102)	½ - 12(13 - 305)	7/8 (22)	1 (25)	Bottom	Yes	No	2
2-1/2 (64)	½ - 4(13 - 102)	½ - 8(13 - 203)	2-7/8 (73)	1 (25)	Top	Optional	Yes	2
2-1/2 (64)	½ - 6(13 - 152)	½ - 30 (13 - 762)	2-7/8 (73)	1 (25)	Top	Yes	Yes	2
4-1/2 (114)	½ - 4(13 - 102)	½ - 10(13 - 254)	3-1/4 (83)	1 (25)	Top or Bottom	No	No	3
4-1/2 (114)	½ - 4(13 - 102)	½ - 30(13 - 762)	7/8 (22)	½ (13)	Top	No	No	3
4-1/2 (114)	½ - 4(13 - 102)	½ - 8(13 - 203)	1-7/8 (48)	½ (13)	Bottom	No	No	2

* Indicates such products shall bear the UL or cUL Certification Mark for jurisdictions employing the UL or cUL Certification (such as Canada), respectively.

Reproduced by HILTI, Inc. Courtesy of
Underwriters Laboratories, Inc.
January 29, 2015

Customer Hotline: Hong Kong 8228 8118, Macau 00800 8228 8118 Email: hksales@hilti.com

Classified by
Underwriters Laboratories, Inc.
to UL 1479 and CAN/ULC-S115

System No. W-J-1068

ANSI/UL1479 (ASTM E814)	CAN/ULC S115
F Rating — 4 Hr	F Rating — 4 Hr
T Rating — 0 Hr	FT Rating — 0 Hr
	FH Rating — 4 Hr
	FTH Rating — 0 Hr

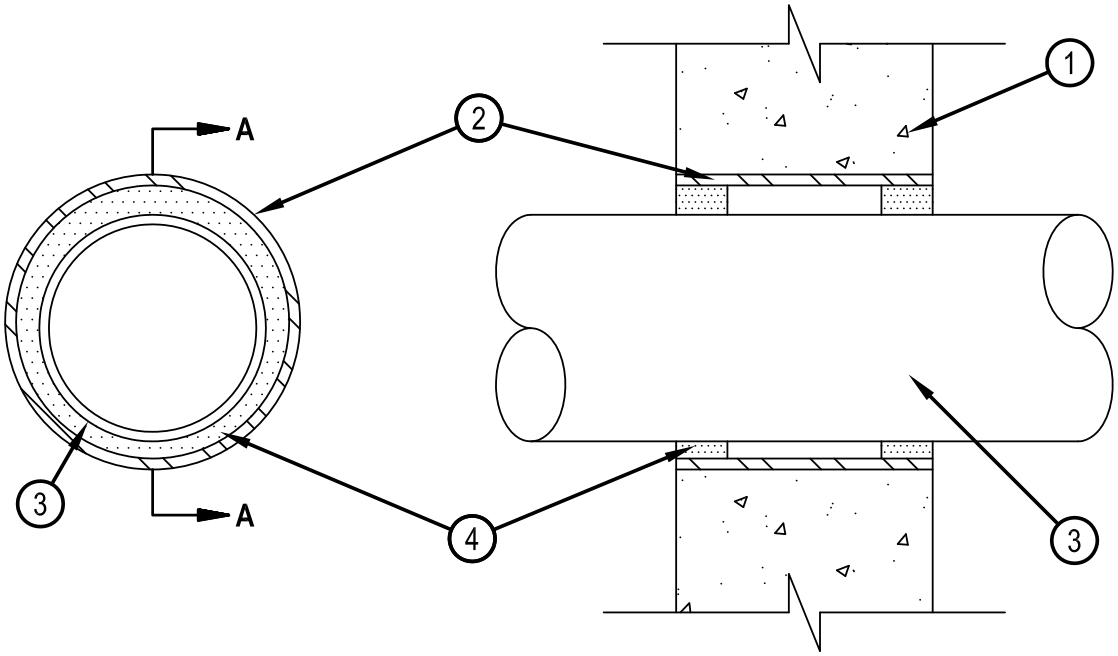

SECTION A-A

1. Wall Assembly — Min 7-1/2 in. (191 mm) thick reinforced lightweight or normal weight (100-150 pcf or 1600-2400 kg/m3) concrete. Wall may also be constructed of any UL Classified Concrete Blocks*. Max diam of opening is 8 in. (203 mm).
   See Concrete Blocks (CAZT) category in the Fire Resistance Directory for names of manufacturers.
2. Steel Sleeve — Nom 8 in. (203 mm) diam (or smaller) Schedule 40 (or heavier) steel pipe sleeve friction fit in nom 8 in. (203 mm) diam circular opening core drilled through wall. Length of steel sleeve to be equal to thickness of wall.
3. Through- Penetrant — One metallic pipe or tubing installed either concentrically or eccentrically within the firestop system. The annular space between pipe or tubing and the steel sleeve shall be min of 1/2 in. (13 mm) to max 1-1/4 in. (32 mm). Pipe or tubing to be rigidly supported on both sides of wall assembly. The following types and sizes of metallic pipes or tubing may be used:
   A. Steel Pipe — Nom 6 in. (152 mm) diam (or smaller) Schedule 10 (or heavier) steel pipe.
   B. Steel Conduit — Nom 4 in. (102 mm) diam (or smaller) steel electrical metallic tubing.
   C. Copper Tubing — Nom 6 in. (152 mm) diam (or smaller) Type L (or heavier) copper tubing.
   D. Copper Pipe — Nom 6 in. (152 mm) diam (or smaller) Regular (or heavier) copper pipe.
4. Fill, Void or Cavity Material*—Sealant — Min 1-1/2 in. (38 mm) thickness of fill material applied within the annulus, flush with both surfaces of the wall.
   HILTI CONSTRUCTION CHEMICALS, DIV OF HILTI INC — FS-ONE Sealant or FS-ONE-MAX Intumescent Sealant

* Indicates such products shall bear the UL or cUL Certification Mark for jurisdictions employing the UL or cUL Certification (such as Canada), respectively.

Hilti Firestop Systems

Reproduced by HILTI, Inc. Courtesy of
Underwriters Laboratories, Inc.
January 22, 2015

Classified by
Underwriters Laboratories, Inc.
to UL 1479 and CAN/ULC-S115

System No. W-J-1128

F Rating — 2 Hr
T Rating — 0 Hr
L Rating At Ambient — Less Than 1 CFM/sq ft
L Rating At 400 F — Less Than 1 CFM/sq ft

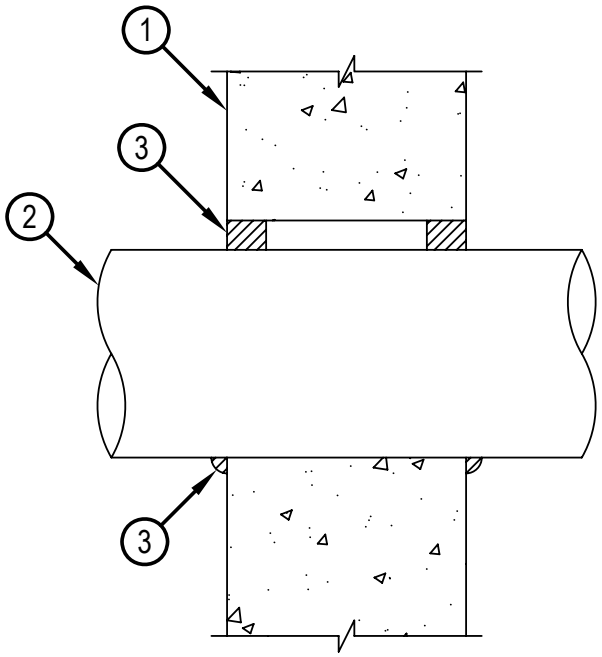

1. Wall Assembly — Min 5 in. thick reinforced lightweight or normal weight (100-150 pcf) concrete. Wall may also be constructed of any UL Classified Concrete Blocks*. Max diameter of opening 31-7/8 in.
   See Concrete Blocks (CAZT) category in the Fire Resistance Directory for names of manufacturers
2. Through Penetrant — One metallic pipe, conduit or tubing installed concentrically or eccentrically within the firestop system. Pipe, conduit or tube to be rigidly supported on both sides of wall assembly. The annular space between the pipe, conduit or tube and periphery of the opening shall be min 0 in (point contact) to max 1-7/8 in. The following types and sizes of metallic pipes, conduit or tube may be used:
   A. Steel Pipe — Nom 30 in. diam (or smaller) Schedule 40 (or heavier) steel pipe.
   B. Iron Pipe — Nom 30 in. diam (or smaller) cast or ductile iron pipe.
   C. Conduit — Nom 4 in. diam (or smaller) steel electrical metallic tubing (EMT) or 6 in. diam steel conduit.
   D. Copper Tube — Nom 6 in. diam (or smaller) Type L (or heavier) copper tube.
   E. Copper Pipe — Nom 6 in. diam (or smaller) Regular (or heavier) copper pipe.
3. Fill, Void or Cavity Material*-Sealant — Min 1-1/4 in. thickness of fill material applied within the annulus, flush with both surfaces of wall. At the point contact location between pipe and wall, a min ½ in. diam bead of fill material shall be applied at the pipe/wall interface.
   HILTI CONSTRUCTION CHEMICALS, DIV OF HILTI INC — CP606 Flexible Firestop Sealant

*Bearing the UL Classification Mark

Hilti Firestop Systems

Reproduced by HILTI, Inc. Courtesy of
Underwriters Laboratories, Inc.
July 09, 2010

Classified by
Underwriters Laboratories, Inc.
to UL 1479 and CAN/ULC-S115

System No. W-L-1297

F Ratings -- 1 and 2 Hr (See Item 1)
T Rating -- 0 Hr
L Rating at Ambient -- Less than 1 CFM/Sq Ft
L Rating at 400° F -- Less than 1 CFM/Sq Ft

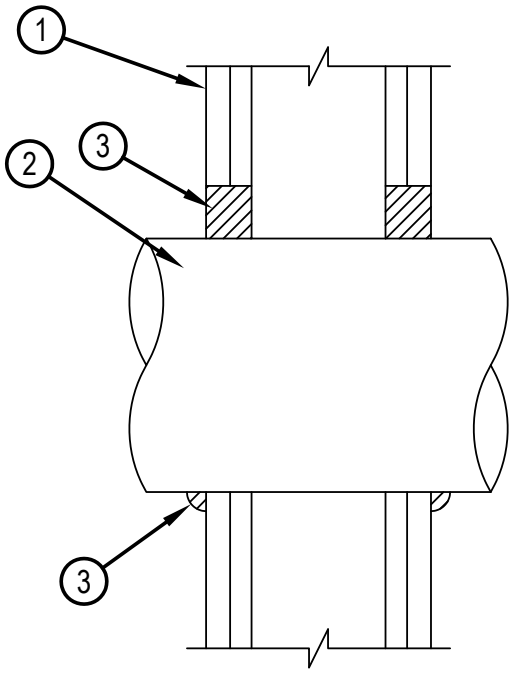

1. Wall Assembly -- The 1 or 2 hr fire rated gypsum board/stud wall assembly shall be constructed of the materials and in the manner specified in the individual U300, U400 or V400 Series Wall and Partition Designs in the UL Fire Resistance Directory and shall include the following construction features.
   A. Studs -- Wall framing shall consist of either wood studs or steel channel studs. Wood studs to consist of nom 2 by 4 in. (51 by 102 mm) lumber spaced 16 in. (406 mm) OC. Steel studs to be min 2-1/2 in. (64 mm) wide and spaced max 24 in. (610 mm) OC.
   B. Gypsum Board* -- Nom 5/8 in. (16 mm) thick, 4 ft (1.22 m) wide with square or tapered edges. The gypsum board type, thickness, number of layers, fastener type and sheet orientation shall be as specified in the individual U300, U400 or V400 Series Design in the Fire Resistance Directory. Max diam of opening is 32 in. (813 mm).
   The hourly F Rating of the firestop system is equal to the hourly fire rating of the wall assembly in which it is installed.
2. Through Penetrant -- One metallic pipe, conduit or tubing installed concentrically or eccentrically within the firestop system. Pipe, conduit or tubing may be installed at an angle not greater than 45 degrees from perpendicular. Pipe, conduit or tube to be rigidly supported on both sides of wall assembly. The annular space between the pipe, conduit or tube and periphery of the opening shall be min 0 in (0 mm, point contact) to max 2 in. (51 mm) in 2 hr fire rated walls and min 0 in (0 mm, point contact) to max 1 in. (25 mm) in 1 hr fire rated walls. The following types and sizes of metallic pipes, conduit or tube may be used:
   A. Steel Pipe -- Nom 30 in. (762 mm) diam (or smaller) Schedule 40 (or heavier) steel pipe.
   B. Iron Pipe -- Nom 30 in. (762 mm) diam (or smaller) cast or ductile iron pipe.
   C. Conduit -- Nom 4 in. (102 mm) diam (or smaller) steel electrical metallic tubing (EMT) or 6 in. diam steel conduit.
   D. Copper Tube -- Nom 6 in. (152 mm) diam (or smaller) Type L (or heavier) copper tube.
   E. Copper Pipe -- Nom 6 in. (152 mm) diam (or smaller) Regular (or heavier) copper pipe.
3. Fill, Void or Cavity Material*-Sealant -- Min 5/8 in. (16 mm) or 1-1/4 in. (32 mm) thickness of fill material applied within the annulus, flush with both surfaces of wall, for 1 hr and 2 hr fire rated wall assemblies, respectively. A min 1/2 in. (13 mm) diam bead of fill material shall be applied at the pipe/wall interface at the point contact location.
   HILTI CONSTRUCTION CHEMCIALS, DIV OF HILTI INC -- CP606 Flexible Firestop Sealant

*Bearing the UL Classification Mark

Hilti Firestop Systems

Reproduced by HILTI, Inc. Courtesy of
Underwriters Laboratories, Inc.
June 03, 2005

System No. W-L-1410

Classified by Underwriters Laboratories, Inc. to UL 1479 and CAN/ULC-S115

ANSI/UL1479 (ASTM E814)	CAN/ULC S115
F Ratings — 1 and 2 Hr (See Item 1)	F Ratings — 1 and 2 Hr (See Item 1)
T Rating — 0 Hr	FT Rating — 0 Hr
	FH Ratings — 1 and 2 Hr (See Item 1)
	FTH Rating — 0 Hr

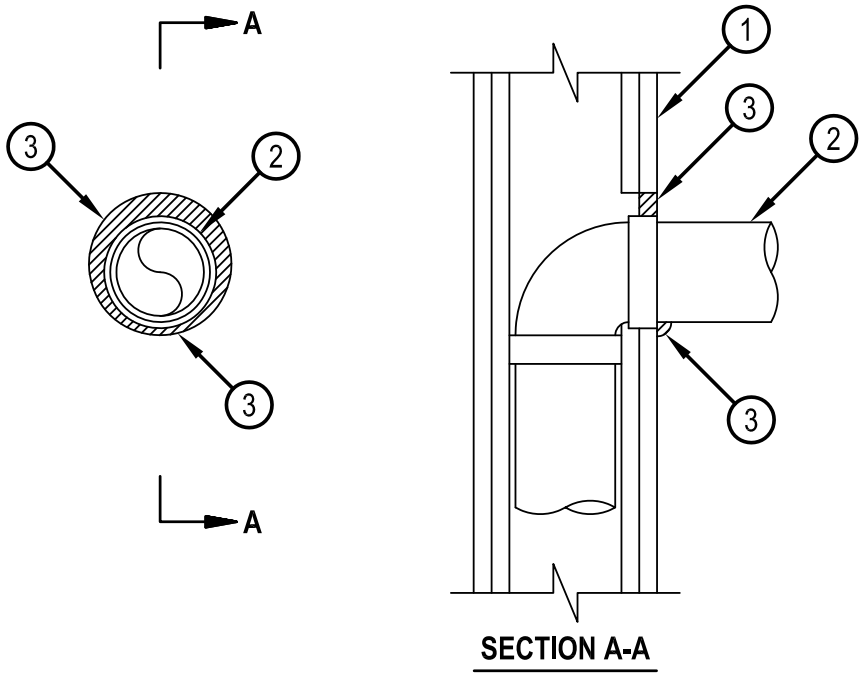

SECTION A-A

1. Wall Assembly — The 1 or 2 hr fire rated gypsum board/stud wall assembly shall be constructed of the materials and in the manner specified in the individual U300, U400, V400 or W400 Series Wall and Partition Designs in the UL Fire Resistance Directory and shall include the following construction features:
   A. Studs — Wall framing may consist of either wood studs or steel channel studs. Wood studs to consist of nom 2 by 4 in. (51 by 102 mm) lumber spaced 16 in. (406 mm) OC. Steel studs to be min 3-1/2 in. (89 mm) wide and spaced max 24 in. (610 mm) OC.
   B. Gypsum Board* — One or two layers of nom 5/8 in. (16 mm) thick gypsum board as specified in the individual Wall and Partition Design. Max diam of opening is 5 in. (127 mm).

   The hourly F and FH Ratings of the firestop system are equal to the hourly fire rating of the wall assembly.
2. Through penetrants — One metallic pipe or conduit to be installed either concentrically or eccentrically within the firestop system. The annular space shall be 0 in. (point contact) to 1 in. (25 mm). Pipe or conduit to be rigidly supported on the penetrated side of the wall assembly. The following types and sizes of metallic pipes or conduits may be used:
   A. Steel pipe — Nom 3 in. (76 mm) diam (or smaller) Schedule 5 (or heavier) steel pipe.
   B. Conduit — Nom 3 in. (76 mm) diam (or smaller) steel electrical metallic tubing (EMT), nom 3 in. (76 mm) diam steel conduit or nom 1 in. (25 mm) diam (or smaller) flexible steel conduit.
   C. Copper Tubing — Nom 1 in. (25 mm) diam (or smaller) Type L (or heavier) copper tubing.
   D. Copper Pipe — Nom 1 in. (25 mm) diam (or smaller) Regular (or heavier) copper pipe.
3. Fill, Void or Cavity Material++— Sealant — Min 5/8 in. (16 mm) thickness of fill material applied within the annulus, flush with surface of wall. Min 1/2 in. (13 mm) diam bead of sealant applied at point contact location.

   HILTI CONSTRUCTION CHEMICALS, DIV OF HILTI INC — FS-ONE Sealant, FS-ONE MAX Intumescent Sealant, CFS-S-SIL GG Sealant, CP601S Elastomeric Sealant, CP 606 Sealant,or CP618 Putty.

++ Bearing the UL Classification Mark

Hilti Firestop Systems

Reproduced by HILTI, Inc. Courtesy of Underwriters Laboratories, Inc.
January 26, 2015

Classified by
Underwriters Laboratories, Inc.
to UL 1479

System No. C-AJ-2109

F Ratings — 2 and 3 Hr (See Item 3)
T Ratings — 0, 2 and 3 Hr (See Items 2 and 3)
W Rating - Class 1 (See Items 2, 3 and 4)
L Rating at Ambient — Less Than 1 CFM/sq ft (See Item 4)
L Rating at 400 F — Less Than 1 CFM/sq ft (See Item 4)

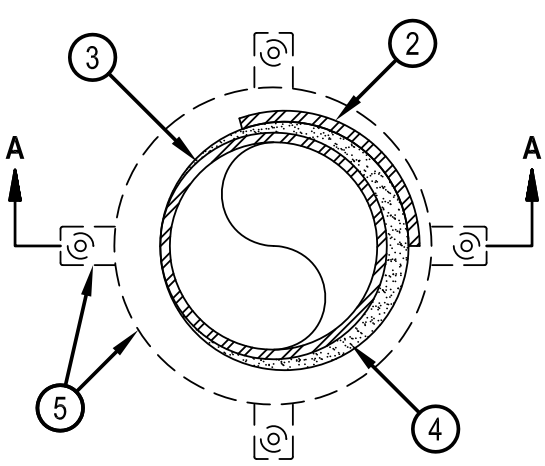

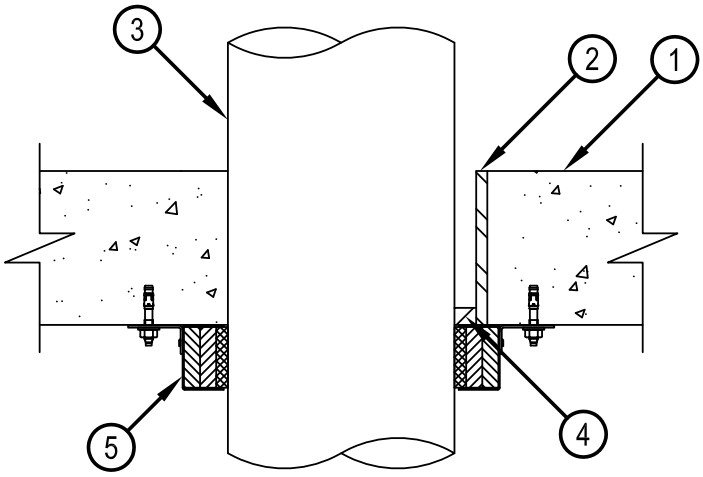

SECTION A-A

1. Floor or Wall Assembly — Min 4-1/2 in. (114 mm) thick reinforced lightweight or normal weight (100-150 pcf or 1600-2400 kg/m3) concrete. Wall may also be constructed of any UL Classified Concrete Blocks*. Max diam of opening is 12 in. (305 mm).
   See Concrete Blocks (CAZT) category in the Fire Resistance Directory for names of manufactures.
2. Steel Sleeve — (Optional) - Nom 12 in. (305 mm) diam (or smaller) Schedule 40 (or heavier) steel pipe cast or grouted into floor or wall assembly, flush with floor or wall surfaces a max of 3 in. (76 mm) above the floor. If the steel sleeve extends above the floor, the T Rating of the firestop system is 0 Hr and a min 1/2 in. (13 mm) annular space is required between the through penetrant (Item 3) and the periphery of the opening. The W Rating does not apply when the steel sleeve is used.
3. Through Penetrants — One nonmetallic pipe to be installed either concentrically or eccentrically within the firestop system. For max 6 in. (152 mm) diam pipes, the annular space between the pipe and the periphery of opening shall be min 0 in. (0 mm, point contact) to max 1/2 in. (13 mm). For nom 8 in. (203 mm) and 10 in. (254 mm) diam pipes, the annular space between the pipe and the periphery of opening shall be min 0 in. (0 mm, point contact) to max 1-1/4 in. (32 mm). If the steel sleeve extends above the floor (Item 2), a min 1/2 in. (13 mm) annular space is required between the through penetrant (Item 3) and the periphery of the opening. Pipe to be rigidly supported on both sides of floor or wall assembly. For systems with a W Rating, the max annular space is 1/2 in. (13 mm). The T Ratings are dependent on the size and/or type of pipe as shown in the table below. The following types and sizes of nonmetallic pipes may be used:
   A. Polyvinyl Chloride (PVC) Pipe — Nom 10 in. (254 mm) diam (or smaller) Schedule 40 solid core or cellular core PVC pipe for use in closed (process or supply) or vented (drain, waste or vent) piping systems. For systems with a W Rating, the nom diam of pipe shall not exceed 6 in. (152 mm).
   B. Chlorinated Polyvinyl Chloride (CPVC) Pipe — Nom 10 in. (254 mm) diam (or smaller) SDR13.5 CPVC pipe for use in closed (process or supply) piping systems. For systems with a W Rating, the nom diam of pipe shall not exceed 6 in. (152 mm).
   C. Acrylonitrile Butadiene Styrene (ABS) Pipe — Nom 6 in. (152 mm) diam (or smaller) Schedule 40 solid-core or cellular core ABS pipe for use in closed (process or supply) or vented (drain, waste or vent) piping system.
   D. Flame Retardant Polypropylene (FRPP) Pipe — Nom 6 in. (152 mm) diam (or smaller) Schedule 40 FRPP pipe for use in closed (process or supply) or vented (drain, waste or vent) piping systems.

Reproduced by HILTI, Inc. Courtesy of
Underwriters Laboratories, Inc.
January 27, 2015

Pipe Type	Nom Pipe Diam, In. (mm)	F Rating Hr
PVC, CPVC	Greater than 6 (152)	2
PVC, CPVC, ABS, FRPP	6 (152) or smaller	3
Pipe Type	**Nom Pipe Diam, In. (mm)**	**T Rating Hr**
PVC, CPVC, ABS, FRPP	1-1/2, 2, 3 (38, 51, 76)	2
PVC, CPVC, ABS, FRPP	4 (102)	3
PVC, CPVC, ABS+, FRPP	6 (152)	3
PVC, CPVC	Greater than 6 (152)	0
ABS++	6 (152)	0

+ - Indicates solid core ABS only.

++ - Indicates cellular core ABS only.

4. Fill, Void or Cavity Material* — Sealant — Min 1/2 in. (13 mm) thickness of fill material applied within the annulus, flush with top or bottom surface of floor or both surfaces of wall. Sealant is optional for pipes having a max diam of 6 in. (152 mm) in unsleeved openings. For systems with W Rating and/or L Rating, min 1/2 in. (13 mm) thickness of CP 601S, CFS-S SIL GG, CFS-S SIL SL (floors only) or CP 604 Sealant shall be applied within the annulus, flush with top or bottom surface of floor.
HILTI CONSTRUCTION CHEMICALS, DIV OF HILTI INC — FS-ONE Sealant, FS-ONE MAX Intumescent Sealant, CP 601S Sealant, CFS-S SIL GG, CFS-S SIL SL (floors only) or CP 604 Sealant

4A. Packing Material (not shown) — Min 1/2 in. (13 mm) thickness of 4 pcf (64 kg/m3) mineral wool batt insulation firmly packed into annular space and recessed from the top surface of floor to accommodate the required thickness of fill material. Required only when CP 604 Sealant is used.

5. Firestop Device* — Firestop Collar — Firestop collar shall be installed in accordance with the accompanying installation instructions. Collar to be installed and latched around the pipe and secured to underside of floor or both sides of wall using the anchor hooks provided with the collar. Minimum two anchor hooks for nom 1-1/2 and 2 in. (38 and 51 mm) diam pipes. Minimum three anchor hooks required for nom 3 and 4 in. (76 and 102 mm) diam pipes. Minimum four anchor hooks required for nom 6 in. (152 mm) diam pipes. Minimum ten anchor hooks required for nom 8 in (203 mm) diam pipes. Minimum twelve anchor hooks required for nom 10 in. (254 mm) diam pipes. The anchor hooks are to be secured with min 1/4 in. (6 mm) diam by min 1-1/4 in. (32 mm) long steel expansion bolts or min 0.145 in. (3.7 mm) diam by 1-1/4 in. (32 mm) long powder actuated fasteners utilizing a 1-7/16 in. (37 mm) diam by 1/16 in. (1.6 mm) thick steel washer. As alternates to the anchors specified above, Hilti 1/4 in. (6 mm) diam by 1-1/4 in. (32 mm) long KWIK-CON II+ concrete screw anchor, Hilti 1/4 in. (6 mm) diam by 1-3/4 in. (45 mm) long KWIK-BOLT 3 steel expansion anchor or Hilti X-DNI 27 P8 S15 powder actuated floor pin with integral nom 9/16 in. (15 mm) diam washer may be used.
HILTI CONSTRUCTION CHEMICALS, DIV OF HILTI INC — CP 643N 50/1.5", CP 643N 63/2", CP 643N 90/3", CP 643N 110/4", CP 643 160/6", CP 644 200/8" or CP 644 250/10" Firestop Collar

* Indicates such products shall bear the UL or cUL Certification Mark for jurisdictions employing the UL or cUL Certification (such as Canada), respectively

Classified by
Underwriters Laboratories, Inc.
to UL 1479

System No. C-AJ-2110

F Rating — 3 Hr
T Rating — 0 Hr
W Rating - Class 1 (See Items 2, 3 and 6)

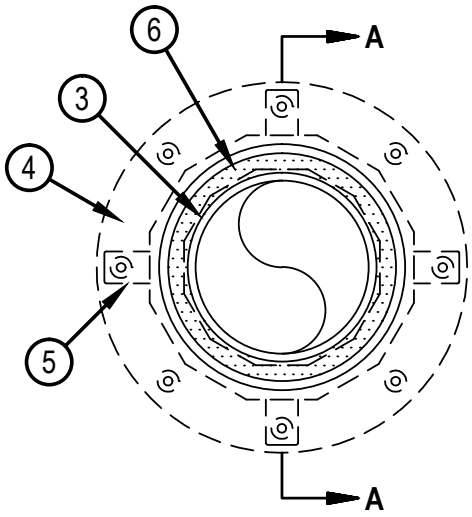

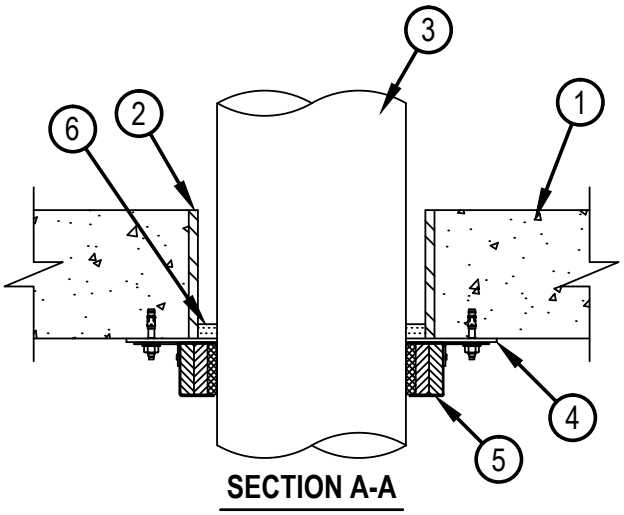

SECTION A-A

1. Floor or Wall Assembly — Min 4-1/2 in. (114 mm) thick reinforced lightweight or normal weight (100-150 pcf or 1600-2400 kg/m3) concrete. Wall may also be constructed of any UL Classified Concrete Blocks*. Floor may also be constructed of any min 6 in. (152 mm) thick UL Classified hollow core Precast Concrete Units*. Max diam of opening is 8 in. (203 mm). For hollow core Precast Concrete Unit floors, max diam of opening is 7 in. (178 mm).
   See Concrete Blocks (CAZT) and Precast Concrete Units (CFTV) categories in the Fire Resistance Directory for names of manufacturers.
2. Steel Sleeve — (Optional) Nom 8 in. (203 mm) diam (or smaller) Schedule 40 (or thinner) steel pipe cast or grouted into floor or wall assembly, flush with floor or wall surfaces. The W Rating does not apply when the steel sleeve is used.
3. Through Penetrants — One nonmetallic pipe to be installed either concentrically or eccentrically within the firestop system. The annular space between pipe and sleeve (Item 3) shall be min 1/4 in. (6 mm) to max 1-1/4 in. (32 mm). For systems with a W Rating, the max annular space is 1/2 in. (13 mm). Pipe to be rigidly supported on both sides of floor or wall assembly. The following types and sizes of nonmetallic pipes may be used:
   A. Polyvinyl Chloride (PVC) Pipe — Nom. 6 in. (152 mm) diam (or smaller) Schedule 40 solid-core or cellular core PVC pipe for use in closed (process or supply) or vented (drain, waste or vent) piping system.
   B. Chlorinated Polyvinyl Chloride(CPVC) Pipe — Nom 6 in. (152 mm) diam (or smaller) SDR17 CPVC pipe for use in closed (process or supply) or vented (drain, waste or vent) piping systems.
   C. Acrylonitrile Butadiene Styrene (ABS) Pipe — Nom 6 in. (152 mm) diam (or smaller) Schedule 40 solid-core or cellular core ABS pipe for use in closed (process or supply) or vented (drain, waste or vent) piping systems.
   D. Flame Retardant Polypropylene (FRPP) Pipe — Nom 6 in. (152 mm) diam (or smaller) Schedule 40 FRPP pipe for use in closed (process or supply) or vented (drain, waste or vent) piping systems.
4. Metal Cover Plate — Min 18 ga. steel with max I.D. 1/4 in. (6 mm) larger than O.D. of pipe. Min. O.D. of cover plate to be sized to provide min 1-1/2 in. (38 mm) overlap of plate to floor or wall around periphery of opening. Cover plate can be two pieces with a min 2 in. (51 mm) overlap at the seam. Installed between underside of floor or both sides of wall between collar and floor or wall surfaces. When packing material (Item 7) is used, min thickness of cover plate is 28 ga. Secure cover plate to underside of floor or both sides of wall with same fasteners as specified in Item 5 below such that max distance between fasteners around periphery of cover plate is 5 in. (127 mm). One fastener required at each seam location in plate.

Reproduced by HILTI, Inc. Courtesy of
Underwriters Laboratories, Inc.
January 09, 2015

System No. C-AJ-2110

5. Firestop Device* — Firestop Collar — Firestop collar shall be installed in accordance with the accompanying installation instructions. Collar to be installed and latched around the pipe and secured to underside of floor or both sides of wall floor using the anchor hooks provided with the collar. (Minimum 2 anchor hooks for 1-1/2 and 2 in. (38 and 51 mm) diam pipes, 3 anchor hooks for 3 and 4 in. (76 and 102 mm) diam pipes, and 4 anchor hooks for 6 in. (152 mm) diam pipes). The anchor hooks are to be secured with min 1/4 in. (6 mm) diam by min 1-1/4 in. (32 mm) long steel expansion bolts or min 0.145 in. (3.7 mm) diam by 1-1/4 in. (32 mm) long powder actuated fasteners utilizing a 1-7/16 in. (36 mm) diam by 1/16 in. (1.6 mm) thick steel washer. As alternates to the anchors specified above, Hilti 1/4 in. (6 mm) diam by 1-1/4 in. (32 mm) long KWIK-CON II+ concrete screw anchor, or Hilti 1/4 in. (6 mm) diam by 1-3/4 in. (44 mm) long KWIK-BOLT 3 steel expansion anchor or Hilti X-DNI 27 P8 S15 powder actuated floor pin with integral nom 9/16 in. (14 mm) diam washer may be used.
   HILTI CONSTRUCTION CHEMICALS, DIV OF HILTI INC — CP 643 50/1.5"N, CP 643 63/2"N. CP 643 90/3"N, CP 643 110/4"N or CP 643 160/6"N Firestop Collar.
6. Fill, Void or Cavity Material* — Sealant — Min 1/2 in. (13 mm) thickness of fill material applied within the annulus, flush with bottom surface of floor or both surfaces of wall assembly. Additionally, nom 1/4 in. (6 mm) beads of fill material applied between concrete and cover plate and between cover plate and firestop device. W Rating applies only when CP601S, CFS-S SIL GG, CFS-S SIL SL (floors only), Sealant is used. W Rating does not apply when hollow core precast concrete unit floors are used.
   HILTI CONSTRUCTION CHEMICALS, DIV OF HILTI INC — CP601S, CFS-S SIL GG, CFS-S SIL SL (floors only), CP606, FS-One Sealant or FS-ONE MAX Intumescent Sealant
7. Packing Material (Not Shown. Optional) — Min 2 in. (51 mm) thickness of min 4 pcf (64 kg/m3) mineral wool batt insulation firmly packed into opening as a permanent form. Packing material to be recessed from bottom surface of floor or both surfaces of wall to accommodate the required thickness of fill material (Item 6).

* Indicates such products shall bear the UL or cUL Certification Mark for jurisdictions employing the UL or cUL Certification (such as Canada), respectively.

Reproduced by HILTI, Inc. Courtesy of
Underwriters Laboratories, Inc.
January 09, 2015

Classified by
Underwriters Laboratories, Inc.
to UL 1479

System No. C-AJ-2217

F Rating - 2 Hr
T Rating - 0 Hr

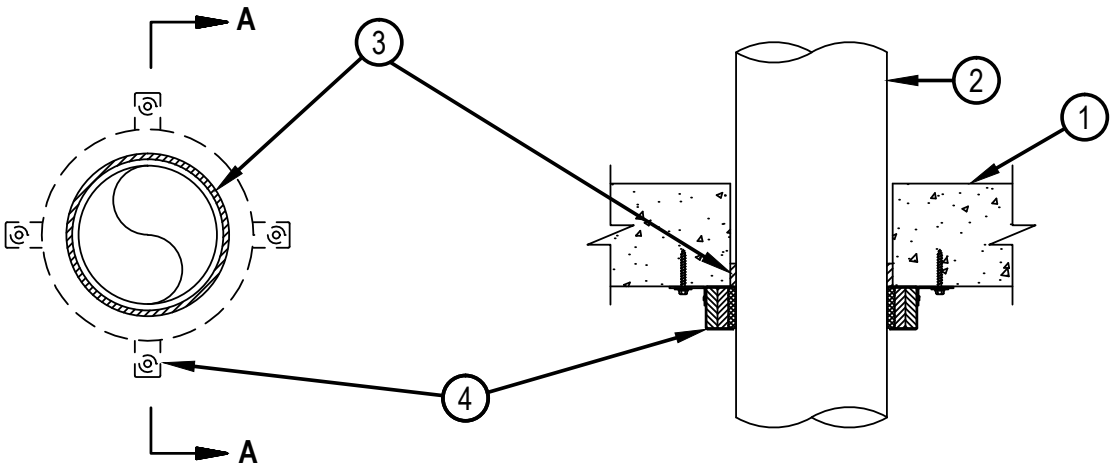

SECTION A-A

1. Floor or Wall Assembly — Min. 4-1/2 in. (114 mm) thick reinforced lightweight or normal weight (100-150 pcf or 1600-2400 kg/m3) concrete. Wall may also be constructed of any UL Classified Concrete Blocks. Max diam of opening is 7 in. (178 mm).
   See Concrete Blocks (CAZT) category in the Fire Resistance Directory for names of manufacturers.
2. Through Penetrants — One nonmetallic pipe to be installed within the firestop system. The annular space shall be min 0 in. to max 3/8 in. (9.5 mm). Pipe to be rigidly supported on both sides of floor or wall assembly. The following types and sizes of nonmetallic pipes may be used:
   A. Polyvinylidene Fluoride (PVDF) Pipe — Nom 6 in. (152 mm) diam (or smaller) SDR 32.5 PVDF pipe for use in closed (process or supply) or vented (drain, waste or vent) piping systems.
   B. Polypropylene (PP) Pipe — Nom 4 in. (102 mm) diameter (or smaller) schedule 40 PP for use in closed (process or supply) or vented (drain, waste or vent) piping systems.
3. Fill, Void or Cavity Material* — Sealant — Min 1 in. (25 mm) thickness of fill material applied within the annulus, flush with bottom surface of floor or with both surfaces of wall.
   HILTI CONSTRUCTION CHEMICALS, DIV OF HILTI INC — FS-ONE Sealant or FS-ONE MAX Intumescent Sealant
4. Firestop Device — Firestop collar shall be installed in accordance with the accompanying installation instructions. Collar to be installed and latched around the pipe and secured to underside of floor on both sides of wall using the anchor hooks provided with the collar. (Minimum two anchor hooks for 1-1/2 and 2 in. diam pipes, three anchor hooks for 3 and 4 in. (102 mm) diam pipes, six anchor hooks for 6 in. (152 mm) diam pipes.). The anchor hooks are to be secured with min 1/4 in. (6 mm) diam by min 1-1/4 in. (32 mm) long steel expansion bolts or min 0.145 in. (3.7 mm) diam by 1-1/4 in. (32 mm) long powder actuated fasteners utilizing a 1-7/16 in. (36.5 mm) diam by 1/16 in. (1.6 mm) thick steel washer. As alternates to the anchors specified above, Hilti 1/4 in. (6 mm) diam by 1-1/4 in. (32 mm) long KWIK-CON II+ concrete screw anchor, Hilti 1/4 in. (6 mm) diam by 1-3/4 in. (44 mm) long KWIK-BOLT 3 steel expansion anchor or Hilti X-DNI 27 P8 S15 powder actuated floor pin with integral nom 9/16 in. (14 mm) diam washer may be used.
   HILTI CONSTRUCTION CHEMICALS, DIV OF HILTI INC — CP 643 50/1.5"N, CP 643 63/2"N, CP 643 90/3"N, CP 643 110/4"N or CP643 160/6"N. Firestop Collar.

* Indicates such products shall bear the UL or cUL Certification Mark for jurisdictions employing the UL or cUL Certification (such as Canada), respectively.

Hilti Firestop Systems

Reproduced by HILTI, Inc. Courtesy of
Underwriters Laboratories, Inc.
January 09, 2015

Classified by
Underwriters Laboratories, Inc.
to UL 1479

System No. C-AJ-2337

F Rating — 3 Hr
T Rating — 0 Hr
W Rating - Class 1 (See Item 3B)

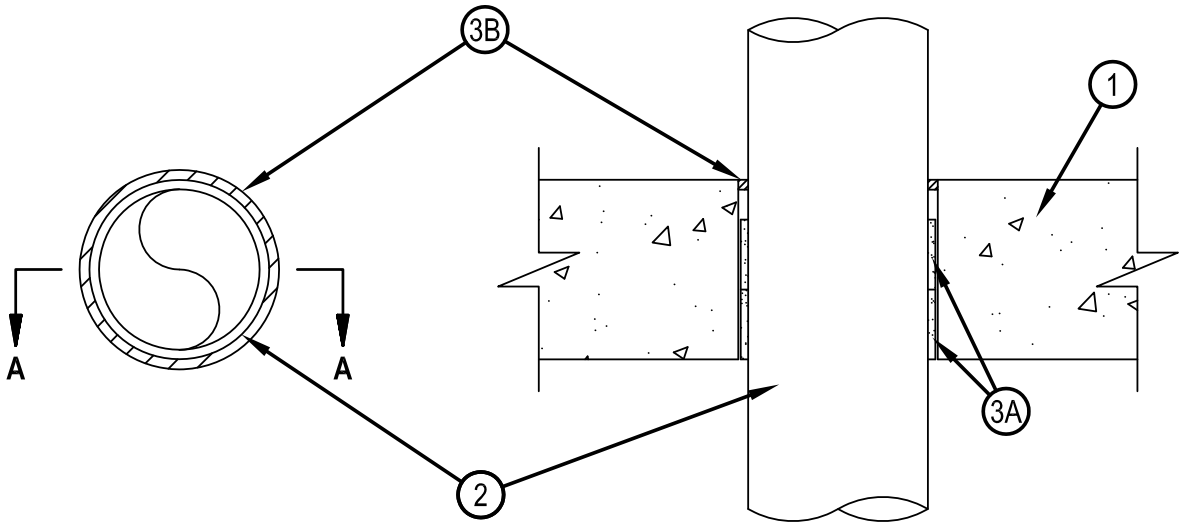

SECTION A-A

1. Floor or Wall Assembly — Min 4-1/2 in. (114 mm) thick reinforced lightweight or normal weight (100-150 pcf or 1600-2400 kg/m3) concrete or 5 in. (127 mm) thick reinforced lightweight or normal weight concrete wall. Wall may also be constructed of any UL Classified Concrete Blocks*. Max diameter of opening is 5 in. (127 mm).
   See Concrete Blocks (CAZT) category in the Fire Resistance Directory for names of manufactures.
2. Through Penetrants — One nonmetallic pipe to be installed either concentrically or eccentrically within the firestop system. Annular space between pipe and edge of opening shall be min 3/16 in. (5 mm) to a max 5/16 in. (8 mm). Pipe to be rigidly supported on both sides of floor or wall assembly. The following types and sizes of nonmetallic pipes may be used:
   A. Acrylonitrile Butadiene Styrene (ABS) Pipe — Nom 4 in. (102 mm) diam (or smaller) Schedule 40 solid or cellular core ABS pipe for use in closed (process or supply) or vented (drain, waste or vent) piping systems.
3. Firestop System — The firestop system shall consist of the following:
   A. Fill Void or Cavity Material* - Wrap Strip — Nom 3/16 in. (5 mm) thick by 1-3/4 in. (44 mm) wide intumescent wrap strip. Two layers of wrap strips individually wrapped around pipe with ends butted and held in place with tape. In floors, wrap strip butted side to side and slid into annular space with the lower edge flush with bottom surface of floor. In walls, one wrap strip inserted into annular space from each side of wall, and recessed 1/4 in. (6 mm).
   HILTI CONSTRUCTION CHEMICALS, DIV OF HILTI INC — "CP68-E W45/1-3/4" Wrap Strip
   B. Fill Void or Cavity Materials* - Sealant — Min 1/4 in. (6 mm) thickness of fill material applied within the annulus, flush with top surface of floor or both surfaces of wall. W Rating applies only when CP 601S, CFS-S SIL GG or CFS-S SIL SL (floors only) Sealant is used.
   HILTI CONSTRUCTION CHEMICALS, DIV OF HILTI INC — FS-ONE Sealant, FS-ONE MAX Intumescent Sealant, CFS-S SIL GG, CFS-S SIL SL (floors only) or CP 601S Sealant

* Indicates such products shall bear the UL or cUL Certification Mark for jurisdictions employing the UL or cUL Certification (such as Canada), respectively.

Hilti Firestop Systems

Reproduced by HILTI, Inc. Courtesy of
Underwriters Laboratories, Inc.
January 09, 2015

Classified by
Underwriters Laboratories, Inc.
to UL 1479

System No. C-AJ-2342

F Rating — 3 Hr
T Rating — 0 Hr
W Rating - Class 1 (See Item 3B)
L Rating at Ambient — Less Than 1 CFM/sq ft (See Item 3B)
L Rating at 400 F — Less Than 1 CFM/sq ft (See Item 3B)

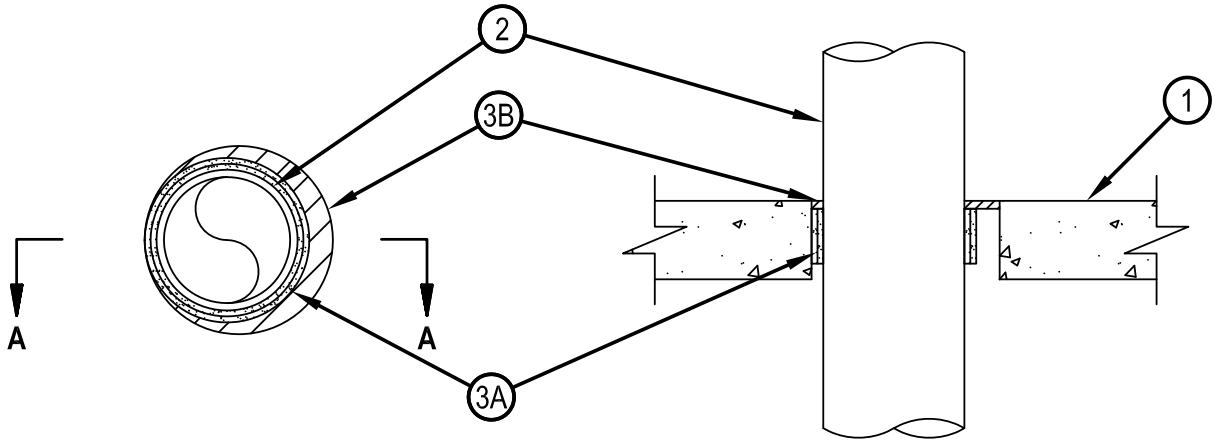

SECTION A-A

1. Floor or Wall Assembly — Min 2-1/2 in. (64 mm) thick reinforced lightweight or normal weight (100-150 pcf or 1600-2400 kg/m3) concrete floor or wall. Wall may also be constructed of any UL Classified Concrete Blocks*. Max diam of opening is 6 in. (152 mm).
   See Concrete Blocks (CAZT) category in the Fire Resistance Directory for names of manufacturers.
2. Through Penetrants — One nonmetallic pipe to be installed concentrically or eccentrically within the firestop system. Annular space within the firestop system is dependent upon the max diam and type of penetrant used as tabulated in Item 3A. Pipe to be rigidly supported on both sides of floor or wall assembly. The following types and sizes of nonmetallic pipes may be used:
   A. Polyvinyl Chloride (PVC) Pipe — Nom 4 in. (102 mm) diam (or smaller) Schedule 40 solid or cellular core PVC for use in closed (process or supply) or vented (drain, waste or vent) piping systems.
   B. Chlorinated Polyvinyl Chloride (CPVC) Pipe — Nom 4 in. (102 mm) diam (or smaller) SDR13.5 CPVC for use in closed (process or supply) piping systems.
   C. Acrylonitrile Butadiene Styrene (ABS) Pipe — Nom 4 in. (102 mm) diam (or smaller) Schedule 40 solid or cellular core ABS for use in closed (process or supply) or vented (drain, waste or vent) piping systems.
   D. Flame Retardant Polypropylene (FRPP) Pipe — Nom 4 in. (102 mm) diam (or smaller) Schedule 40 FRPP pipe for use in closed (process or supply) or vented (drain, waste or vent) piping system.
3. Firestop System — The firestop system shall consist of the following:
   A. Fill, Void or Cavity Material* — Wrap Strip — Layers of intumescent wrap strip are continuously wrapped around the pipe with ends held in place with tape. Wrap strip installed recessed max 1/4 in. (6 mm) from bottom surface of floor or from both surfaces of wall. Size of wrap strip and number of layers for a given size penetrant are shown in table below:
   HILTI CONSTRUCTION CHEMICALS, DIV OF HILTI INC — CP648-E W25/1" or CP648-E W45/1-3/4" Firestop Wrap Strip

Reproduced by HILTI, Inc. Courtesy of
Underwriters Laboratories, Inc.
January 09, 2015

System No. C-AJ-2342

Product Designation	Pipe Size in. (mm)	Max Opening Diam (in.)	Annular Space Min in.(mm)	Annular Space Max in. (mm)	Number of Layers	Nom Wrap Strip Width in. (mm)
CP648-E W25/1"	1 1/2 (38)	3 (76)	3/16 (4.8)	15/16 (24)	1	1 (25)
CP648-E W45/1-3/4"	1 1/2 (38)	3 (76)	3/16 (4.8)	15/16 (24)	1	1 3/4 (45)
CP648-E W25/1"	2 (51)	3 1/2 (89)	3/16 (4.8)	15/16 (24)	1	1 (25)
CP648-E W45/1-3/4"	2 (51)	3 1/2 (89)	3/16 (4.8)	15/16 (24)	1	1 3/4 (45)
CP648-E W45/1-3/4"	3 (76)	4 (102)	3/16 (4.8)	15/16 (24)	1	1 3/4 (45)
CP648-E W45/1-3/4"	3 (76)	5 (127)	3/8 (10)	1 1/16 (27)	2	1 3/4 (45)
CP648-E W45/1-3/4"	4 (102)	6 (152)	3/8 (10)	1 1/8 (29)	2	1 3/4 (45)

A1. Fill, Void or Cavity Material* — Wrap Strip — (As an alternate to the wrap strip in Item 3A) - One layer of intumescent wrap strip is continuously wrapped around the pipe with ends butted and held in place with integrated tape. Wrap strip installed recessed max 1/4 in. (6 mm) from top surface of floor or from both surfaces of wall. Size of wrap strip for a given size penetrant are shown in the table below.
HILTI CONSTRUCTION CHEMICALS, DIV OF HILTI INC — CP648-S-1.5" US, CP648-S-2" US, CP648-S-3" US or CP648-S-4" US Wrap Strip

Product Designation	Pipe Size in.(mm)	Max Opening Diam (in.)	Annular Space Min in. (mm)	Annular Space Max in. (mm)	Nom Wrap Strip Length in. (mm)	Nom Wrap Strip Thick in. (mm)	Nom Wrap Strip Width in. (mm)
CP648-S-1.5" US	1 1/2 (38)	3 (76)	3/16 (4.8)	15/16 (24)	6.5 (165)	0.18 (4.6)	1 (25)
CP648-S-2" US	2 (51)	3 1/2 (89)	3/16 (4.8)	15/16 (24)	8 (203)	0.18 (4.6)	1 (25)
CP648-S-3" US	3 (76)	4 (102)	3/16 (4.8)	5/16 (8)	11.5 (292)	0.18 (4.6)	1 3/4 (45)
CP648-S-4" US	4 (102)	6 (152)	3/8 (10)	1 1/8 (29)	15.1 (384)	0.36 (9)	1 3/4 (45)

B. Fill, Void or Cavity Material* - Sealant — Min 1/4 in. (6 mm) thickness of fill material applied within the annulus, flush with top surface of floor of both surfaces of wall. W Rating and/or L Rating applies only when CP 601S, CFS-S SIL GG, CFS-S SIL SL (floors only) or CP 604 sealant is used.
HILTI CONSTRUCTION CHEMICALS, DIV OF HILTI INC — FS-ONE Sealant, FS-ONE MAX Intumescent Sealant, CP 601S Sealant, CFS-S SIL GG, CFS-S SIL SL (floors only) or CP 604 Sealant

C. Packing Material (not shown) — Min 1/2 in. (13 mm) thickness of 4 pcf (64 kg/m3) mineral wool batt insulation firmly packed into annular space and recessed from the top surface of floor to accommodate the required thickness of fill material. Required only when CP 604 Sealant is used.

* Indicates such products shall bear the UL or cUL Certification Mark for jurisdictions employing the UL or cUL Certification (such as Canada), respectively.

Reproduced by HILTI, Inc. Courtesy of
Underwriters Laboratories, Inc.
January 09, 2015

Customer Hotline: Hong Kong 8228 8118, Macau 00800 8228 8118 Email: hksales@hilti.com

Classified by
Underwriters Laboratories, Inc.
to UL 1479

System No. C-AJ-2392

F Rating - 2 Hr
T Rating - 0 Hr

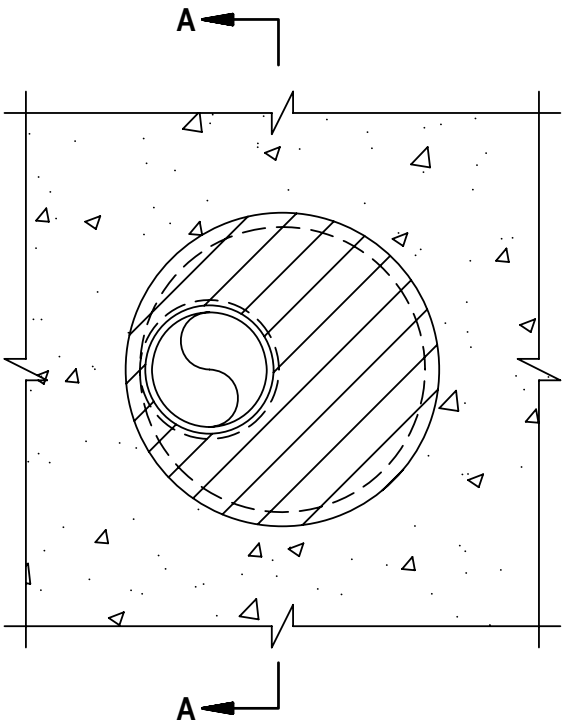

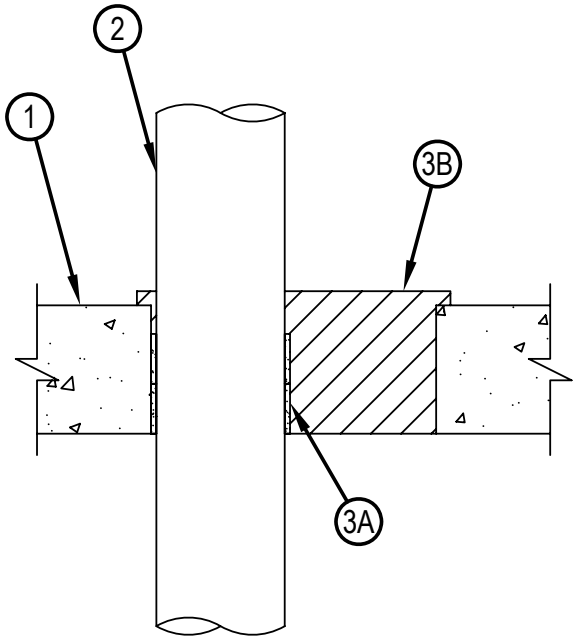

SECTION A-A

1. Floor or Wall Assembly -- Min 4-1/2 in. thick reinforced lightweight or normal weight (100-150 pcf) concrete. Wall may also be constructed of any UL Classified Concrete Blocks*. Max diam of opening is 10 in.
   See Concrete Blocks (CAZT) category in the Fire Resistance Directory for names of manufacturers.
2. Through Penetrants -- One non-metallic pipe to be installed eccentrically or concentrically within the opening with an annular space of min 3/16 in. to max 5-5/16 in. Pipe to be rigidly supported on both sides of floor or wall assembly. The following types and sizes of non-metallic pipe may be used:
   A. Polyvinyl Chloride (PVC) Pipe -- Nom 4 in. diam (or smaller) Schedule 40 solid or cellular core PVC pipe for used in closed (process or supply) or vented (drain, waste or vent) piping systems.
   B. Chlorinated Polyvinyl Chloride (CPVC) -- Nom 4 in. diam (or smaller) SDR13.5 CPVC pipe for used in closed (process or supply) piping systems.
3. Firestop System -- The firestop system shall consist of the following:
   A. Fill, Void or Cavity Material*-Wrap Strip -- Two stacks of wrap strips, each applied in a single wrap with ends tightly butted and held in place with tape, installed flush with bottom surface of floor or both surfaces of wall or extending 1/2 in. beyond both surfaces of wall.
   HILTI CONSTRUCTION CHEMICALS, DIV OF HILTI INC -- CP 648-E W45/1-3/4" Wrap Strip
   B. Fill Void or Cavity Materials* -- Foam -- Min 5 in. thickness of fill material applied within the annulus flush with bottom surface of floor and extending ½ in. above the top surface of the floor and overlapping the concrete ½ in on all sides of the opening. In walls, fill material installed extending ½ in. beyond both surfaces of wall and overlapping the concrete ½ in. on all sides of the opening.
   HILTI CONSTRUCTION CHEMICALS, DIV OF HILTI INC -- CP 620 Fire Foam

*Bearing the UL Classification Mark

Hilti Firestop Systems

Reproduced by HILTI, Inc. Courtesy of
Underwriters Laboratories, Inc.
April 27, 2005

Classified by
Underwriters Laboratories, Inc.
to UL 1479

System No. C-AJ-2407

F Rating — 2 Hr
T Rating — 0 Hr

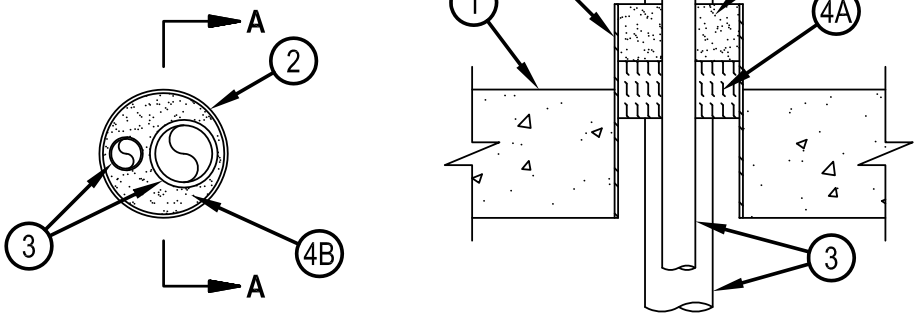

SECTION A-A

1. Floor or Wall Assembly — Min 4-1/2 in. (114 mm) thick reinforced lightweight or normal weight (100-150 pcf or 1600-2400 kg/m3) concrete floor or wall. Wall may also be constructed of any UL Classified Concrete Blocks*. Max diameter of opening is 4 in. (102 mm). See Concrete Blocks (CAZT) category in the Fire Resistance Directory for names of manufacturers.
2. Steel Sleeve- — (Optional) - Nom 4 in. (102 mm) diam (or smaller) Schedule 10 (or heavier) steel pipe cast or grouted into floor or wall. Sleeve to be flush with, or project max 3 in. (76 mm) from, top surface of floor or from both surfaces of wall.
3. Through Penetrants — One or more nonmetallic pipe, conduit or tubing to be installed within the opening. Annular space between the pipes, conduits or tubing and the periphery of the opening shall be min 1/4 in. (6 mm) to max 13/16 in. (21 mm) The annular space between pipes, conduits or tubings shall be nom 1/4 in. (6 mm) Pipes, conduits or tubings to be rigidly supported on both sides of floor or wall assembly. The following types and sizes of nonmetallic pipes may be used:
   A. Polyvinyl Chloride (PVC) Pipe — Nom 2 in. (51 mm) diam (or smaller) Schedule 40 solid or cellular core PVC for use in closed (process or supply) piping systems.
   B. Rigid Nonmetallic Conduit (RNC)+ — Nom 2 in. (51 mm) diam (or smaller) Schedule 40 PVC conduit installed in accordance with the National Electrical Code (NFPA No. 70).
   C. Chlorinated Polyvinyl Chloride (CPVC) Pipe — Nom 3 in. (76 mm) diam (or smaller) SDR13.5 CPVC for use in closed (process or supply) piping systems.
   D. Electrical Nonmetallic Tubing (ENT)+ — Nom 2 in. (51 mm) diam (or smaller) electrical nonmetallic tubing. Tubing to be installed in accordance with the National Electrical Code (NFPA No.70). See Electrical Nonmetallic Tubing (FKHU) category in the Electrical Construction Material Directory for names of manufacturers.
   E. Optical Fiber Raceway+ — Nom 1 in. (25 mm) diam (or smaller) optical fiber raceway formed from polyvinyl chloride (PVC). Raceway to be installed in accordance with the National Electrical Code (NFPA No.70). See Optical Fiber Raceway (QAZM) category in the Electrical Construction Material Directory for names of manufacturers.
   F. Cross Linked Polyethylene (PEX) Tubing — Nom 1 in. (25 mm) diam (or smaller) SDR 9 PEX tubing for use in closed (process or supply) piping systems.
4. Firestop System — The firestop system shall consist of the following:
   A. Packing Material — (Optional) —Mineral wool batt insulation firmly packed into the opening as a permanent form. Packing material to be recessed from top surface of floor or from both surfaces of wall as required to accommodate the required thickness of fill material.
   B. Fill, Void or Cavity Material* - Sealant — In floors, min 2 in. (51 mm) depth of fill material applied within the annulus flush with the top surface of floor or flush with the top of the steel sleeve. In walls, min 2 in. (51 mm) depth of fill material applied flush with both surfaces of wall or flush with both ends of steel sleeve.
   HILTI CONSTRUCTION CHEMICALS, DIV OF HILTI INC — FS-ONE Sealant or FS-ONE MAX Intumescent Sealant

* Indicates such products shall bear the UL or cUL Certification Mark for jurisdictions employing the UL or cUL Certification (such as Canada), respectively.
+Bearing the UL Listing Mark

Hilti Firestop Systems

Reproduced by HILTI, Inc. Courtesy of
Underwriters Laboratories, Inc.
January 09, 2015

Classified by
Underwriters Laboratories, Inc.
to UL 1479

System No. C-AJ-2419

F Rating - 3 Hr
T Rating - 0 Hr

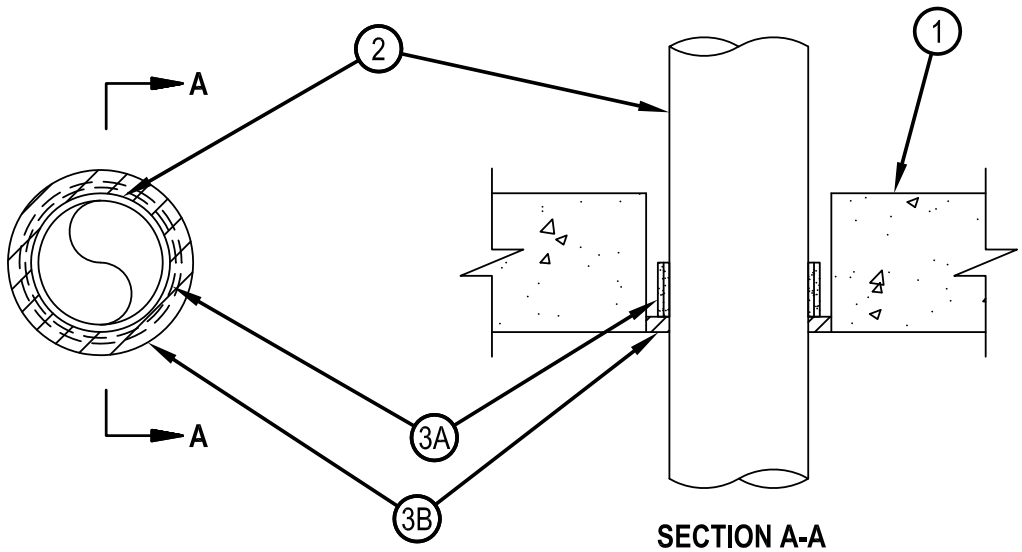

SECTION A-A

1. Floor or Wall Assembly — Min 4-1/2 in. (114 mm) thick reinforced lightweight or normal weight (100-150 pcf or 1600-2400 kg/m3) concrete floor or min 5 in. (127 mm) thick reinforced lightweight or normal weight (100-150 pcf or 1600-2400 kg/m3) concrete wall. Wall may also be constructed of any UL Classified Concrete Blocks*. Max diam of opening shall be 6 in. (152 mm).
   See Concrete Blocks (CAZT) category in the Fire Resistance Directory for names of manufacturers.
2. Through Penetrants — One nonmetallic penetrant centered within the firestop system. The annular space between pipe and periphery of opening shall be nom 3/4 in. (19 mm). Pipe to be rigidly supported on both sides of the floor assembly. The following types and sizes of non-metallic pipe may be used:
   A. Polyvinyl Chloride (PVC) Pipe — Nom 4 in. (102 mm) diam (or smaller) Schedule 40 solid core or cellular core PVC pipe for use in closed (process or supply) or vented (drain, waste or vent) piping systems.
   B. Chlorinated Polyvinyl Chloride (CPVC) Pipe — Nom 4 in. (102 mm) diam (or smaller) SDR 13.5 CPVC pipe for use in closed (process or supply) piping systems.
   C. Acrylonitrile Butadiene Styrene (ABS) Pipe — Nom 4 in. (102 mm) diam (or smaller) Schedule 40 solid core or cellular core ABS pipe for use in closed (process or supply) or vented (drain, waste or vent) piping systems.
3. Firestop System — The details of the firestop system shall be as follows:
   A. Fill, Void or Cavity Material* - Wrap Strip — Nom 3/16 in. (5 mm) thick by 1-3/4 in. (44 mm) wide intumescent wrap strip. The wrap strip is continuously wrapped around the outer circumference of the pipe covering two times and slid into the annular space. When multiple wrap strips are used to achieve the required total length, the ends are to be butted end to end and held in place with tape. The bottom edge of the wrap strip shall be recessed 1/2 in. (13 mm) from the bottom surface of the concrete floor. In walls, the wrap shall be installed on both surfaces of the wall such that the exposed edge of the wrap strip is recessed 1/2 in. (13 mm) from each side of the wall.
   HILTI CONSTRUCTION CHEMICALS, DIV OF HILTI INC — CP 648-E- W45/1-3/4" Wrap Strip
   B. Fill, Void or Cavity Materials* - Sealant — Min 1/2 in. (13 mm) thickness of fill material applied within the annulus, flush with bottom surface of floor or both surfaces of wall.
   HILTI CONSTRUCTION CHEMICALS, DIV OF HILTI INC — FS ONE Sealant or FS-ONE MAX Intumescent Sealant

* Indicates such products shall bear the UL or cUL Certification Mark for jurisdictions employing the UL or cUL Certification (such as Canada), respectively.

Hilti Firestop Systems

Reproduced by HILTI, Inc. Courtesy of
Underwriters Laboratories, Inc.
January 09, 2015

UL SYSTEM NO. W-J-2091

PLASTIC PIPE THORUGH CONCRETE WALL OR BLOCK WALL ASSEMBLY

F-RATING = 4-HR.
T-RATING = 2 AND 4-HR.

WJ2091d.062405

FRONT VIEW

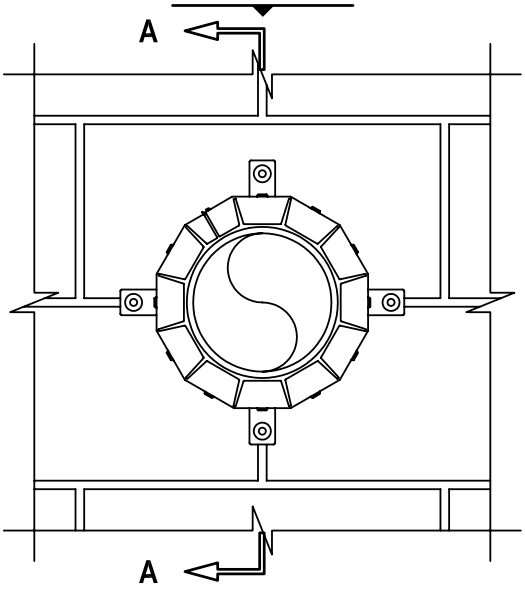

SECTION A-A

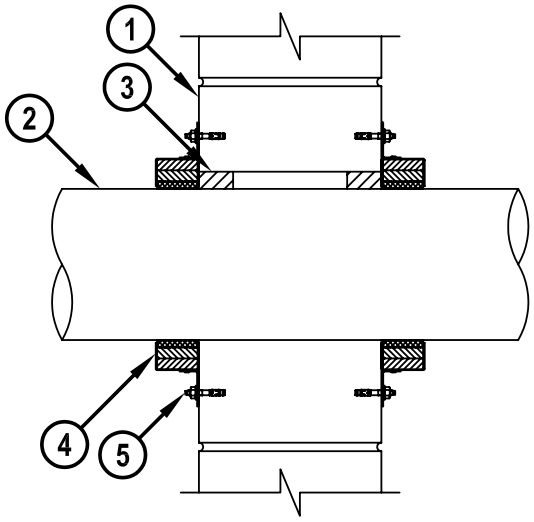

1. CONCRETE WALL ASSEMBLY (4-HR. FIRE-RATING) :
   A. LIGHTWEIGHT OR NORMAL WEIGHT CONCRETE WALL (MINIMUM 8-1/2" THICK).
   B. ANY UL CLASSIFIED CONCRETE BLOCK WALL.
2. PENETRATING ITEM TO BE ONE OF THE FOLLOWING (SEE NOTE NO. 2 BELOW) :
   A. MAXIMUM 6" NOMINAL DIAMETER PVC PLASTIC PIPE (CELLULAR OR SOLID CORE).
   B. MAXIMUM 6" NOMINAL DIAMETER CPVC PLASTIC PIPE (CLOSED PIPING SYSTEM ONLY).
3. MINIMUM 1-1/2" DEPTH HILTI FS-ONE INTUMESCENT FIRESTOP SEALANT.
4. HILTI CP 643N FIRESTOP COLLAR WITH FASTENING HOOKS (SEE TABLE BELOW).
5. EACH FASTENING HOOK SECURED TO BOTTOM OF FLOOR WITH 1/4" x 1-3/4" LONG STEEL EXPANSION BOLTS IN CONJUNCTION WITH 3/4" DIAMETER STEEL WASHERS (EX. HILTI KWIK-BOLT 3).

NOMINAL PIPE DIAMETER	PRODUCT DESCRIPTION	ANNULAR SPACE		T-RATING
		MINIMUM	MAXIMUM	
1-1/2"	CP 643 50/1.5" N	0"	1/2"	4
2"	CP 643 63/2" N	0"	1/2"	4
3"	CP 643 90/3" N	0"	1/2"	4
4"	CP 643 110/4" N	0"	1/2"	4
6"	CP 643 160/6" N	0"	3/4"	2

NOTES : 1. MAXIMUM DIAMETER OF OPENING = 7-3/8".
2. CLOSED OR VENTED PIPING SYSTEM (PVC = SCHEDULE 40; CPVC = SDR 13.5).

HILTI®
FIRESTOP SYSTEMS

HILTI, Inc.
Tulsa, Oklahoma USA (918) 252-6000

Sheet	1 of 1
Scale	1/8" = 1"
Date	June 24, 2005

Drawing No.
WJ 2091d

Saving Lives through Innovation and Education

Classified by
Underwriters Laboratories, Inc.
to UL 1479

System No. W-J-2205

F Ratings - 1 and 2 Hr (See Item 3B)
T Rating - 0 Hr
L Rating At Ambient - 1.2 CFM/sq ft (See Item 3B)
L Rating At 400 F - Less Than 1 CFM/sq ft (See Item 3B)

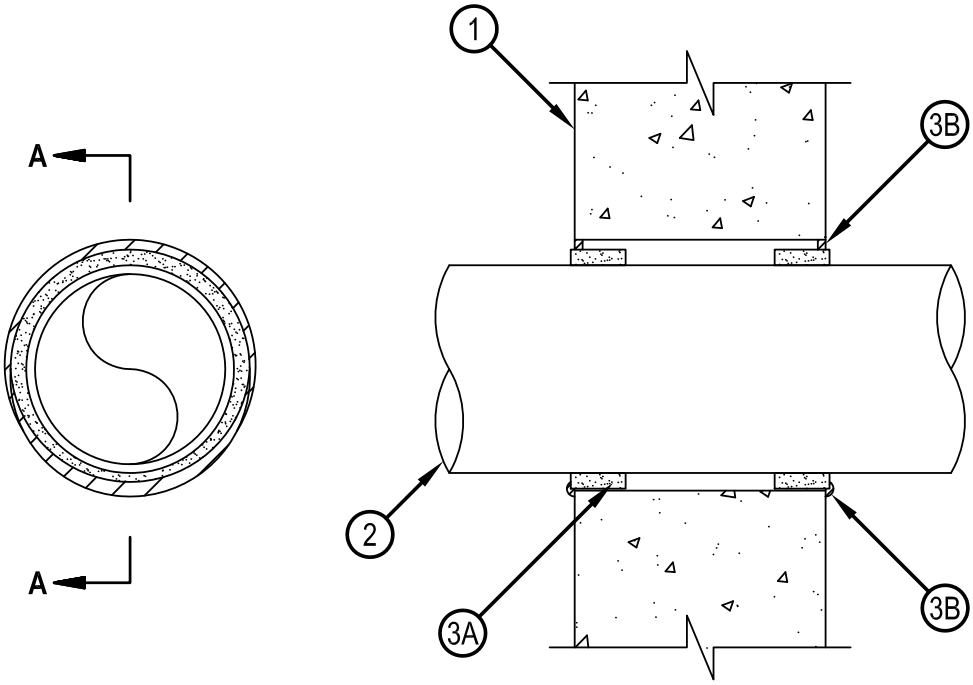

SECTION A-A

1. Wall Assembly — Min 6 in. (152 mm) thick reinforced lightweight or normal weight (100-150 pcf or 1600-2400 kg/m3) concrete. Wall may also be constructed of any UL Classified Concrete Blocks*. See Table under Item 3B for max diam of opening.
   See Concrete Blocks (CAZT) category in the Fire Resistance Directory for names of manufacturers.
2. Through-Penetrants — One nonmetallic pipe installed within the firestop system. See Table under Item 3B for annular space required in the firestop system. Pipe to be rigidly supported on both sides of wall assembly. The following types and sizes of nonmetallic pipes may be used:
   A. Polyvinyl Chloride (PVC) Pipe — Nom 6 in. (152 mm) diam (or smaller) Schedule 40 cellular or solid core PVC pipe for use in closed (process or supply) or vented (drain, waste or vent) piping system.
   B. Chlorinated Polyvinyl Chloride (CPVC) Pipe — Nom 6 in. (152 mm) diam (or smaller) SDR 13.5 CPVC pipe for use in closed (process or supply) piping system.
   C. Acrylonitrile Butadiene Styrene (ABS) Pipe — Nom 4 in. (102 mm) diam (or smaller) Schedule 40 cellular or solid core ABS pipe for use in closed (process or supply) or vented (drain, waste or vent) piping system.

Reproduced by HILTI, Inc. Courtesy of
Underwriters Laboratories, Inc.
January 22, 2015

System No. W-J-2205

3. Firestop System — The firestop system shall consist of the following:

A. Fill, Void or Cavity Material* — Wrap Strip — See Table under Item 3B for min size of intumescent wrap strip. The wrap strip is continuously wrapped around the outer circumference of the pipe once and slid into the annular space such that approx 1/8 in. (3 mm) of the wrap strip protrudes from the wall surface. Wrap strip is held in place with integral fastening tape. Wrap strip installed on each surface of wall.

HILTI CONSTRUCTION CHEMICALS, DIV OF HILTI INC — CP 648S - 1.5" US, CP 648S - 2" US, CP 648S - 3" US, CP 648S - 4" US and CP 648S - 6" US

B. Fill, Void or Cavity Material* — Caulk — Min 1/4 in. (6 mm) thickness of fill material applied within the annulus, flush with both surfaces of wall. For 2 hr fire-rated walls, 1/4 in. (6 mm) bead fill material also applied at wrap strip/wall interface. In 1 hr fire-rated walls, fill material is optional for nom 1-1/2, 2, 3 and 4 in. (38, 51, 76 and 102 mm) diam penetrants. In 2 hr fire-rated walls, fill material is optional for nom 1-1/2, 2 and 3 in. (38, 51 and 76 mm) diam penetrants. Fill material is required to be used to attain L Ratings.

HILTI CONSTRUCTION CHEMICALS, DIV OF HILTI INC — FS-One Sealant or FS-ONE MAX Intumescent Sealant.

Nom Pipe Diam, in. (mm)	Wrap Strip	Wrap Strip Size, thick. x width, in. (mm)	Max Diam of Opening,in. (mm)	Annular Space, in. (mm)	
				Min.	Max.
1-1/2 (38)	CP 648S - 1.5" US	3/16 x 1 (5 x 25)	2-3/8 (60)	3/16 (5)	5/16 (8)
2 (51)	CP 648S - 2" US	3/16 x 1 (5 x 25)	3 (76)	3/16 (5)	5/16 (8)
3 (76)	CP 648S - 3" US	3/16 x 1-3/4 (5 x 44)	4 (102)	3/16 (5)	5/16 (8)
4 (102)	CP 648S - 4" US	3/8 x 1-3/4 (10 x 44)	5-3/8 (137)	3/8 (10)	1/2 (13)
6 (152)	CP 648S - 6" US	1/2 x 1-3/4 (13 x 44)	8 (203)	9/16 (14)	13/16 (21)

* Indicates such products shall bear the UL or cUL Certification Mark for jurisdictions employing the UL or cUL Certification (such as Canada), respectively.

Reproduced by HILTI, Inc. Courtesy of
Underwriters Laboratories, Inc.
January 22, 2015

Customer Hotline: Hong Kong 8228 8118, Macau 00800 8228 8118 Email: hksales@hilti.com

Classified by
Underwriters Laboratories, Inc.
to UL 1479

System No. W-L-2078

F Ratings — 1 and 2 Hr (See Item 1)
T Ratings — 0, 1 and 2 Hr (See Items 2 and 3)
L Rating At Ambient — 3 CFM/sq ft
L Rating At 400 F — Less Than 1 CFM/sq ft

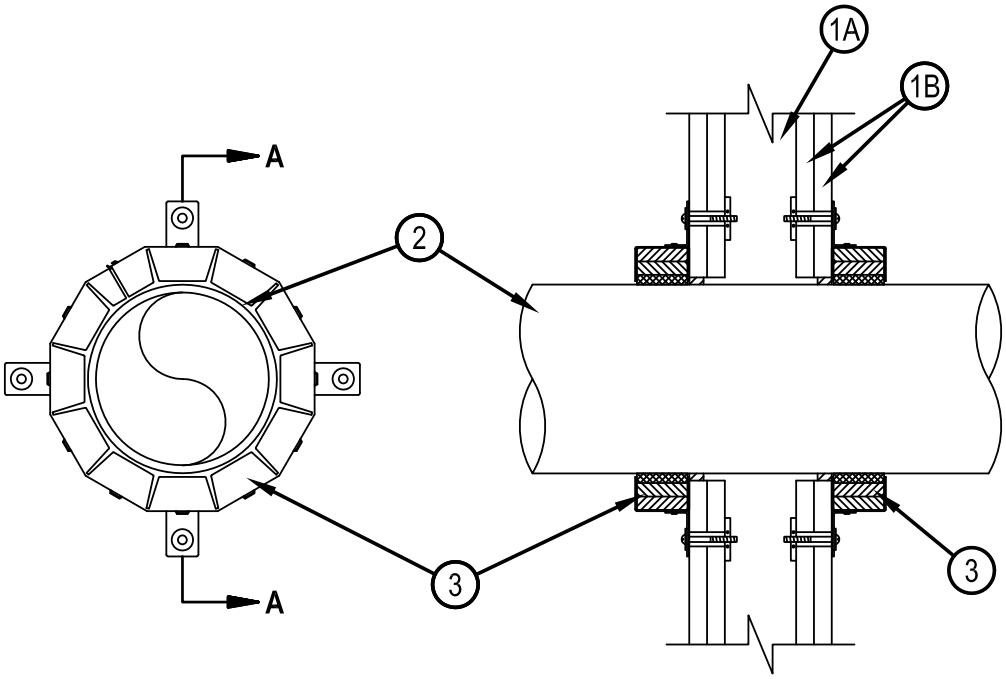

SECTION A-A

1. Wall Assembly — The fire-rated gypsum board/stud wall assembly shall be constructed of the materials and in the manner specified in the individual U300, U400, V400 or W400 Series Wall and Partition Designs in the UL fire Resistance Directory and shall include the construction features noted below:
   A. Studs — Wall framing may consist of either wood studs or steel channel studs. Wood studs to consist of nom 2 by 4 in. (51 by 102 mm) lumber spaced max 16 in. (406 mm) OC. Steel studs to be min 2-1/2 in. (64 mm) wide and spaced max 24 in. (610 mm) OC.
   B. Gypsum Board* — Nom 5/8 in. (16 mm) thick gypsum board, as specified in the individual Wall and Partition Design. Max diam of opening is 11-1/2 in. (292 mm).
   The hourly F Rating of the firestop system is equal to the hourly fire rating of the wall assembly in which it is installed.
2. Through-Penetrants — One nonmetallic pipe, conduit or tubing to be installed within the firestop system. The annular space between pipe and periphery of opening shall be min 0 in. (point contact) to max 1/2 in. (13 mm). Pipe or conduit to be rigidly supported on both sides of the wall assembly. The following types and sizes of nonmetallic pipes may be used:
   A. Polyvinyl Chloride (PVC) Pipe — Nom 10 in. (254 mm) diam (or smaller) Schedule 40 solid-core or cellular core PVC pipe for use in closed (process or supply) or vented (drain, waste or vent) piping system.
   B. Chlorinated Polyvinyl Chloride (CPVC) Pipe — Nom 10 in. (254 mm) diam (or smaller) SDR13.5 CPVC pipe for use in closed (process or supply) piping systems.
   C. Acrylonitrile Butadiene Styrene (ABS) Pipe — Nom 6 in. (152 mm) diam (or smaller) Schedule 40 solid-core or cellular core ABS pipe for use in closed (process or supply) or vented (drain, waste or vent) piping systems
   D. Flame Retardant Polypropylene (FRPP) Pipe — Nom 6 in. (152 mm) diam (or smaller) Schedule 40 FRPP pipe for use in closed (process or supply) or vented (drain, waste or vent) piping system.
   E. Polyvinylidene Fluoride (PVDF) Pipe — Nom 4 in. (102 mm) diam (or smaller) PVDF pipe for use in closed (process or supply) or vented (drain, waste or vent) piping system.
   When max 6 in. diam pipe is used, T Rating is equal to the hourly fire rating of the wall. When nom 8 in. or 10 in. (203 or 254 mm) diam pipe is used, T Rating is 0 hr.

Reproduced by HILTI, Inc. Courtesy of
Underwriters Laboratories, Inc.
January 28, 2015

System No. W-L-2078

3. Firestop Device* — Firestop Collar — Firestop collar shall be installed in accordance with the accompanying installation instructions. Collar to be installed and latched around the pipe and secured to both sides of the wall using the anchor hooks provided with the collar. (Minimum two anchor hooks for 1-1/2 and 2 in. (38 and 51 mm) diam pipes, three anchor hooks for 3 and 4 in. (76 and 102 mm) diam pipes, four anchor hooks for 6 in. (152 mm) diam pipes, ten anchor hooks for 8 in. (203 mm) diam pipes and twelve anchor hooks for 10 in. (254 mm) diam pipes. The anchor hooks are to be secured to the surface of wall with 3/16 in. (4.8 mm) diam by 2-1/2 in. (64 mm) long steel toggle bolts along with washers. As an alternate for pipe sizes of nom 4 in. diam or less, min No. 10 by 1-1/2 in. (254 by 38 mm) long drywall or laminate screws with min 3/4 in. (19 mm) steel washers may be used. When the drywall or laminate screw is used, T Rating shall not exceed 1 hr.
   HILTI CONSTRUCTION CHEMICALS, DIV OF HILTI INC — CP 643 50/1.5"N, CP 643 63/2"N, CP 643 90/3"N, CP 643 110/4"N, CP 643 160/6"N, CP 644 200/8" andCP 644 250/10" Firestop Collars
4. Fill, Void or Cavity Material* — Sealant - (Not Shown) — Min 1/2 in. (13 mm) thickness of sealant applied within the annular space for nom 8 in. and 10 in. (203 and 254 mm) diam pipes, flush with each side of wall. Sealant in annular space is optional for max 6 in. (152 mm) diam pipes. A min 1/4 in. (6 mm) thickness of sealant is required within the annular space, flush with each side of wall, to attain the L Ratings for max 6 in. (152 mm) diam pipes.
   HILTI CONSTRUCTION CHEMICALS, DIV OF HILTI INC — FS-One Sealant or FS-ONE MAX Intumescent Sealant

* Indicates such products shall bear the UL or cUL Certification Mark for jurisdictions employing the UL or cUL Certification (such as Canada), respectively.

Reproduced by HILTI, Inc. Courtesy of
Underwriters Laboratories, Inc.
January 28, 2015

Underwriters Laboratories, Inc.
to UL 1479

System No. W-L-2245

F Rating — 4 Hr
T Rating — 2 and 4 Hr (See Item 2)

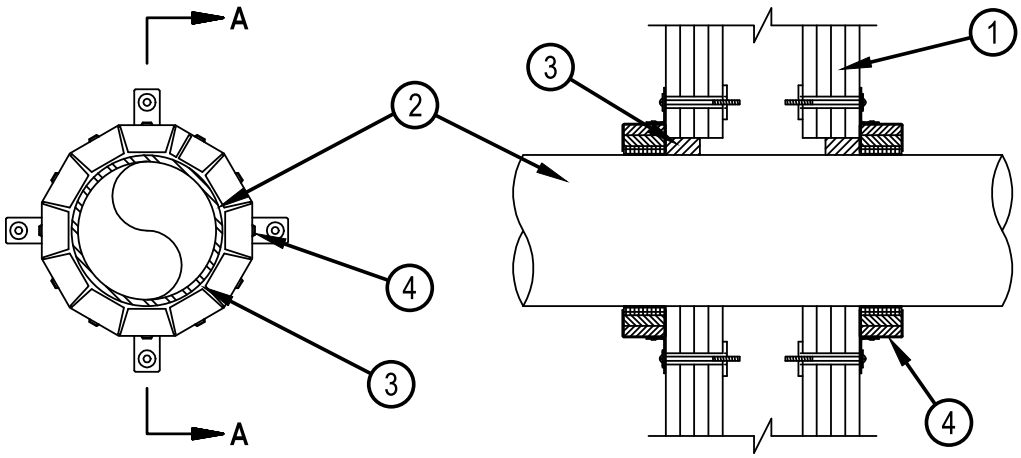

SECTION A-A

1. Floor or Wall Assembly — Min 4 hr fire-rated gypsum board/stud wall assembly shall be constructed of the materials and in the manner described in the individual U400, V400 or W400 Series Wall or Partition Design in the UL Fire Resistance Directory and shall include the following construction features:
   A. Studs — Wall framing shall consist of steel channel studs. Steel studs to be min 3-1/2 in. (89 mm) wide and spaced max 24 in. (610 mm) OC.
   B. Gypsum Board* — Four layers of nom 5/8 in. (16 mm) thick, gypsum board as specified in the individual wall and partition Design. Max diam of opening is 7-3/8 in. (187 mm).
2. Through-Penetrants — One nonmetallic pipe to be installed concentrically or eccentrically within the firestop system. The annular space between the pipe and the periphery of the opening shall be a min 0 in. (point contact) to max 3/4 in. (19 mm) for nom 6 in. (152 mm) diameter pipes and min 0 in (point contact) to max 1/2 in. (13 mm) for nom 4 in. (102 mm) diam (or smaller) pipes. Pipe to be rigidly supported on both sides of wall assembly. The following types and sizes of nonmetallic pipes may be used.
   A. Polyvinyl Chloride (PVC) Pipe — Nom 6 in. (152 mm) diam (or smaller) Schedule 40 solid or cellular PVC core pipe, for use in closed (process or supply) or vented (drain, waste or vent) piping systems.
   B. Chlorinated Polyvinyl Chloride (CPVC) Pipe — Nom 6 in. (152 mm) diam (or smaller) SDR 13.5 CPVC pipe. For use in closed (process or supply) piping systems.
   The T Rating is dependent upon the diam of pipe used in the firestop system. For nom 4 in. diam (or smaller) pipes, the T Rating is 4 hr. For pipes greater than nom 4 in. diam the T Rating is 2 hr.
3. Firestop System — The firestop system shall consist of the following:
   A. Fill, Void or Cavity Material - Sealant* — Min 1-1/2 in. (38 mm) thickness of fill material applied within annulus of gypsum board, flush with surface of wall.
   HILTI CONSTRUCTION CHEMICALS, DIV OF HILTI INC FS-ONE Sealant or FS-ONE MAX Intumescent Sealant
   B. Firestop Device - Firestop Collar — The firestop collar shall be installed in accordance with the accompanying installation instructions. The collar shall be installed and latched around the pipe and secured to the gypsum board with the anchor hooks provided with the collar. (Min 2 anchor hooks for 1-1/2 and 2 in. (38 and 51 mm) diam pipes, 3 anchor hooks for 3 and 4 in. (76 and 102 mm) diam pipes and 6 anchor hooks for 6 in. (152 mm) diam pipes). The anchor hooks are to be secured to the wall with 1/4 in. (6 mm) by 3 in. (76 mm) toggle bolts along with min 3/4 in. (19 mm) diam steel washers.
   HILTI CONSTRUCTION CHEMICALS, DIV OF HILTI INC — CP 643 50/1.5"N, CP 643 63/2"N, CP 643 90/3"N, CP 643 110/4"N or CP 643 160/6"N Firestop Collar

* Indicates such products shall bear the UL or cUL Certification Mark for jurisdictions employing the UL or cUL Certification (such as Canada), respectively.

Hilti Firestop Systems

Reproduced by HILTI, Inc. Courtesy of
Underwriters Laboratories, Inc.
January 22, 2015

Classified by
Underwriters Laboratories, Inc.
to UL 1479

System No. W-L-2406

F Ratings — 1 and 2 Hr (See Item 1)
T Ratings — 0, 1/2 and 3/4 Hr (See Item 2)
L Rating At Ambient - 1.2 CFM/sq ft (See Item 3B)
L Rating At 400 F - Less Than 1 CFM/sq ft (See Item 3B)

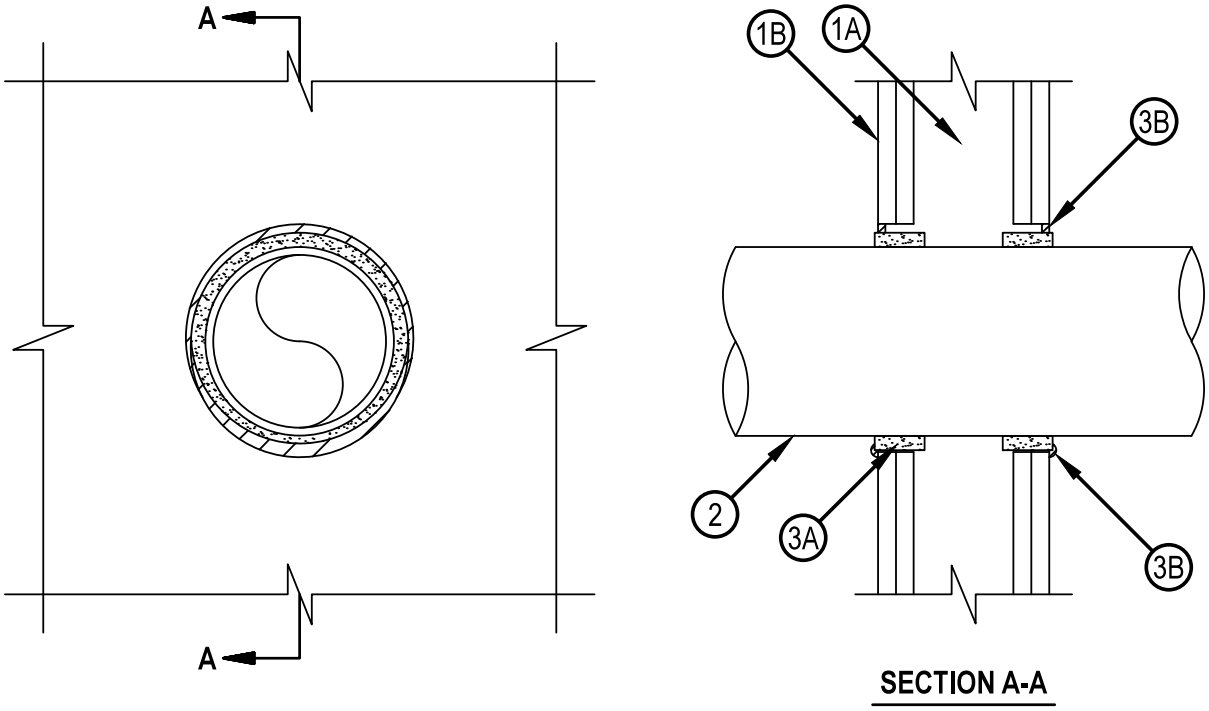

SECTION A-A

1. Wall Assembly — The 1 or 2 hr fire-rated gypsum board/stud wall assembly shall be constructed of the materials and in the manner specified in the individual U300, U400, V400 or W400 Series Wall and Partition Designs in the UL Fire Resistance Directory and shall include the following construction features:
   A. Studs — Wall framing may consist of either wood studs or steel channel studs. Wood studs to consist of nom 2 by 4 in. (51 by 102 mm) lumber spaced 16 in. (406 mm) OC. Steel studs to be min 3-1/2 in. (89 mm) wide and spaced max 24 in. (610 mm) OC.
   B. Gypsum Board* — One or two layers of nom 5/8 in. (16 mm) thick gypsum board, as specified in the individual Wall and Partition Design. See Table under Item 3B for max diam of opening.
2. Through-Penetrants — One nonmetallic pipe installed within the firestop system. See Table under Item 3B for annular space required in the firestop system. Pipe to be rigidly supported on both sides of wall assembly. The following types and sizes of nonmetallic pipes may be used:
   A. Polyvinyl Chloride (PVC) Pipe — Nom 6 in. (152 mm) diam (or smaller) Schedule 40 cellular or solid core PVC pipe for use in closed (process or supply) or vented (drain, waste or vent) piping system.
   B. Chlorinated Polyvinyl Chloride (CPVC) Pipe — Nom 6 in. (152 mm) diam (or smaller) SDR 13.5 CPVC pipe for use in closed (process or supply) piping system.
   C. Acrylonitrile Butadiene Styrene (ABS) Pipe — Nom 4 in. (102 mm) diam (or smaller) Schedule 40 cellular or solid core ABS pipe for use in closed (process or supply) or vented (drain, waste or vent) piping system.

The T Rating for 2 hr fire-rated walls is 0 hr. The T Rating for 1 hr fire-rated walls is 3/4 hr for nom 1-1/2, 2 and 3 in. (38, 51 and 76 mm) diam through penetrants. The T Rating for 1 hr fire-rated walls is 1/2 hr for nom 4 and 6 in. (102 and 152 mm) diam through penetrants.

Reproduced by HILTI, Inc. Courtesy of
Underwriters Laboratories, Inc.
January 26, 2015

Classified by
Underwriters Laboratories, Inc.
to UL 1479

System No. W-L-2406

3. Firestop System — The firestop system shall consist of the following:

A. Fill, Void or Cavity Material* — Wrap Strip — See Table under Item 3B for min size of intumescent wrap strip. The wrap strip is continuously wrapped around the outer circumference of the pipe once and slid into the annular space such that approx 1/8 in. (3 mm) of the wrap strip protrudes from the wall surface. Wrap strip is held in place with integral fastening tape. Wrap strip installed on each surface of wall.
HILTI CONSTRUCTION CHEMICALS, DIV OF HILTI INC — CP 648S - 1.5" US, CP 648S - 2" US, CP 648S - 3" US, CP 648S - 4" US and CP 648S - 6" US

B. Fill, Void or Cavity Material* — Caulk — Min 1/4 in. (6 mm) thickness of fill material applied within the annulus, flush with both surfaces of wall. For 2 hr fire-rated walls, 1/4 in. (6 mm) bead fill material also applied at wrap strip/gypsum wall interface. In 1 hr fire-rated walls, fill material is optional for nom 1-1/2, 2, 3 and 4 in. (38, 51, 76 and 102 mm) diam penetrants. In 2 hr fire-rated walls, fill material is optional for nom 1-1/2, 2 and 3 in. (38, 51 and 76 mm) diam penetrants. Fill material is required to be used to attain L Ratings.
HILTI CONSTRUCTION CHEMICALS, DIV OF HILTI INC — FS-One Sealant or FS-ONE MAX Intumescent Sealant

Nom Pipe Diam, in. (mm)	Wrap Strip	Wrap Strip Size, thick. X width, in. (mm)	Max Diam of Opening, in. (mm)	Annular Space, in. (mm)	
				Min	Max
1-1/2 (38)	CP 648S - 1.5" US	3/16 x 1 (5 x 25)	2-3/8 (60)	3/16 (5)	5/16 (8)
2 (51)	CP 648S - 2" US	3/16 x 1 (5 x 25)	3 (76)	3/16 (5)	5/16 (8)
3 (76)	CP 648S - 3" US	3/16 x 1-3/4 (5 x 44)	4 (102)	3/16 (5)	5/16 (8)
4 (102)	CP 648S - 4" US	3/8 x 1-3/4 (10 x 44)	5-3/8 (137)	3/8 (10)	1/2 (13)
6 (152)	CP 648S - 6" US	1/2 x 1-3/4 (13 x 44)	8 (203)	9/16 (14)	13/16 (21)

* Indicates such products shall bear the UL or cUL Certification Mark for jurisdictions employing the UL or cUL Certification (such as Canada), respectively.

Reproduced by HILTI, Inc. Courtesy of
Underwriters Laboratories, Inc.
January 26, 2015

Classified by
Underwriters Laboratories, Inc.
to UL 1479

System No. W-L-2411

F Ratings - 1 and 2 Hr (See Item 1)
T Ratings - 0 and 1-1/2 Hr (See Item 1)

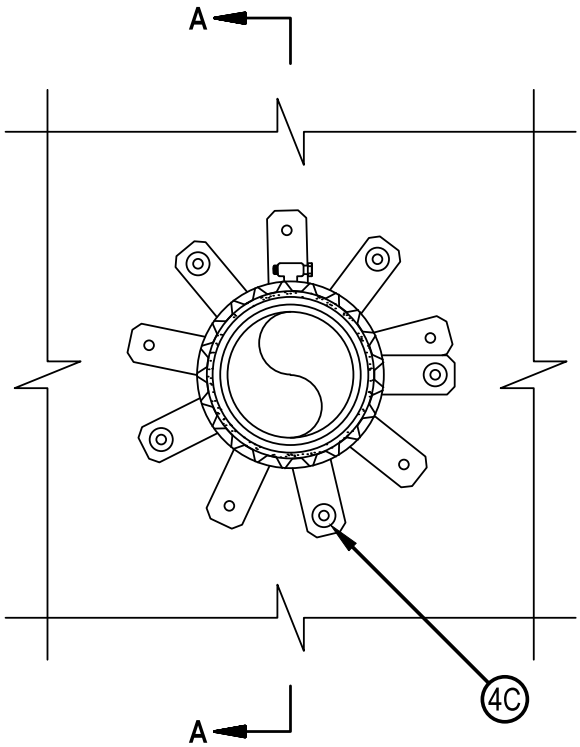

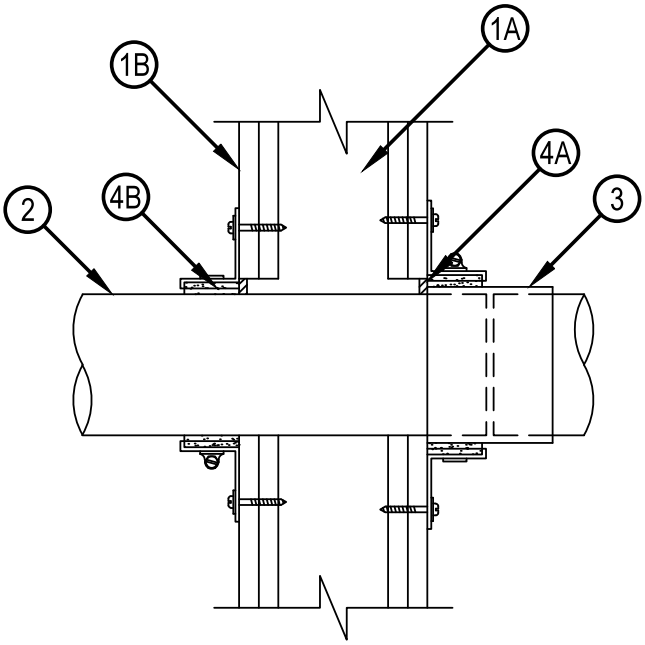

SECTION A-A

1. Wall Assembly — The 1 or 2 hr fire-rated gypsum board/stud wall assembly shall be constructed of the materials and in the manner specified if the individual U300, U400, V400 or W400 Series Wall and Partition Designs in the Fire Resistance Directory and shall include the following construction features:
   A. Studs — Wall framing shall consist of either wood studs or channel shaped steel studs. Wood studs to consist of 2 by 4 in. (51 by 102 mm) lumber spaced 16 in. (406 mm) OC. Steel studs to be min 3-1/2 in. (89 mm) wide, fabricated from min 25 MSG galvanized steel, spaced max 24 in. (610 mm) OC. Additional studs to be used to completely frame around opening.
   B. Gypsum Board* — Min 5/8 in. (16 mm) thick with square or tapered edges. The gypsum board type, number of layers and sheet orientation shall be as specified in the individual Wall and Partition Design Number. The max diam of opening is 5 in. (127 mm).

   The hourly F Rating of the firestop system is equal to the hourly fire rating of the wall assembly in which it is installed. The hourly T rating is 0 and 1-1/2 Hr for 1 and 2 Hr rated assemblies, respectively.
2. Through Penetrants — One nonmetallic pipe to be installed concentrically or eccentrically within the firestop system. Annular space between pipe and periphery of opening to be min 0 in. (point contact) and max 1/2 in. (13 mm). Pipe to be rigidly supported on both sides of wall assembly. The following types and sizes of nonmetallic pipes may be used:
   A. Polyvinyl Chloride (PVC) Pipe — Nom 4 in. (102 mm) diam (or smaller) Schedule 40 solid or cellular core PVC pipe for use in closed (process or supply) or vented (drain, waste or vent) piping systems.
   B. Chlorinated Polyvinyl Chloride (CPVC) Pipe — Nom 4 in. (102 mm) diam (or smaller) SDR 13.5 CPVC pipe for use in closed (process or supply) piping systems.
   C. Acrylonitrile Butadiene Styrene (ABS) Pipe — Nom 4 in. (102 mm) diam (or smaller) Schedule 40 solid ABS pipe for use in closed (process or supply) or vented (drain, waste or vent) piping systems.
   D. Flame Retardant Polypropylene (FRPP) Pipe — Nom 4 in. (102 mm) diam (or smaller) Schedule 40 (or heavier) FRPP pipe for use in closed (process or supply) or vented (drain, waste or vent) piping systems.

Reproduced by HILTI, Inc. Courtesy of
Underwriters Laboratories, Inc.
January 26, 2015

Customer Hotline: Hong Kong 8228 8118, Macau 00800 8228 8118 Email: hksales@hilti.com

Classified by
Underwriters Laboratories, Inc.
to UL 1479

System No. W-L-2411

3. Nonmetallic Pipe Coupling — (Optional) - Pipe coupling to be the same size and type of pipe and installed such that one end of coupling is flush with either side of wall assembly and extending outward. As an alternate, the coupling may be recessed into annular space within the opening and extend a nom 1/4 in. (6 mm) beyond the steel collar on either side of the wall.
4. Firestop System — The firestop system shall consist of the following:
   A. Fill, Void or Cavity Material* —Sealant — If the coupling (Item 3) is recessed into the opening, a min 1/4 in. (6 mm) thickness of fill material, shall be applied within the annulus, flush with both surfaces of wall.
   HILTI CONSTRUCTION CHEMICALS, DIV OF HILTI INC — FS-ONE Sealant or FS-ONE MAX Intumescent Sealant
   B. Fill, Void or Cavity Material* — Wrap Strip — Nom 3/16 in. (5 mm) thick by 1 in. wide intumescent wrap strip for penetrants having a nom diam 2 in. (51 mm) or less. Nom 3/16 in. (5 mm) thick by 1-3/4 in. (44 mm) wide intumescent wrap strip for penetrants having a nom diam greater than 2 in. (51 mm). Layers of wrap strip are continuously wrapped around the pipe two times with end held in place with aluminum tape. Wrap strip butted tightly both surfaces of wall.
   HILTI CONSTRUCTION CHEMICALS, DIV OF HILTI INC — CP 648E Wrap Strip
   C. Steel Collar — Steel collar fabricated from coils of precut min 0.016 in. (0.4 mm) thick (No. 28 gauge) galv steel available from fill material manufacturer. Collar shall be min 1 in. (25 mm) and 1-3/4 in. (44 mm) deep for 1 in. (25 mm) and 1-3/4 in. (44 mm) wrap strips, respectively with 1 in. (25 mm) wide by 2 in. (51 mm) long anchor tabs on 1-3/4 in. (44 mm) centers for securement to both surfaces of wall. In addition, collars contain preformed retainer tabs 1/2 in. (13 mm) wide by 3/16 in. (5 mm) long, located opposite the anchor tabs. Collar shall be tightly wrapped over the wrap strip, overlapping min 1 in. (25 mm) at seam and compressed with a min 1/2 in. (13 mm) wide by 0.028 in. (0.7 mm) thick stainless steel band at collar mid-height. Every other anchor tab of collar secured to surface of wall with min 1-1/2 in. (38 mm) long drywall or laminate screws with min 3/4 in. (19 mm) steel washers.

* Indicates such products shall bear the UL or cUL Certification Mark for jurisdictions employing the UL or cUL Certification (such as Canada), respectively.

Reproduced by HILTI, Inc. Courtesy of
Underwriters Laboratories, Inc.
January 26, 2015

System No. C-AJ-3095

Classified by Underwriters Laboratories, Inc. to UL 1479 and CAN/ULC-S115

ANSI/UL1479 (ASTM E814)	CAN/ULC S115
F Rating — 3 Hr	F Rating — 3 Hr
T Ratings — 0, 1/2 and 3/4 Hr (See Item 3)	FT Ratings — 0, 1/2 and 3/4 Hr (See Item 3)
	FH Rating — 3 Hr
	FTH Ratings — 0, 1/2 and 3/4 Hr (See Item 3)

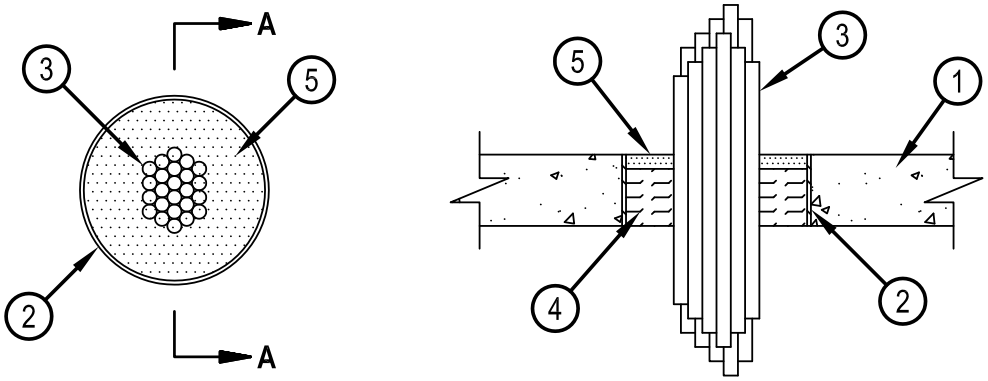

SECTION A-A

1. Floor or Wall Assembly — Min 2-1/2 in. (64 mm) thick reinforced lightweight or normal weight (100-150 pcf or 1600 2400 kg/m3) concrete floor or min 3 in. (76 mm) thick reinforced lightweight or normal weight concrete wall. Wall may also be constructed of any UL Classified Concrete Blocks*. Max diam of opening is 6 in. (152 mm).

See Concrete Blocks (CAZT) category in the Fire Resistance Directory for names of manufacturers.

2. Sleeve — (Optional) — Nom 6 in. (152 mm) diam (or smaller) Schedule 10 (or heavier) steel pipe cast or grouted into floor or wall assembly, flush with floor or wall surfaces or extending a max 3 in. (76 mm) above the floor or both surfaces of the wall. If the steel sleeve extends above the floor or both surfaces of the wall, the T Rating of the firestop system is 0 Hr.

3. Cables — Aggregate cross-sectional area of cables in opening to be min 25 percent to max 45 percent of the aggregate cross-sectional area of the opening. Cables to be rigidly supported on both sides of floor or wall assembly. Any combination of the following types and sizes of metallic conductor or fiber optic cable may be used:

   A. Max 500 kcmil single copper connector power cable with thermoplastic insulation and polyvinyl chloride (PVC) jacket. When single copper conductor power cable is used, T, FT and FTH Rating is 0 hr.

   B. Max 350 kcmil single conductor power cables with either aluminum or copper conductors and cross-linked polyethylene (XPLE) insulation. When single aluminum conductor power cable is used, T Rating is 0 hr. When single copper conductor power cable is used, T, FT and FTH Rating is 1/2 hr.

   C. Max 300 pair No. 24 AWG copper conductor telecommunication cables with polyvinyl chloride (PVC) insulation and jacket material. When telecommunication cable is used, T, FT and FTH Rating is 0 hr.

   D. Max three copper connector No. 6 AWG cable with polyvinyl chloride (PVC) insulation and jacket material. When multi-connector power cable is used, T Rating is 0 hr.

   E. Max 7/C copper conductor No. 12 AWG multiconductor power and control cables with PVC or cross-linked polyethylene (XLPE) insulation and PVC jacket. When multiconductor power and control cable is used, T, FT and FTH Rating is 3/4 hr.

   F. Multiple fiber optical communication cables jacketed with PVC and having a max outside diam of 1/2 in. When fiber optic cable is used, T, FT and FTH Rating is 3/4 hr.

   G. Max 3/C copper conductor No. 12 AWG with Bare aluminum ground, polyvinyl chloride (PVC) insulated steel, Metal-clad cable+. When MC cable is used, T, FT and FTH Rating is 0 hr.

   AFC CABLE SYSTEMS INC

Reproduced by HILTI, Inc. Courtesy of Underwriters Laboratories, Inc.
January 14, 2015

System No. C-AJ-3095

H. Max 3/C with ground 2/0 AWG copper conductor SER cable with cross-linked polyethylene (XLPE) insulation and polyvinyl chloride (PVC) jacket. When SER cable is used, T, FT and FTH Rating is 0 hr.

I. Max RG/U coaxial cable with polyethylene (PE) insulation and polyvinyl chloride (PVC) jacket having a max outside diameter of ½ in. When coaxial cable is used, T Rating is 0 hr.

J. Fire Resistive Cables* - Max 1-1/4 in. (32 mm) diam single conductor or multi conductor Type MI cable. A min 1/8 in. (3 mm) separation shall be maintained between MI cables and any other type of cable. When Fire Resistive Cables *are used, T, FT and FTH Rating is 0 hr.

K. Through Penetrating Product* — Any Cables, Metal-Clad Cable+ or Armored Cable+ currently Classified under the Through Penetrating Products category.

See Through Penetrating Product (XHLY) category in the Fire Resistance Directory for names of manufacturers.

4. Packing Material — Min 2 in. (51 mm) thickness of min 4 pcf (64 kg/m3) mineral wool batt insulation firmly packed into opening as a permanent form. Packing material to be recessed 1/2 in. (13 mm) from top surface of floor or from both surfaces of wall to accommodate the fill material. If the steel sleeve (Item 2) extends above the top of the floor, the packing material shall be flush with the bottom surface of the floor.

5. Fill, Void or Cavity Material* — Sealant — Min 1/2 in. (13 mm) thickness of fill material applied within the annulus, flush with top surface of floor or with both surfaces of wall.

HILTI CONSTRUCTION CHEMICALS, DIV OF HILTI INC — FS-One Sealant or FS-ONE MAX Intumescent Sealant

* Indicates such products shall bear the UL or cUL Certification Mark for jurisdictions employing the UL or cUL Certification (such as Canada), respectively.

Reproduced by HILTI, Inc. Courtesy of
Underwriters Laboratories, Inc.
January 14, 2015

System No. C-AJ-3180

Classified by Underwriters Laboratories, Inc. to UL 1479 and CAN/ULC-S115

ANSI/UL1479 (ASTM E814)	CAN/ULC S115
F Rating — 3 Hr	F Rating — 3 Hr
T Rating — 0 Hr	FT Rating — 0 Hr
	FH Rating — 3 Hr
	FTH Rating — 0 Hr

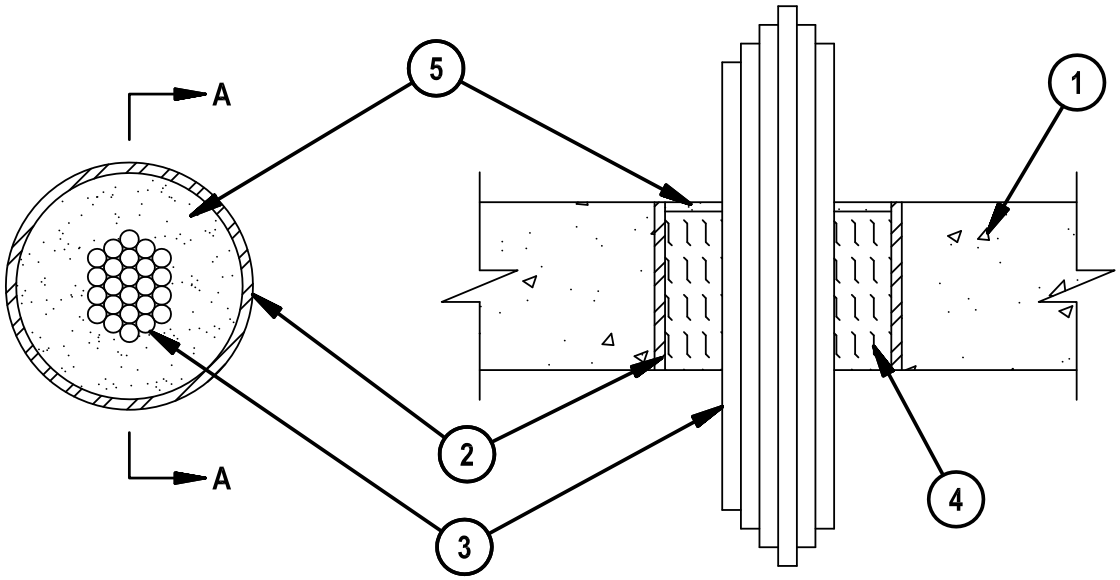

SECTION A-A

1. Floor or Wall Assembly — Min 4-1/2 in. (114 mm) thick reinforced lightweight or normal weight (100-150 pcf or 1600 2400 kg/m3) concrete floor or min 4-3/4 in. (121 mm) thick reinforced lightweight or normal weight concrete wall. Wall may also be constructed of any UL Classified Concrete Blocks*. Max diam of opening is 6 in.(152 mm).
   See Concrete Blocks (CAZT) category in the Fire Resistance Directory for names of manufacturers.
2. Steel Sleeve — (Optional) — Nom 6 in. (152 mm) diam (or smaller) Schedule 40 (or heavier) steel pipe cast or grouted into floor or wall assembly, flush with floor or wall surfaces.

Reproduced by HILTI, Inc. Courtesy of Underwriters Laboratories, Inc.
January 13, 2015

Classified by
Underwriters Laboratories, Inc.
to UL 1479 and CAN/ULC-S115

System No. C-AJ-3180

3. Cables — Aggregate cross-sectional area of cables in opening to be max 45 percent of the aggregate cross-sectional area of the opening. Cables to be rigidly supported on both sides of floor or wall assembly. Any combination of the following types and sizes of metallic conductor or fiber optic cable may be used:
   A. Max 500 kcmil single copper connector power cable with thermoplastic insulation and polyvinyl chloride (PVC) jacket.
   B. Max 300 pair No. 24 AWG copper conductor telecommunication cables with polyvinyl chloride (PVC) insulation and jacket material.
   C. Max 7/C copper conductor No. 12 AWG multiconductor power and control cables with polyvinyl chloride (PVC) or cross-linked polyethylene (XLPE) insulation and PVC jacket.
   D. Multiple fiber optical communication cables jacketed with PVC and having a max outside diam of 1/2 in. (13 mm).
   E. Max 3/C copper conductor No. 12 AWG with bare aluminum ground, polyvinyl chloride (PVC) insulated steel, Metal-clad cable.
   F. Max 3/C with ground 2/0 AWG copper conductor SER cable with cross-linked polyethylene (XLPE) insulation and polyvinyl chloride (PVC) jacket.
   G. RG/U coaxial cable with polyethylene (PE) insulation and polyvinyl chloride (PVC) jacket having a max outside diameter of ½ in. (13 mm)
   H. Fire Resistive Cables* - Max 1-1/4 in. (32 mm) diam single conductor or multi conductor Type MI cable. A min 1/8 in. (3 mm) separation shall be maintained between MI cables and any other types of cable.
4. Packing Material — Min 4-1/4 in. (108 mm) thickness of min 4 pcf (64 kg/m3) mineral wool batt insulation firmly packed into opening as a permanent form. Packing material to be recessed from top surface of floor to accommodate the required thickness of fill material.
5. Fill, Void or Cavity Material* — Sealant — Min 1/4 in. (6.4 mm) thickness of fill material applied within the annulus, flush with top surface of floor or with both surfaces of wall.
   HILTI CONSTRUCTION CHEMICALS, DIV OF HILTI INC — FS-One Sealant or FS-ONE MAX Intumescent Sealant.

* Indicates such products shall bear the UL or cUL Certification Mark for jurisdictions employing the UL or cUL Certification (such as Canada), respectively.

Reproduced by HILTI, Inc. Courtesy of
Underwriters Laboratories, Inc.
January 13, 2015

Classified by
Underwriters Laboratories, Inc.
to UL 1479 and CAN/ULC-S115

System No. C-AJ-3181

F Rating — 3 Hr
T Rating — 0 Hr

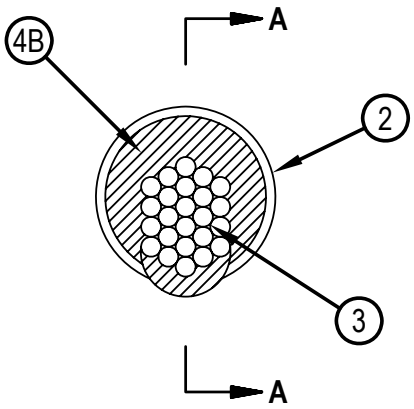

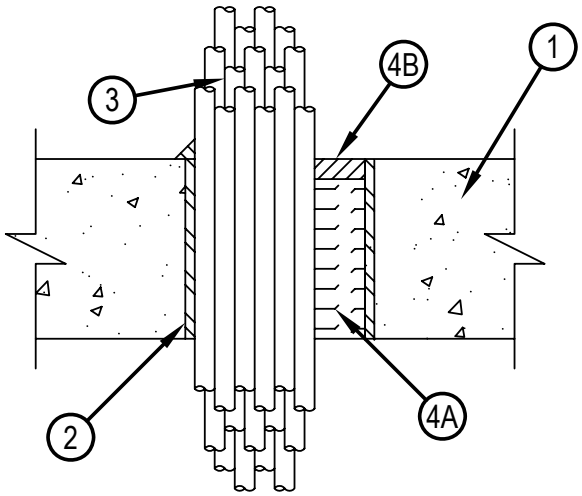

SECTION A-A

1. Floor or Wall Assembly — Min 4-1/2 in. (114 mm) thick reinforced lightweight or normal weight (100-150 pcf or 1600 2400 kg/m3) concrete. Wall may also be constructed of any UL Classified Concrete Blocks*. Max diam of opening is 4 in.
   See Concrete Blocks (CAZT) in the Fire Resistance Directory for names of manufacturers.
2. Steel Sleeve — (Optional) - Nom 4 in. (102 mm) diam (or smaller) Schedule 40 (or heavier) steel sleeve, cast or grouted into floor or wall assembly, flush with both surfaces of floor or wall assembly.
3. Cables — Aggregate cross-sectional area of cables in sleeve or opening to be min 25% to max 60% of the cross-sectional area inside the sleeve or opening. The annular space between cables and periphery of opening shall be min of 0 in. (0 mm, point contact) to max 1-7/8 in. (48 mm). Cables to be rigidly supported on both sides of floor or wall assembly. Any combination of the following types and sizes of cable may be used:
   A. Max 300 pair No. 24 AWG copper conductor telephone cables with polyvinyl chloride (PVC) insulation and jacket.
   B. Max 500 kcmil cable with polyvinyl chloride (PVC) insulation and jacket.
   C. Max 7/C No. 12 AWG copper conductor power cable with polyvinyl chloride (PVC) insulation and jacket.
   D. Max 24 fibers 1/2 in. diam fiber optic cable.
   E. Max 3/C No. 12 AWG metal-clad cable.
   F. Max 3/C with ground 2/0 AWG copper conductor SER cable with cross-linked polyethylene (XLPE) insulation and polyvinyl chloride (PVC) jacket.
   G. RG/U coaxial cable with polyethylene (PE) insulation and polyvinyl chloride (PVC) jacket having a max outside diameter of ½ in. (13 mm).
   H. Fire Resistive Cables* - Max 1-1/4 in. (32 mm) diam single conductor or multi conductor Type MI cable. A min 1/8 in. (3 mm) separation shall be maintained between MI cables and any other type of cable.
4. Firestop System — The details of the firestop system shall be as follows:
   A. Packing Material — Min. 4 in. (102 mm) thickness of min 4 pcf (64 kg/m3) mineral wool batt insulation firmly packed into opening as a permanent form. Packing material to be recessed from top surface of floor or from both surfaces of wall as required to accommodate the required thickness of fill material.
   B. Fill, Void or Cavity Materials*-Caulk — Min 1/2 in. (13 mm) thickness of fill material applied within the annulus, flush with top surface of floor or with both surfaces of wall. At the point contact location between penetrant and sleeve or concrete, a min 1/2 in. (13 mm) diam bead of fill material applied at the sleeve/cables or concrete/cables interface on the top surface of floor or both surfaces of wall.
   HILTI CONSTRUCTION CHEMICALS, DIV OF HILTI INC — CP 606 Flexible Firestop Sealant
   *Bearing the UL Classification Mark

Hilti Firestop Systems

Reproduced by HILTI, Inc. Courtesy of
Underwriters Laboratories, Inc.
October 15, 2008

System No. C-AJ-3239

Classified by Underwriters Laboratories, Inc. to UL 1479 and CAN/ULC-S115

ANSI/UL1479 (ASTM E814)	CAN/ULC S115
F Rating — 3 Hr	F Rating — 3 Hr
T Ratings — 0, 1/2, 3/4 and 1 Hr (See Item 3)	FT Ratings — 0, 1/2, 3/4 and 1 Hr (See Item 3)
	FH Rating — 3 Hr
	FTH Ratings — 0, 1/2, 3/4 and 1 Hr (See Item 3)

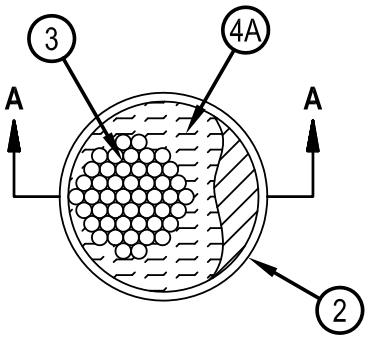

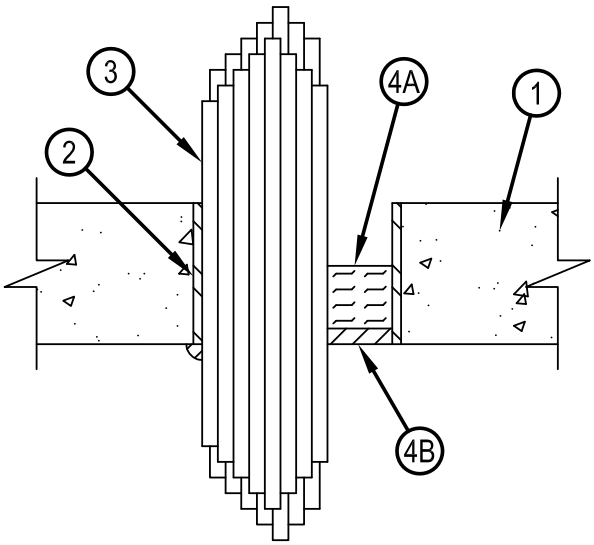

SECTION A-A

1. Floor or Wall Assembly — Min 4-1/2 in. (114 mm) thick reinforced lightweight or normal weight (100-150 pcf or 1600-2400 kg/m3) concrete. Wall may also be constructed of any UL Classified Concrete Blocks*. Max diam of opening is 6 in. (152 mm).
   See Concrete Blocks (CAZT) category in Fire Resistance Directory for names of manufacturers.
2. Metallic Sleeve — (Optional) —Nom 6 in. (152 mm) diam (or smaller) Schedule 10 (or heavier) steel sleeve cast or grouted into floor or wall assembly, flush with both surfaces of floor or wall surfaces.
3. Cables — Aggregate cross-sectional area of cables in opening to be max 33 percent of the aggregate cross-sectional area of the opening. The annular space between the cable bundle and the periphery of the opening shall be min 0 in. (point contact) to max 2-1/2 in. (64 mm). Cables to be rigidly supported on both sides of floor or wall assembly. Any combination of the following types and sizes of cables may be used:
   A. Max 7/C No. 12 AWG with polyvinyl chloride (PVC) jacket. When the 7/C - No. 12 AWG cable is used, the T, FT and FTH Rating is 3/4 hr.
   B. Max 300 pair No. 24 AWG telephone cable with PVC jacket. When the 300 pair cable is used, the T, FT and FTH Rating is 1/2 hr.
   C. Type RG/6 coaxial cable with fluorinated ethylene jacket. When the RG/6 coaxial cable is used, the T, FT and FTH Rating is 1 hr.
   D. Max 3/C No. 12 AWG (or smaller) metal-clad cable. When the 3/C No. 12 AWG cable is used, the T, FT and FTH Rating is 1/2 hr.
   E. Max 3/C (with ground) 2/0 AWG (or smaller) aluminum conductor SER cable. When the 3/C - 2/0 AWG cable is used, the T, FT and FTH Rating is 1/2 hr.
   F. Max 1/2 in. (13 mm) diam fiber-optic cable with PVC jacket. When the fiber optic cable is used, the T, FT and FTH Rating is 1 hr.
   G. Max 1/C - 750 kcmil power cable with PVC jacket. When the 1/C - No. 750 kcmil cable is used, the T, FT and FTH Rating is 0 hr.
   H. Max 1 in. (25 mm) diam metal clad TEK cable with PVC jacket. When the TEK cable is used, the T, FT and FTH Rating is 0 hr.
   I. Fire Resistive Cables* - Max 1-1/4 in. (32 mm) diam single conductor or multi conductor Type MI cable. A min 1/8 in. (3 mm) separation shall be maintained between MI cables and any other types of cable. When the Type MI cable is used, the T, FT and FTH Rating is 0 hr.

CLASSIFIED C UL US

Classified by
Underwriters Laboratories, Inc.
to UL 1479 and CAN/ULC-S115

System No. C-AJ-3239

4. Firestop System — The firestop system shall consist of the following:

A. Packing Material — Min 2 in. (51 mm) thickness of min 4 pcf (64 kg/m3) mineral wool batt insulation firmly packed into opening as a permanent form. Packing material to be recessed from bottom surface of floor or from both surfaces of wall to accommodate the required thickness of fill material.

B. Fill, Void or Cavity Materials* - Sealant — Min 1/2 in. (13 mm) thickness of fill material within the annulus, flush with bottom surface of floor or with both surfaces of wall. Min 1/2 in. (13 mm) bead of fill material applied at the concrete/cable bundle interface on bottom surface of floor or both surfaces of wall.

HILTI CONSTRUCTION CHEMICALS, DIV OF HILTI INC — FS-ONE Sealant or FS-ONE MAX Intumescent Sealant.

* Indicates such products shall bear the UL or cUL Certification Mark for jurisdictions employing the UL or cUL Certification (such as Canada), respectively.

Reproduced by HILTI, Inc. Courtesy of
Underwriters Laboratories, Inc.
January 13, 2015

Classified by
Underwriters Laboratories, Inc.
to UL 1479 and CAN/ULC-S115

System No. C-AJ-3282

F Rating - 2 Hr
T Ratings -3/4 and 1Hr (See Item 2)

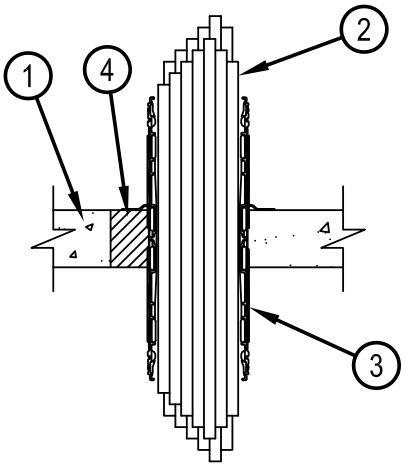

1. Floor or Wall Assembly — Min 2-1/2 in. (64 mm) thick reinforced lightweight or normal weight (100-150 pcf or 1600-2400 kg/m3) concrete. Wall may also be constructed of any UL Classified Concrete Blocks*. Opening in floor or wall to be max 4 in. (102 mm) diam for 2" device and max 6 in. (152 mm) diam for 4" device.
   See Concrete Blocks (CAZT) category in the Fire Resistance Directory for names of manufacturers.

1A. Floor Assembly — (Not Shown) - As an alternate to Item 1, fire-rated unprotected concrete and steel floor assembly may be used. Floor assembly to be constructed of the materials and in the manner described in the individual D900 Series Floor-Ceiling Design in the UL Fire Resistance Directory and shall include the following construction features:
   A. Concrete — Min 2-1/2 in. (64 mm) thick reinforced lightweight or normal weight (100-150 pcf or 1600-2400 kg/m3) concrete.
   B. Steel Floor and Form Units — Composite or noncomposite max 3 in. (76 mm) deep fluted galv units as specified in the individual Floor-Ceiling design. Opening in floor or wall to be max 4 in. (102 mm) diam for 2" device and max 6 in. (152 mm) diam for 4" device.

2. Cables — Within the loading area for each firestop device, the cables may represent a 0 to 100 percent visual fill. Cables to be tightly bundled within the device and rigidly supported on both sides of floor or wall assembly. Any combination of the following types of cables may be used:
   A. Max 100 pair No. 24 AWG (or smaller) copper conductor telecommunication cable with polyvinyl chloride (PVC) jacketing and insulation.
   B. Max 7/C No. 12 AWG copper conductor control cable with PVC or XLPE jacket and insulation.
   C. Max 4/0 AWG Type RHH ground cable.
   D. Max 4 pr No. 22 AWG Cat 6 computer cables.
   E. Max RG 6/U coaxial cable with fluorinated ethylene insulation and jacketing.
   F. Fiber optic cable with polyvinyl chloride (PVC) or polyethylene (PE) jacket and insulation having a max diam of 1/2 in. (13 mm).
   G. Max 20/C No. 22 AWG shielded printer cable with PVC jacket.
   H. Through-Penetrating Product* - Two copper conductors No. 18 AWG (or smaller) Power or Non Power Limited Fire Alarm Cable with or without a jacket under a metal armor.
      AFC CABLE SYSTEMS INC
   I. Max. ¼" (6 mm) diameter S-Video Cable consisting of 2 max 24 AWG 75 ohm coax or twisted pair cable with PE insulation and PVC jacket.
   The T Rating for the firestop system is 3/4 hr except that for blank openings with no cables, the T Rating is 1 hr.

3. Firestop Device* — Firestop device consists of a corrugated steel tube with an inner plastic housing, intumescent material rings, tightly twisted inner fabric smoke seal, flanges and gasketing material (not shown, optional). Firestop device to be installed in accordance with the accompanying installation instructions. Device slid into floor or wall such that ends project an equal distance from the approximate centerline of the assembly. The annular space between the device and the periphery of the opening shall be min 0 in. (point contact). Device provided with flange(s) that are spun clockwise onto device threads, over gasketing material butting tightly to top side of floor or both sides of wall.
   HILTI CONSTRUCTION CHEMICALS, DIV OF HILTI INC — CP 653 2" Speed Sleeve and CP 653 4" Speed Sleeve

4. Fill, Void or Cavity Material* - Mortar — Min 2-1/2 in. (64 mm) thickness of fill material applied within the annulus between firestop device and periphery of opening, flush with bottom surface of floor or both surfaces of wall.
   HILTI CONSTRUCTION CHEMICALS, DIV OF HILTI INC — CP 637 Firestop Mortar

*Bearing the UL Classification Mark

Hilti Firestop Systems

Reproduced by HILTI, Inc. Courtesy of
Underwriters Laboratories, Inc.
July 22, 2014

Classified by
Underwriters Laboratories, Inc.
to UL 1479 and CAN/ULC-S115

System No. W-J-3060

ANSI/UL1479 (ASTM E814)	CAN/ULC S115
F Ratings — 1 and 2 Hr (See Item 1)	F Ratings — 1 and 2 Hr (See Item 1)
T Rating — 0 Hr	FT Rating — 0 Hr
L Rating At Ambient — 15 CFM/sq ft	FH Ratings — 1 and 2 Hr (See Item 1)
L Rating At 400 F — 8 CFM/sq ft	FTH Rating — 0 Hr
	L Rating At Ambient — 15 CFM/sq ft
	L Rating At 400 F — 8 CFM/sq ft

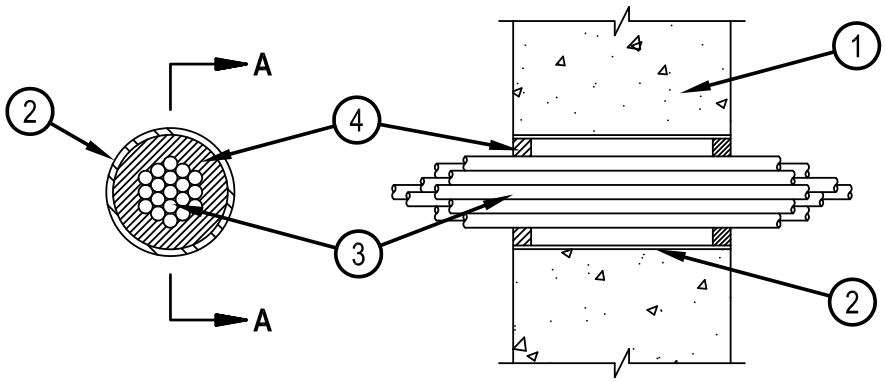

SECTION A-A

1. Wall Assembly — Min 4-3/4 in. and 6 in. (121 and 152 mm) thick reinforced lightweight or normal weight (100-150 pcf or 1600-2400 kg/m3) concrete for 1 and 2 hr ratings , respectively. Wall may also be constructed of any UL Classified Concrete Blocks*. Max diam of opening is 4 in (102 mm). Max diam of opening is 5-1/2 in. (138 mm) when sleeve (Item 2) is employed.
   See Concrete Blocks (CAZT) category in the Fire Resistance Directory for names of manufacturers.
2. Steel Sleeve — (Optional) — Nom 4 in. (102 mm) diam (or smaller) steel electrical metallic tubing (EMT) of Schedule 5 (or heavier) steel pipe or min 0.016 thick (28 MSG or 0.4 mm) galv steel sleeve friction fit or cast into wall flush with wall surfaces. When Schedule 5 steel pipe or EMT is used, sleeve may extend up to 18 in. (457 mm) beyond the wall surfaces. As an option when Schedule 5 steel pipe or EMT is used, sleeve may extend continuously beyond one wall surface.

Reproduced by HILTI, Inc. Courtesy of
Underwriters Laboratories, Inc.
January 22, 2015

System No. W-J-3060

3. Cables — Aggregate cross sectional area of cables to be max 45 percent of the cross sectional area of the opening. Cables installed either concentrically or eccentrically within the firestop system. The annular space between cables and the periphery of the opening shall be min 0 in. (point contact) to max 1 in. (25 mm). When sleeve is continuous on one side of wall (see Item 2), the cable fill may be 0 to 45% and the max annular space within sleeve is not limited. Cables to be rigidly supported on both sides of wall assembly. The following types of cables may be used:
   A. 7/C No. 12 AWG cable with PVC insulation and outer jacket.
   B. Max 25 pair No. 24 AWG telephone cable with PVC insulation and outer jacket.
   C. Max RG 59 (or smaller) coaxial cable with polyethylene insulation and PVC jacket.
   D. Max RG 6/U coaxial cable with fluorinated ethylene insulation and jacketing.
   E. Multiple 24 fiber optic communication cable with PVC jacket, have a max outside diam of 5/8 in. (16 mm).
   F. Max four pair No. 22 AWG Cat 5 or Cat 6 computer cables.
   G. Through Penetrating Product*—Max three copper connector No. 8 AWG Metal-clad Cable+.
      AFC CABLE SYSTEMS INC
   H. Through Penetrating Product* — Any cables, Metal-Clad Cable+ or Armored Cable+ currently Classified under the Through Penetrating Products category.
      See Through Penetrating Product (XHLY) category in the Fire Resistance Directory for names of manufacturers.
4. Fill, Void or Cavity Material* — Sealant — Min 5/8 in. (16 mm) thickness of fill material applied within annulus, flush with both surfaces of wall assembly. An additional 1/2 in. (13 mm) bead of fill material shall be applied around the perimeter of sleeve on both sides of the wall when sleeve extends beyond surface of wall.
   HILTI CONSTRUCTION CHEMICALS, DIV OF HILTI INC — CP601S Sealant, CP606 Sealant, CFS-S SIL GG Sealant, FS-ONE Sealant, FS-ONE MAX Intumescent Sealant, or CP618 Putty
5. Packing Material — (Optional, Not Shown) — Mineral wool forming material may be used as a backer for the fill material (Item 4). When used, it shall be firmly packed into annular space within the sleeve as a permanent form and recessed from end of sleeve to accommodate the required thickness of fill material.

* Indicates such products shall bear the UL or cUL Certification Mark for jurisdictions employing the UL or cUL Certification (such as Canada), respectively.

+Bearing the UL Listing Mark

Reproduced by HILTI, Inc. Courtesy of
Underwriters Laboratories, Inc.
January 22, 2015

Classified by Underwriters Laboratories, Inc. to UL 1479 and CAN/ULC-S115

System No. W-L-3065

ANSI/UL1479 (ASTM E814)	CAN/ULC S115
F Rating — 1 and 2 Hr (See Item 1)	F Rating — 1 and 2 Hr (See Item 1)
T Rating — 0 and 3/4 Hr (See item 3)	FT Rating — 0 and 3/4 Hr (See item 3)
L Rating At Ambient — 15 CFM/sq ft	FH Rating — 1 and 2 Hr (See Item 1)
L Rating At 400 F — 8 CFM/sq ft	FTH Rating — 0 and 3/4 Hr (See item 3)
	L Rating At Ambient — 15 CFM/sq ft
	L Rating At 400 F — 8 CFM/sq ft

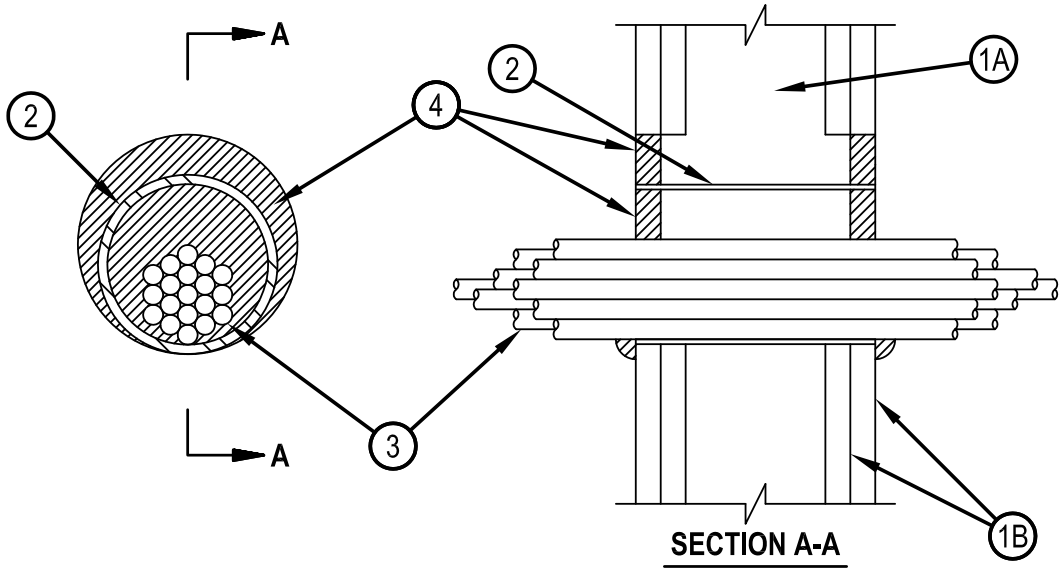

SECTION A-A

1. Wall Assembly — The 1 or 2 fire-rated gypsum wallboard/stud wall assembly shall be constructed of the materials and in the manner specified in the individual U300, U400, V400 or W400 Series Wall and Partition Designs in the UL Fire Resistance Directory and shall include the following construction features:
   A. Studs — Wall framing may consist of either wood studs or steel channel studs. Wood studs to consist of nom 2 by 4 in. (51 by 102 mm) lumber spaced 16 in. (406 mm) OC. Steel studs to be min 2-1/2 in. (64 mm) wide and spaced max 24 in. (610 mm) OC.
   B. Gypsum Board* — Nom 5/8 in. (16 mm) thick gypsum board, with square or tapered edges. The gypsum board type, thickness, number of layers, fastener type and sheet orientation shall be as specified in the individual Wall and Partition Design in the UL Fire Resistance Directory. Max diam of opening is 5-1/2 in. (138 mm) when sleeve (Item 2) is employed. Max diam of opening is 4 in. (102 mm) when sleeve (Item 2) is not employed.

   The F, FH Ratings of the firestop system are equal to the fire rating of the wall assembly.
2. Metallic Sleeve — (Optional) - Nom 4 in. (102 mm) diam (or smaller) steel electrical metallic tubing (EMT) or Schedule 5 (or heavier) steel pipe or min 0.016 in. thick (0.41 mm, No. 28 ga) galv steel sleeve installed flush with wall surfaces. The annular space between steel sleeve and periphery of opening shall be min 0 in. (0 mm, point contact) to max 1 in. (25mm). When Schedule 5 steel pipe or EMT is used, sleeve may extend up to 18 in. (457 mm) beyond the wall surfaces. As an option when Schedule 5 steel pipe or EMT is used, sleeve may extend continuously beyond one wall surface. When cable bundle penetrates wall assembly at an angle of 45 degrees, no metallic sleeve is used.

Reproduced by HILTI, Inc. Courtesy of
Underwriters Laboratories, Inc.
January 23, 2015

System No. W-L-3065

3. Cables — Aggregate cross-sectional area of cable in opening to be max 45 percent of the cross-sectional area of the opening. The annular space between the cable bundle and the periphery of the opening to be min 0 in. (point contact) to max 1 in. (25 mm). When sleeve is continuous on one side of wall (see Item 2), the cable fill may be 0 to 45% and the max annular space is not limited. Cables to be rigidly supported on both sides of the wall assembly. Cable bundle, using cables described below, may penetrate the wall at an angle not greater than 45 degrees. Any combination of the following types and sizes of copper conductor cables may be used:
   A. Max 7/C No. 12 AWG with polyvinyl chloride (PVC) insulation and jacket.
   B. Max 25 pair No. 24 AWG telephone cable with PVC insulation and jacket.
   B1. Max 4 pr No. 22 AWG Cat 5 or Cat 6 computer cables.
   C. Type RG/U coaxial cable with polyethylene (PE) insulation and PVC jacket having a max outside diameter of ½ in. (13 mm).
   C1. Max RG 6/U coaxial cable with fluorinated ethylene insulation and jacketing.
   D. Multiple fiber optical communication cable jacketed with PVC and having a max OD of 5/8 in. (16 mm).
   E. Through Penetrating Products*— Max three copper conductor No. 8 AWG .Metal-Clad Cable+.
      AFC CABLE SYSTEMS INC
   F. Max 3/C (with ground)(or smaller) No. 8 AWG copper conductor cable with PVC insulation and jacketing.
   G. Max 3/4 in. (19 mm) diam copper ground cable with or without a PVC jacket.
   H. Fire Resistive Cables* - Max 1-1/4 in. (32 mm) diam single conductor or multi conductor Type MI cable. A min 1/8 in. (3 mm) separation shall be maintained between MI cables and any other types of cable.
   I. Max 4/C with ground 300 kcmil (or smaller) aluminum SER cable with PVC insulation and jacket.
   J. Through Penetrating Product* - Any cables, Metal-Clad Cable+ or Armored Cable+ currently Classified under the Through Penetrating Products category.
   K. Maximum 3/C No. 8 AWG metal-clad cable.
   L. Maximum 5/8 diam fiber-optic cable with PVC jacket.
   For cable bundle penetrating the wall assembly at an angle of 45 degrees, the T, FT, FTH Ratings are 0 hr and 3/4 hr for 1 and 2 hr wall assemblies, respectively.
   See Through Penetrating Product (XHLY) category in the Fire Resistance Directory for names of manufacturers.
4. Fill, Void or Cavity Material*— Sealant or Putty — Fill material applied within the annulus, flush with each end of the steel sleeve or wall surface. Fill material installed symmetrically on both sides of the wall. A min 5/8 in. (16 mm) thickness of sealant is required for the 1 or 2 hr F Rating . An additional 1/2 in. (13 mm) diam bead of fill material shall be applied at the interface of sleeve with gypsum board.
   HILTI CONSTRUCTION CHEMICALS, DIV OF HILTI INC — CP601S, CP606, FS-One Sealants or FS-ONE MAX Intumescent Sealantor or CP618 Putty
5. Packing Material — (Optional, Not Shown) — Mineral wool forming material may be used as a backer for the fill material (Item 4). When used, it shall be firmly packed into annular space within the sleeve as a permanent form and recessed from end of sleeve to accommodate the required thickness of fill material.

* Indicates such products shall bear the UL or cUL Certification Mark for jurisdictions employing the UL or cUL Certification (such as Canada), respectively.

+Bearing the UL Listing Mark

Reproduced by HILTI, Inc. Courtesy of
Underwriters Laboratories, Inc.
January 23, 2015

Classified by
Underwriters Laboratories, Inc.
to UL 1479 and CAN/ULC-S115

System No. W-L-3071

ANSI/UL1479 (ASTM E814)	CAN/ULC S115
F Rating — 1 and 2 Hr (See Item 1)	F Rating — 1 and 2 Hr (See Item 1)
T Rating — 1/4 and 3/4 Hr (See Item 1)	FT Ratings — 1/4 and 3/4 Hr (See Item 1)
L Rating At Ambient - Less Than 1 CFM/sq ft	FH Rating — 1 and 2 Hr (See Item 1)
L Rating At 400 F - 4 CFM/sq ft	FTH Rating — 1/4 and 3/4 Hr (See Item 1)
	L Rating At Ambient - Less Than 1 CFM/sq ft
	L Rating At 400 F - 4 CFM/sq ft

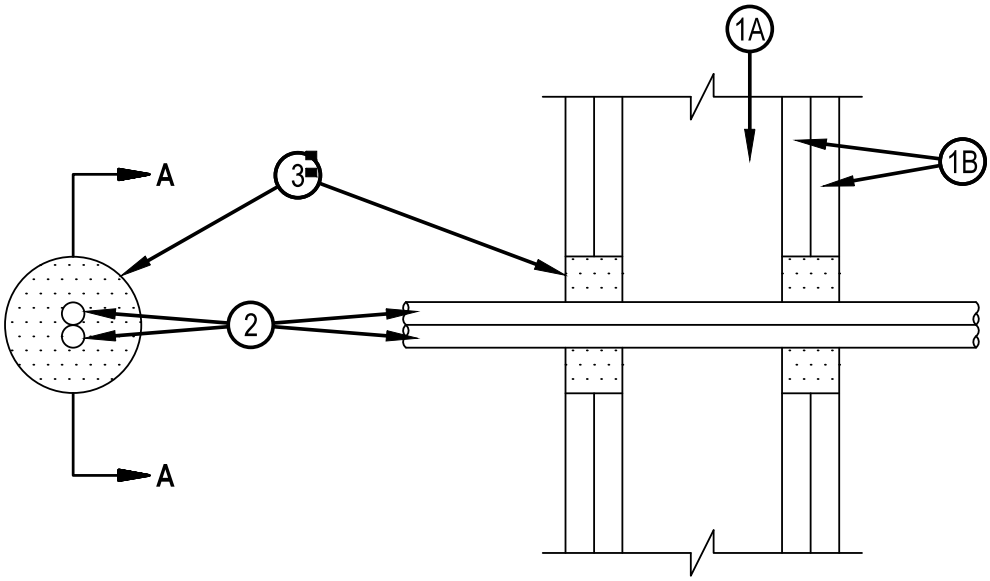

SECTION A-A

1. Wall Assembly — The fire-rated gypsum wallboard/stud wall assembly shall be constructed of the materials and in the manner specified in the individual U300, U400, V400 or W400 Series Wall and Partition Designs in the UL Fire Resistance Directory and shall include the following construction features.

A. Studs — Wall framing may consist of either wood studs or steel channel studs. Wood studs to consist of nom 2 by 4 in. (51 by 102 mm) lumber spaced 16 in. (405 mm) OC. Steel studs to be min 2-1/2 in. (64 mm) wide and spaced max 24 in. (610 mm) OC.

B. Gypsum Board* — 5/8 in. (16 mm) thick, 4 ft (122 cm) wide with square or tappered edges. The gypsum wallboard type, thickness, number of layers, fastener type and sheet orientation shall be as specified in the individual Wall and Partition Design. Max diam of opening is 3 in. (76 mm). The hourly F, FH Rating of the firestop system is equal to the hourly fire rating of the wall assembly in which it is installed. The hourly T, FT, FTH Rating of the firestop system is 1/4 and 3/4 hr for 1 and 2 hr rated wall assemblies, respectively.

2. Cables — Max two 3/C with ground No. 2/0 AWG aluminum or copper Type SER cable with polyvinyl chloride (PVC) insulation. Cable to be rigidly supported on both sides of wall assembly. The annular space between the cables and the periphery of opening shall be min 1/2 in. to max 1-1/2 in. (13 to 38 mm).

3. Fill, Void or Cavity Material* — Sealant — Installed to completely fill the annular space between the cables and gypsum wallboard on both sides of wall.

HILTI CONSTRUCTION CHEMICALS, DIV OF HILTI INC — FS-One Sealant or FS-MAX Intumescent Sealant

* Indicates such products shall bear the UL or cUL Certification Mark for jurisdictions employing the UL or cUL Certification (such as Canada), respectively.

Hilti Firestop Systems

Reproduced by HILTI, Inc. Courtesy of
Underwriters Laboratories, Inc.
January 23, 2015

System No. W-L-3139

Classified by Underwriters Laboratories, Inc. to UL 1479 and CAN/ULC-S115

ANSI/UL1479 (ASTM E814)	CAN/ULC S115
F Rating — 4 Hr	F Rating — 4 Hr
T Rating — 1 Hr	FT Rating — 1 Hr
	FH Rating — 4 Hr
	FTH Rating — 1 Hr

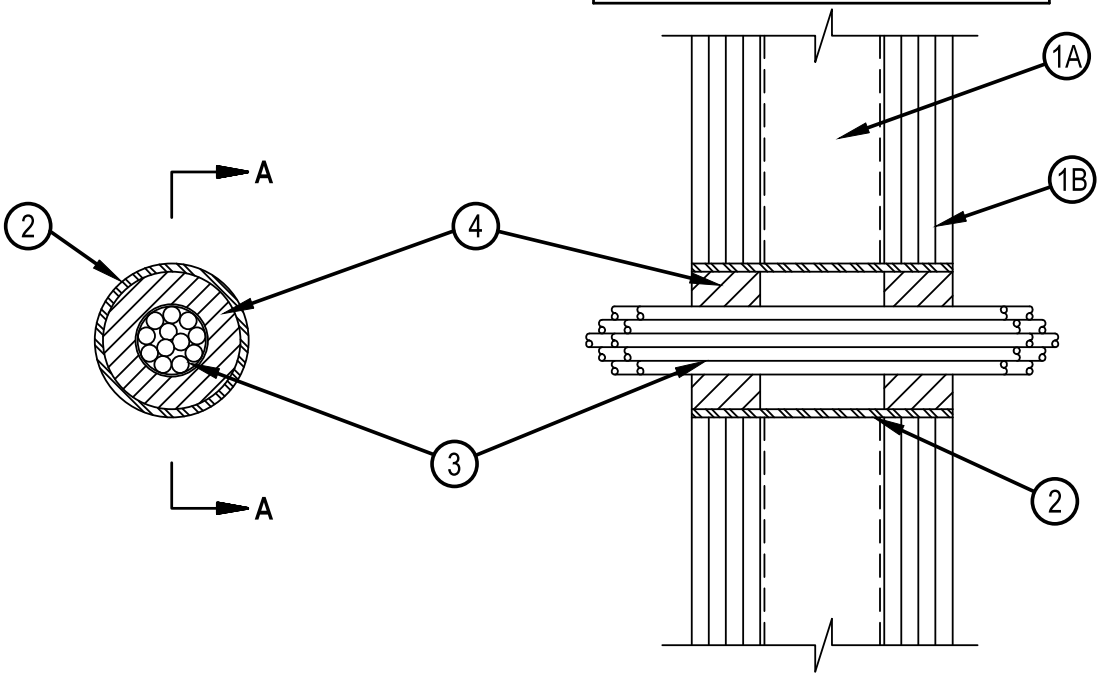

SECTION A-A

1. Wall Assembly — The 4 hr fire rated gypsum wallboard/stud wall assembly shall be constructed of the materials and in the manner described in the individual U400, V400 or W400 Series Wall or Partition Design in the UL Fire Resistance Directory and shall include the following construction features:
   A. Studs — Wall framing shall consist of steel channel studs. Steel studs to be min 3-1/2 in. (89 mm) wide by 1-3/8 in. (35 mm) deep channels spaced max 24 in. (610 mm) OC.
   B. Gypsum Board* — The gypsum wallboard type, thickness, number of layers, fastener type and sheet orientation shall be as specified in the individual Wall and Partition Design in the UL Fire Resistance Directory. Max diam of opening is 4 in. (102 mm).
2. Steel Sleeve — Nom 4 in. (102 mm) diam (or smaller) Schedule 40 (or heavier) steel pipe sleeve friction fit in nom 4 in. (102 mm) diam circular opening cut through gypsum wallboard layers. Length of steel sleeve to be equal to thickness of wall.
3. Cables — Aggregate cross sectional area of cables in opening to be max 33 percent of the cross sectional area of the opening. Cables installed either concentrically or eccentrically within the firestop system. The annular space beteween cables and the steel sleeve shall be min 1/4 in. (6 mm) to max 1 in. (25 mm). Cables to be rigidly supported on both sides of wall assembly. The following types and sizes of cables may be used:
   A. Max 7/C (with ground) No. 12 AWG cable, with PVC insulation and outer jacket.
   B. Max 25 pair No. 24 AWG (or smaller) copper conductor telephone cable with PVC insulation, with PVC jacket.
   C. Max RG59/U (or smaller) coaxial cable with fluorinated ethylene insulation and jacketing.
   D. Max 3/C (with ground) No. 10 AWG bare copper ground metal clad cable with a PVC jacket.
   E. Multiple 24 fiber-optical communication cables jacketed with polyvinyl chloride and having a max outside diam of 1/2 in. (13 mm).
4. Fill, Void or Cavity Material*—Sealant — Min 2 in. (51 mm) thickness of fill material applied within annulus, flush with both surfaces of the wall. HILTI CONSTRUCTION CHEMICALS, DIV OF HILTI INC — FS-ONE Sealant or FS-ONE MAX Intumescent Sealant

* Indicates such products shall bear the UL or cUL Certification Mark for jurisdictions employing the UL or cUL Certification (such as Canada), respectively.

Hilti Firestop Systems

Reproduced by HILTI, Inc. Courtesy of Underwriters Laboratories, Inc.
January 27, 2015

Classified by
Underwriters Laboratories, Inc.
to UL 1479 and CAN/ULC-S115

System No. W-L-3320

ANSI/UL1479 (ASTM E814)	CAN/ULC S115
F Ratings — 1 & 2 Hr (See Item 1)	F Ratings — 1 & 2 Hr (See Item 1)
T Rating — 0 Hr	FT Rating— 0 Hr
	FH Ratings — 1 & 2 Hr (See Item 1)
	FTH Rating — 0 Hr

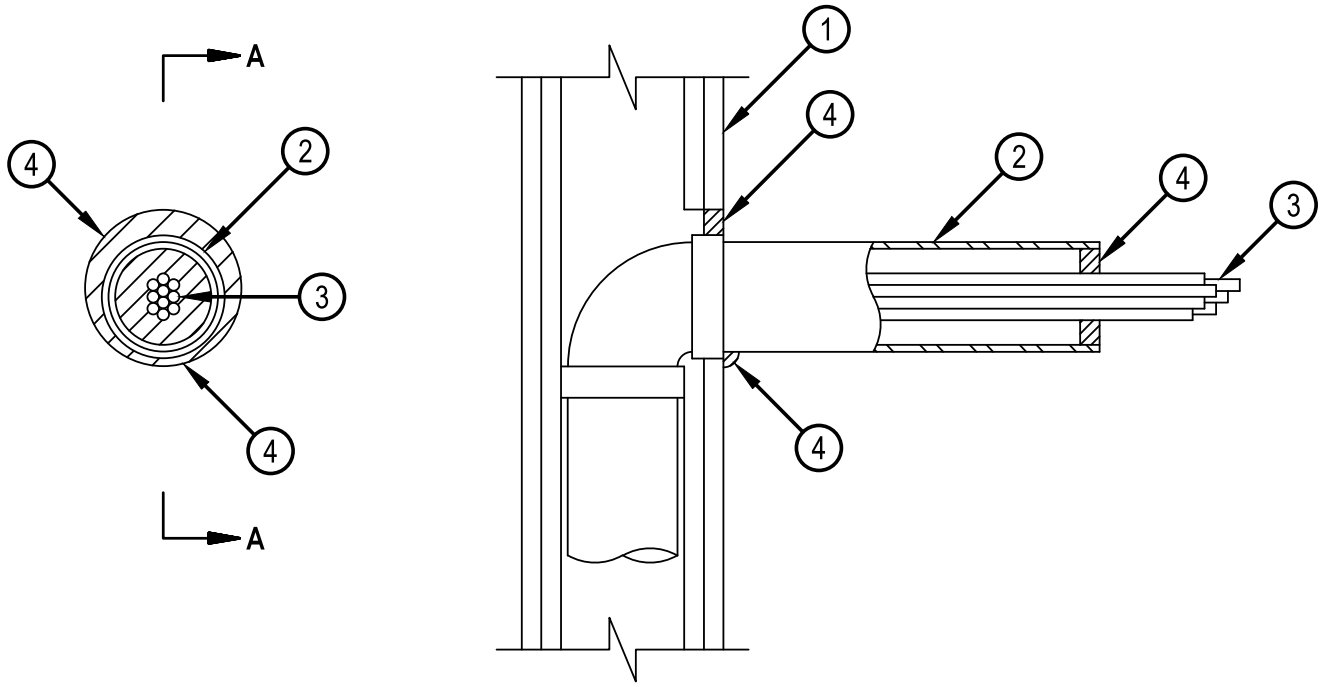

SECTION A-A

1. Wall Assembly — The 1 or 2 hr fire-rated gypsum board/stud wall assembly shall be constructed of the materials and in the manner specified in the individual U300, U400, V400 or W400 Series Wall and Partition Designs in the UL Fire Resistance Directory and shall include the following construction features:
   A. Studs — Wall framing may consist of either wood studs or steel channel studs. Wood studs to consist of nom 2 by 4 in. (51 by 102 mm) lumber spaced 16 in. (406 mm) OC. Steel studs to be min 3-1/2 in. (89 mm) wide and spaced max 24 in. (610 mm) OC.
   B. Gypsum Board* — One or two layers of nom 5/8 in. (16 mm) thick gypsum board as specified in the individual Wall and Partition Design. Max diam of opening is 5 in. (127 mm).
   The hourly F, FH Ratings of the firestop system are equal to the hourly fire rating of the wall assembly.
2. Sleeve — Nom 3 in. (76 mm) diam (or smaller) steel EMT, steel conduit or Schedule 5 (or heavier) steel pipe. The annular space between sleeve and periphery of opening shall be min. 0 in. (point contact) to max 1 in. (25 mm). Maximum projection from wall is 12 in. (305 mm). Sleeve to be rigidly supported on penetrated side of the wall assembly.

Reproduced by HILTI, Inc. Courtesy of
Underwriters Laboratories, Inc.
January 23, 2015

3. Cables — Aggregate cross-sectional area of cable in opening to be min 0 to max 45 percent of the cross-sectional area of the opening. The annular space between the cable bundle and the periphery of the opening to be min 0 in. (point contact). Cables to be rigidly supported on penetrated side of the wall assembly. Any combination of the following types and sizes of copper conductor cables may be used:
   A. Max 7/C No. 12 AWG with polyvinyl chloride (PVC) insulation and jacket.
   B. Max 25 pair No. 24 AWG telephone cable with PVC insulation and jacket.
   C. Type RG/U coaxial cable with polyethylene (PE) insulation and PVC jacket having a max outside diameter of ½ in. (13 mm).
   D. Multiple fiber optical communication cable jacketed with PVC and having a max OD of 5/8 in. (16 mm).
   E. Through Penetrating Products*— Max three copper conductor No. 8 AWG . Metal-Clad Cable+.
      AFC CABLE SYSTEMS INC
   F. Max 3/C (with ground) No. 8 AWG (or smaller) copper conductor cable with PVC insulation and jacketing.
   G. Max 3/4 in. (19 mm) diam copper ground cable with or without a PVC jacket.
   H. Fire Resistive Cables* — Max 1-1/4 in. (32 mm) diam single conductor or multi conductor Type MI cable. A min 1/8 in. (3 mm) separation shall be maintained between MI cables and any other types of cable.
4. Fill, Void or Cavity Material++— Sealant — Min 5/8 in. (16 mm) thickness of fill material applied within the annulus, flush with surface of wall. Min 1/2 in. (13 mm) diam bead of sealant applied at point contact location.
   HILTI CONSTRUCTION CHEMICALS, DIV OF HILTI INC — FS-ONE Sealant, FS-ONE MAX Intumescent Sealant, CFS-S SIL GG Sealant, CP601S Elastomeric Sealant, CP 606 Sealant, CP618 Putty
5. Packing Material — (Optional, Not Shown) — Mineral wool forming material may be used as a backer for the sealant. When used, it shall be firmly packed into annular space between cables and sleeve as a permanent form and recessed from end of sleeve to accommodate the required thickness of fill material.

++ Bearing the UL Classification Mark

Reproduced by HILTI, Inc. Courtesy of
Underwriters Laboratories, Inc.
January 23, 2015

Classified by
Underwriters Laboratories, Inc.
to UL 1479 and CAN/ULC-S115

System No. C-AJ-4017

F Rating -- 3 Hr
T Rating -- 0 Hr

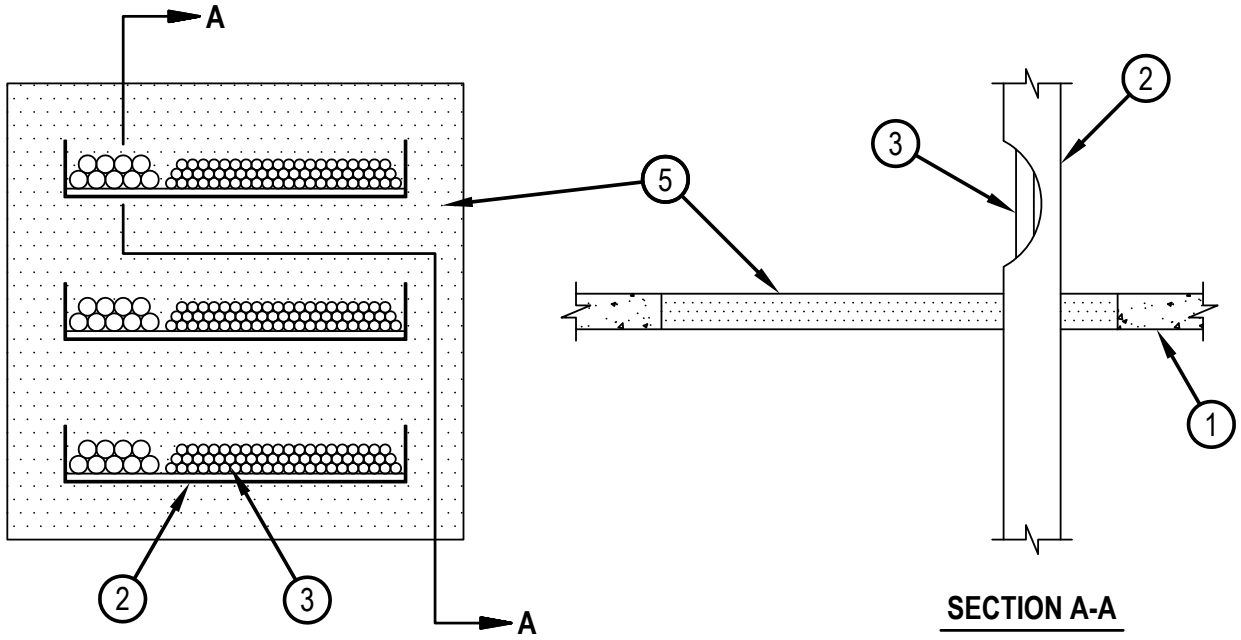

SECTION A-A

1. Floor or Wall Assembly — Min 2-1/2 in. thick reinforced lightweight or normal weight (100-150 pcf) concrete. Wall may also be constructed of any UL Classified Concrete Blocks *. Max area of opening is 1024 sq in. with max dimension of 32 in.
   See Concrete Blocks (CAZT) category in the Fire Resistance Directory for names of manufacturers.
2. Cable Tray — * — The following types of cable trays may be used:
   A. Max 24 in. wide by max 4 in. deep open ladder cable tray with channel-shaped side rails formed of min 0.050 in. thick steel with A-shaped rungs spaced 9 in. OC.
   B. Max 24 in. wide by max 4-3/16 in. deep open ladder cable tray formed of min 0.097 in. aluminum with 7/8 in. wide by 1 in. deep rungs spaced 9 in. OC.

A max of three cable trays to be installed in the opening. Of the three cable tray only one may be aluminum. The annular space between the cable trays shall be a min 5-1/4 in. The annular space between the cable tray and the periphery of the opening shall be min 1 in. Cable tray to be rigidly supported on both sides of floor or wall assembly.

3. Cables — Aggregate cross-sectional area of cables in cable tray shall be max 30 percent of the cross-sectional area of steel cable tray and max 20 percent of the cross-sectional area of aluminum cable tray, based on a max 3 in. cable loading depth within the cable tray. Any combination of the following types and sizes of copper conductor cables may be used:
   A. Max 350 kcmil single-conductor power cables with polyvinyl chloride (PVC) insulation and jacket.
   B. 7/C No. 12 AWG copper conductor cable with PVC insulation and jacket.
   C. Max 100 pair No. 24 AWG cable with PVC insulation and jacket.
4. Forms — (Not Shown) — Used as a form to prevent leakage of fill material during installation. Forms to be a rigid sheet material, cut to fit the contour of the penetrating item and positioned as required to accommodate the required thickness of fill materials. Forms may be removed after fill material has cured.
5. Fill, Void or Cavity Material* — Mortar — Min 2-1/2 in. thickness of fill material applied within the annulus. Fill material is mixed at a rate of 2.5 parts dry mix to one part water by weight in accordance with the installation instructions supplied with fill material.
   HILTI CONSTRUCTION CHEMICALS, DIV OF
   HILTI INC — Type CP636 or CP637

*Bearing the UL Classification Mark

Hilti Firestop Systems

Reproduced by HILTI, Inc. Courtesy of
Underwriters Laboratories, Inc.
March 19, 2012

Classified by
Underwriters Laboratories, Inc.
to UL 1479 and CAN/ULC-S115

System No. C-AJ-4035

ANSI/UL1479 (ASTM E814)	CAN/ULC S115
F Rating — 3 Hr	F Rating — 3 Hr
T Rating — 0 Hr	FT Rating — 0 Hr
	FH Rating — 3 Hr
	FTH Rating — 0 Hr

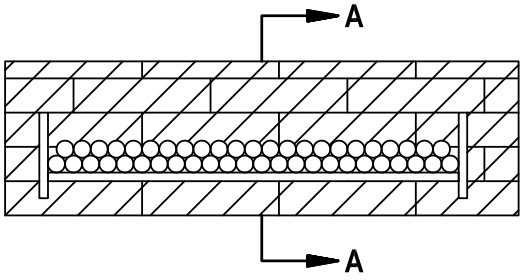

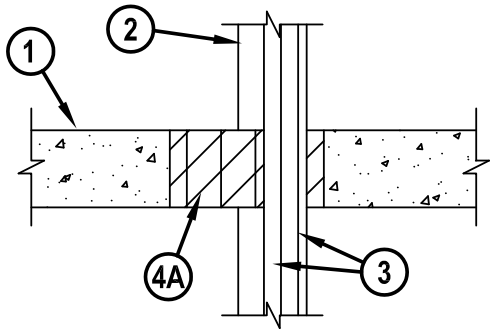

SECTION A-A

1. Floor or Wall Assembly — Min 4-1/2 in. (114 mm) thick reinforced lightweight or normal weight (100-150 pcf or 1600-2400 kg/m3) concrete. Wall may also be constructed of any UL Classified Concrete Blocks*. Max area of opening is 270 sq in (1742 cm2) with max dimension of 30 in. (762 mm).

See Concrete Blocks (CAZT) category in the Fire Resistance Directory for names of manufacturers.

2. Cable Tray* — Max 24 in. (610 mm) wide by max 4 in. (102 mm) deep open-ladder or solid-back cable tray with channel-shaped side rails formed of 0.10 in. (2.54 mm) thick aluminum or 0.060 in. (1.52 mm) thick galv steel and with 1-1/2 in. (38 mm) wide by 1 in. (25 mm) channel shape rungs spaced 9 in. (229 mm) OC or a 0.029 in. (0.74 mm) thick steel solid back, respectively. The annular space between the cable tray and the periphery of the opening shall be min 1 in. (25 mm) to max 4 in. (102 mm). Cable tray to be rigidly supported on both sides of floor or wall assembly.

3. Cables — Aggregate cross-sectional area of cables in cable tray to be max 40 percent of the cross-sectional area of the cable tray. Any combination of the following types and sizes of copper conductor or fiber optic cables may be used:

A. 1/C, 500 kcmil with thermoplastic insulation and PVC jacket.
B. 300 pair — No. 24 AWG cable with PVC insulation and jacket.
C. 24 fiberoptic cable with PVC subunit and jacket.
D. Three 1/C No. 12 AWG wire, insulated with polyvinyl chloride, in a nominal 3/4 in. (19 mm) flexible metal conduit.

4. Firestop System — The firestop system shall consist of the following:

A. Fill, Void or Cavity Material* — Fire blocks installed with the long dimension placed horizontally within the opening, flush with bottom of floor assembly or centered within wall opening. In concrete block walls, fire block to fill entire thickness of wall opening unless wall is solid filled. Blocks to be firmly packed and completely fill the entire width and height of opening. Either one or a combination of the block specified below may be used.

HILTI CONSTRUCTION CHEMICALS, DIV OF HILTI INC — FS 657 Fire Block or CFS-BL Firestop Block

B. Fill, Void or Cavity Material* -Sealant or Putty- Not Shown — Fill material to be forced into interstices of cables and between cables and cable trays to max extent possible on both surfaces of the penetration.

HILTI CONSTRUCTION CHEMICALS, DIV OF HILTI INC — FS-One Sealant, FS-ONE MAX Intumescent Sealant or CP618 Firestop Putty Stick.

* Indicates such products shall bear the UL or cUL Certification Mark for jurisdictions employing the UL or cUL Certification (such as Canada), respectively.

Hilti Firestop Systems

Reproduced by HILTI, Inc. Courtesy of
Underwriters Laboratories, Inc.
January 14, 2015

System No. C-AJ-4071

Classified by
Underwriters Laboratories, Inc.
to UL 1479 and CAN/ULC-S115

ANSI/UL1479 (ASTM E814)	CAN/ULC S115
F Rating — 2 Hr	F Rating — 2 Hr
T Rating — 0 Hr	FT Rating — 0 Hr
	FH Rating — 2 Hr
	FTH Rating — 0 Hr

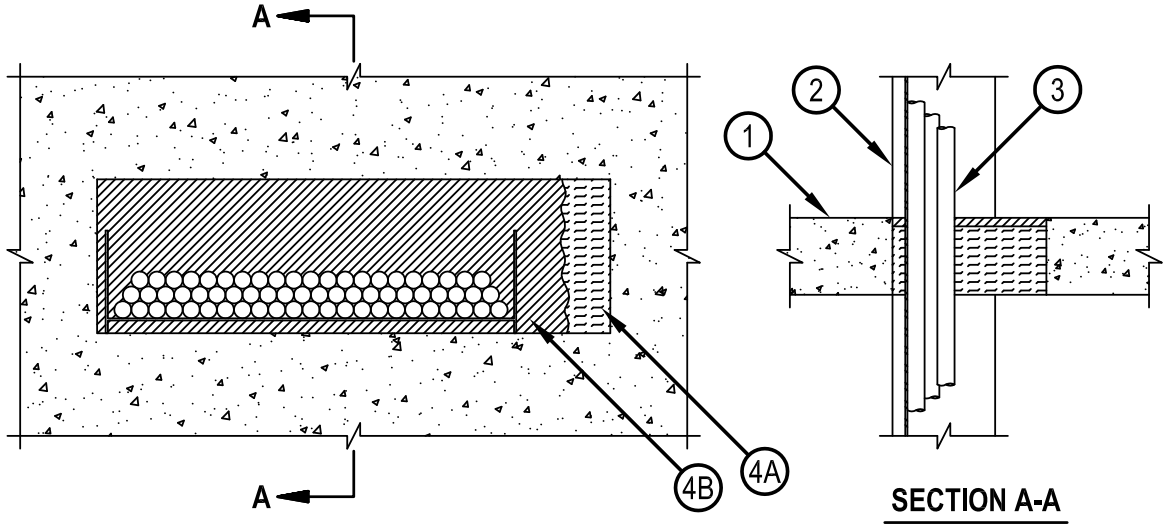

SECTION A-A

1. Floor or Wall Assembly — Min 4-1/2 in. (114 mm) thick reinforced lightweight or normal weight (100-150 pcf or 1600-2400 kg/m3) concrete floor. Min 5 in. (127 mm) thick reinforced lightweight or normal weight (100-150 pcf or 1600-2400 kg/m3) concrete wall. Wall may also be constructed of any UL Classified Concrete Blocks*. Max size of opening is 30 by 9 in. (762 by 229 mm).
   See Concrete Blocks (CAZT) category in the Fire Resistance Directory for names of manufacturers.
2. Cable Tray* — Max 24 in. (610 mm) wide by 6 in. (152 mm) deep open-ladder steel or aluminum cable tray. The annular space between cable tray and periphery of opening shall be min 0 in. (0 mm) (point contact) to max 6 in. (152 mm). Cable tray to be rigidly supported on both sides of floor or wall assembly.
3. Cables — Aggregate cross-sectional area of cable tray to be max 67 percent of the cross-sectional area of the cable tray. Any combination of the following types and sizes of cables may be used:
   A. Max 300 pair No. 24 AWG telephone cable with polyvinyl chloride (PVC) insulation and jacket.
   B. Max 500 kcmil single conductor copper or aluminum power cable with PVC jacket material.
   C. Multiple fiber optical communication cable with PVC jacket and having a max OD of 1/2 in. (12 mm).
   D. Max 3/C No. 12 AWG copper conductor steel clad cable with PVC insulation.
   E. Max 7/C No. 12 AWG copper conductor cable jacket with PVC.
4. Firestop System — The firestop system shall consist of the following:
   A. Packing Material — Min 4 in. (102 mm) thickness of 4 pcf (64 kg/m3) mineral wool batt insulation tightly packed into the opening as a permanent form. Packing material to be recessed from top surface of floor or both surfaces of wall to accommodate the required thickness of fill material.
   B. Fill, Void or Cavity Material - Sealant* — Min 1/2 in. (13 mm) thickness of fill material applied within the annulus flush with the top surface of the floor or both surfaces of the wall.
   HILTI CONSTRUCTION CHEMICALS, DIV OF HILTI INC — FS-ONE Sealant or FS-ONE MAX Intumescent Sealant.

* Indicates such products shall bear the UL or cUL Certification Mark for jurisdictions employing the UL or cUL Certification (such as Canada), respectively.

Hilti Firestop Systems

Reproduced by HILTI, Inc. Courtesy of
Underwriters Laboratories, Inc.
January 14, 2015

UL/cUL SYSTEM NO. W-J-4029

CABLE TRAY THROUGH 2-HR. CONCRETE WALL OR BLOCK WALL

F-RATING = 2-HR.
T-RATING = 0-HR.

WJ4029b.070202

FRONT VIEW

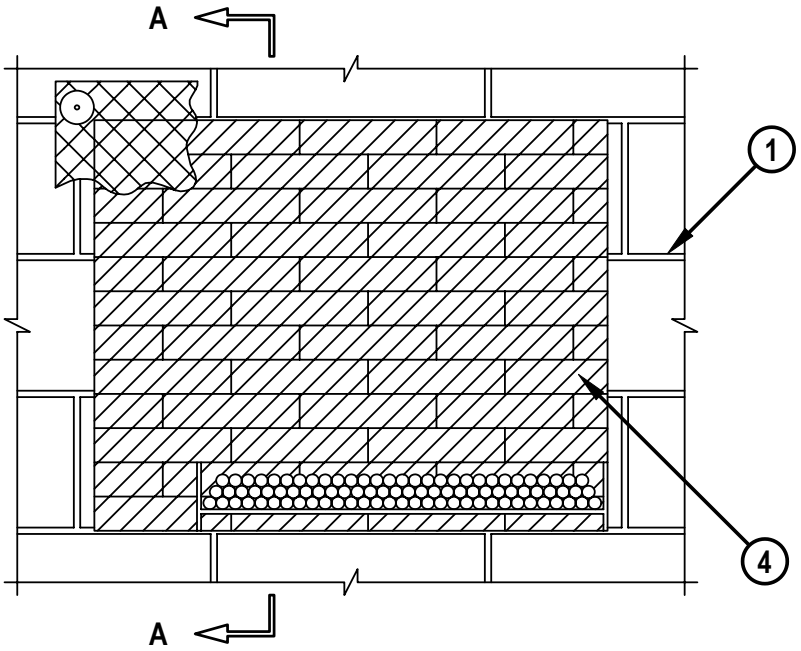

SECTION A-A

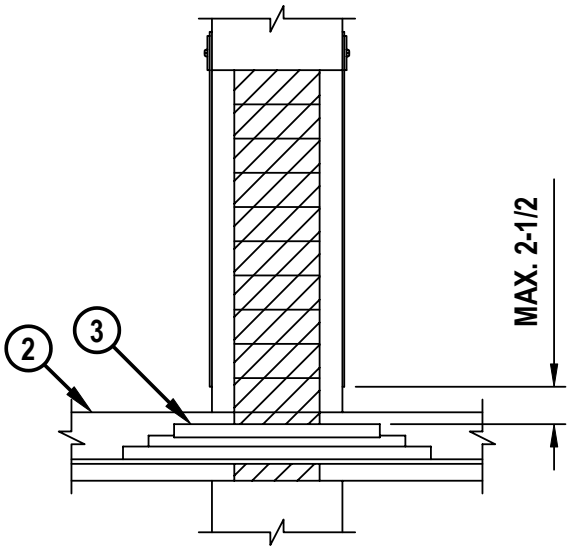

HILTI FIRESTOP SYSTEMS	HILTI, Inc. Tulsa, Oklahoma USA (918) 252-6000	Sheet: 1 of 2 Scale: 1/8" = 1" Date: July 2, 2002	Drawing No. WJ 4029b

Saving Lives through Innovation and Education

UL/cUL SYSTEM NO. W-J-4029

CABLE TRAY THROUGH 2-HR. CONCRETE WALL OR BLOCK WALL

F-RATING = 2-HR.

T-RATING = 0-HR.

WJ4029b.070202

1. CONCRETE WALL ASSEMBLY (2-HR. FIRE-RATING) :
   A. LIGHTWEIGHT OR NORMAL WEIGHT CONCRETE WALL (MIN. 5" THICK).
   B. ANY UL/ULC CLASSIFIED SOLID OR FILLED CONCRETE BLOCK WALL.
2. MAXIMUM 24" WIDE x 4" DEEP, ALUMINUM OR STEEL, OPEN LADDER OR SOLID BACK CABLE TRAY.
3. CABLES TO BE ANY COMBINATION OF THE FOLLOWING :
   A. MAXIMUM 300 PAIR NO. 24 AWG TELEPHONE CABLE.
   B. MAXIMUM 750 KCMIL SINGLE CONDUCTOR POWER CABLE.
   C. MAXIMUM 1/2" DIAMETER FIBER-OPTIC CABLE (24 FIBER).
   D. MAXIMUM 3/C NO. 12 AWG METAL-CLAD CABLE.
4. HILTI FS 657 FIRE BLOCKS (2" THICK x 8" WIDE x 5" DEEP, REFERENCE : FRONT VIEW) CENTERED WITHIN OPENING OR FLUSH WITH ONE SIDE.

NOTES : 1. MAXIMUM SIZE OF OPENING = 30" x 30".
2. ANNULAR SPACE = MINIMUM 0", MAXIMUM 26".
3. CABLES TO FILL MAXIMUM 45% OF CROSS-SECTIONAL AREA OF CABLE TRAY.
4. APPLY HILTI FS-ONE INTUMESCENT FIRESTOP SEALANT, CP 618 FIRESTOP PUTTY STICK, OR CP 620 FIRE FOAM, IN ANY VOID THAT MAY EXIST (INTO INSTERSTICES OF CABLES, BETWEEN CABLES AND CABLE TRAY, AND ANY VOIDS, TO MAXIMUM EXTENT POSSIBLE.
5. WHEN ANNULAR SPACE EXCEEDS 4", ABOVE OR BELOW THE CABLE TRAY, OR 6" BETWEEN TRAY AND SIDE OF OPENING, A NOMINAL 2" x 2" STEEL WIRE MESH (16 GA.) SHALL BE ATTACHED TO BOTH SIDES OF THE WALL WITH 1/4" DIAMETER x 1" LONG STEEL CONCRETE ANCHORS AND 1-1/2" DIA. FENDER WASHERS (SPACED MAX. 8" C/C).
6. (NOT SHOWN). AS AN ALTERNATE TO WIRE MESH, STEEL PLATE (MIN. 22 GA.) MAY BE USED. STEEL PLATE SHALL BE ATTACHED TO STEEL STRUTS (13/16" DEEP x 12 GA.) WITH 1/4" DIA. STEEL NUTS (SPACED 8" C/C). STRUT SHALL BE SECURED TO BOTH SURFACES OF THE WALL ASSEMBLY WITH 1/4" DIA. x 1" LG. STEEL CONCRETE ANCHORS WITH STEEL NUTS (SPACED MAX. 12" C/C).
7. STEEL WIRE MESH/STEEL PLATE SHALL BEGIN MAXIMUM 2-1/2" FROM THE PENETRANT AND OVERLAP MINIMUM 3" BEYOND THE PERIPHERY OF THE OPENING.

HILTI® FIRESTOP SYSTEMS

HILTI, Inc.
Tulsa, Oklahoma USA (918) 252-6000

Sheet	2 of 2
Scale	1/8" = 1"
Date	July 2, 2002

Drawing No. WJ 4029b

Saving Lives through Innovation and Education

System No. W-L-4011

Classified by Underwriters Laboratories, Inc. to UL 1479 and CAN/ULC-S115

ANSI/UL1479 (ASTM E814)	CAN/ULC S115
F Ratings — 1 and 2 Hr (See Item 1)	F Ratings — 1 and 2 Hr (See Item 1)
T Rating — 0 Hr	FT Rating — 0 Hr
L Rating At Ambient — 5 CFM/sq ft	FH Ratings — 1 and 2 Hr (See Item 1)
L Rating At 400 F — 2 CFM/sq ft	FTH Rating — 0 Hr
	L Rating At Ambient — 5 CFM/sq ft
	L Rating At 400 F — 2 CFM/sq ft

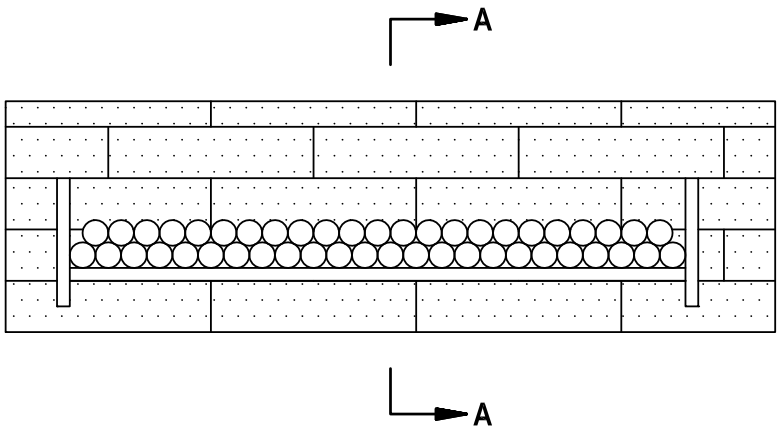

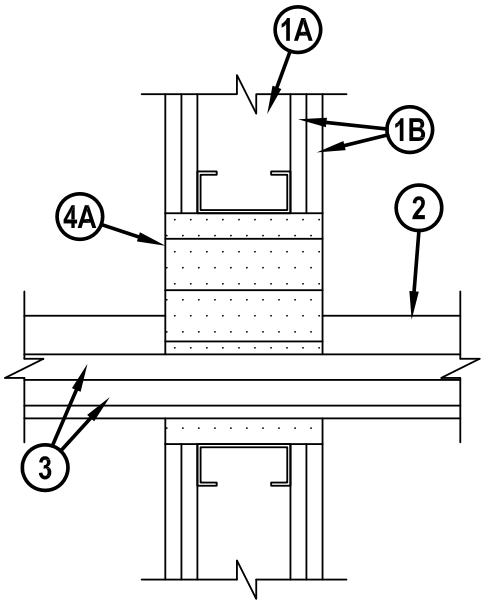

SECTION A-A

1. Wall Assembly — The 1 or 2 hr fire rated gypsum board/stud wall assembly shall be constructed of the materials and in the manner described in the individual U300, U400, V400 or W400 Series Wall and Partition Designs in the UL Fire Resistance Directory and shall include the following construction features:
   A. Studs — Wall framing may consist of either wood studs or steel channel studs. Wood studs to consist of nom 2 in. (51 mm) by 4 in. (102 mm) lumber spaced 16 in. (406 mm) OC. Steel studs to be min 2-1/2 in. (64 mm) wide and spaced max 24 in. (610 mm) OC. Additional framing member shall be installed in stud cavity containing through-penetrating item to form a rectangular box around penetrant.
   B. Gypsum Board* — 5/8 in. (16 mm) thick, 4 ft (1219 cm) wide with square or tapered edges. The gypsum board type, thickness, number of layers, fastener type and sheet orientation shall be as specified in the individual Wall and Partition Design in the UL Fire Resistance Directory. Max size of opening 9 in. (229 mm) by 30 in. (762 mm).
   The hourly F and FH Ratings of the firestop system are equal to the hourly fire rating of the wall assembly in which it is installed.
   Min finished wall thickness is 5 in. (127 mm).
2. Cable Tray* — Max 24 in. (610 mm) wide by max 6 in. (152 mm) deep open-ladder or solid-back cable tray with channel-shaped side rails formed of 0.10 in. (2.54 mm) thick aluminum or 0.060 in. (1.54 mm) thick steel and with 1-1/2 in. (38 mm) wide by 1 in. (25 mm) channel shape rungs spaced 9 in. (229 mm) OC or a 0.029 in. (0.74 mm) thick steel solid back, respectively. The annular space between the cable tray and the periphery of the opening shall be min 0 in. (point contact) to max 4 in. (102 mm). Cable tray to be rigidly supported on both sides of floor or wall assembly.

Reproduced by HILTI, Inc. Courtesy of Underwriters Laboratories, Inc.
January 23, 2015

System No. W-L-4011

3. Cables — Aggregate cross-sectional area of cables in cable tray to be max 45 percent of the cross-sectional area of the cable tray based on a max 5 in. (127 mm) cable loading depth. Any combination of the following types and sizes of copper conductor cables may be used:
   A. 1/C, 750 kcmil (or smaller) power cable with EPR insulation and PVC jacket.
   B. 300 pair — No. 24 AWG cable with PVC insulation and jacket
   C. Twenty-four fiberoptic cable with PVC subunit and jacket.
   D. Max three 1/C, No. 12 AWG wire, insulated with polyvinyl chloride, in a nom 3/4 in. (19 mm) Flexible Metal Conduit+.
4. Firestop System — The firestop system shall consist of the following:
   A. Fill, Void or Cavity Material* - Fire Blocks — For walls incorporating max 3-5/8 in. (92 mm) steel studs or max 2 in. (51 mm) by 4 in. (102 mm) wood studs, fire block installed with 5 in. (127 mm) dimension projecting through and centered in opening. For walls constructed of larger steel or wood studs, fire block installed with long dimension passing through and centered in opening. Blocks may or may not be cut flush with both surfaces of wall. When multiple layers of gypsum board are used, blocks may be recessed 1/2 in. (13 mm) from surface of wall. Blocks firmly packed within opening. Either one or a combination of the block types specified below may be used.
   HILTI CONSTRUCTION CHEMICALS, DIV OF HILTI INC — FS-657 Fire Block or CFS-BL Firestop Block
   B. Fill, Void or Cavity Material* - Sealant or Putty (Not shown) — Fill material to be forced into interstices of cables and between cables and cable trays to max extent possible on both surfaces of the penetration.
   HILTI CONSTRUCTION CHEMICALS, DIV OF HILTI INC — FS-ONE Sealant, FS-ONE MAX Intumescent Sealant or CP618 Firestop Putty Stick (Note: L Ratings apply only when FS-One Sealant is used)

+Bearing the UL Listing Mark

* Indicates such products shall bear the UL or cUL Certification Mark for jurisdictions employing the UL or cUL Certification (such as Canada), respectively.

Reproduced by HILTI, Inc. Courtesy of
Underwriters Laboratories, Inc.
January 23, 2015

System No. W-L-4038

Classified by Underwriters Laboratories, Inc. to UL 1479 and CAN/ULC-S115

ANSI/UL1479 (ASTM E814)	CAN/ULC S115
F Ratings — 1 and 2 Hr (See Item 1)	F Ratings — 1 and 2 Hr (See Item 1)
T Rating — 0 Hr	FT Rating — 0 Hr
	FH Ratings — 1 and 2 Hr (See Item 1)
	FTH Rating — 0 Hr

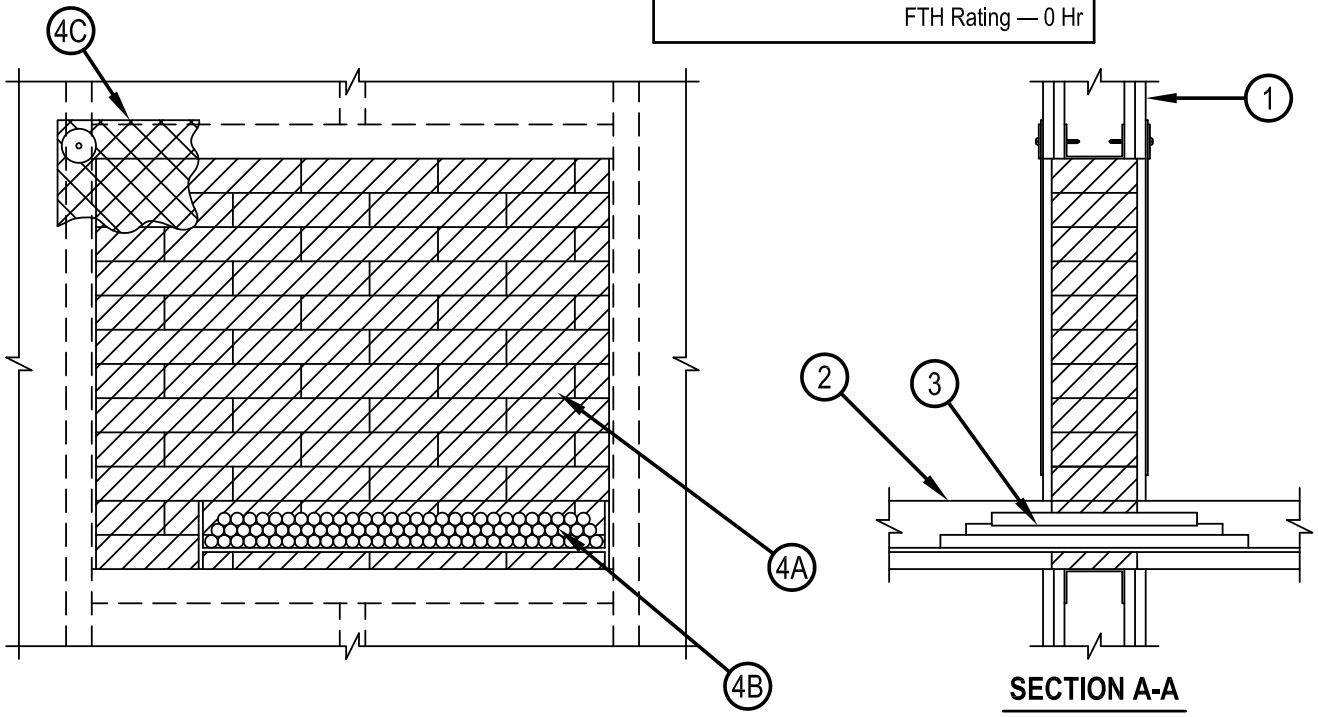

1. Wall Assembly — The 1 or 2 hr fire-rated gypsum board/stud wall assembly shall be constructed of the materials and in the manner specified in the individual U300, U400, V400 or W400 Series Wall and Partition Designs in the Fire Resistance Directory and shall include the following construction features:
   A. Studs — Wall framing shall consist of either wood studs or channel shaped steel studs. Wood studs to consist of 2 in. (51 mm) by 4 in. (102 mm) lumber spaced 16 in. (406 mm) OC. Steel studs to be min 2-1/2 (64 mm) wide, fabricated from min 25 MSG galvanized steel, spaced max 24 in. (610 mm) OC. Additional framing members shall be used to completely frame around opening.
   B. Gypsum Board* — Nom 5/8 in. (16 mm) thick with square or tapered edges. The gypsum board type, number of layers and sheet orientation shall be as specified in the individual Wall and Partition Design Number. Max area of opening is 900 sq in. (5806 cm2) with max dimension of 30 in. (762 mm).
   The hourly F and FH Ratings of the firestop system are equal to the hourly fire rating of the wall assembly in which it is installed.
2. Cable Tray* — Max 24 in. (610 mm) wide by 4 in. (102 mm) deep open-ladder or solid-back cable tray with channel-shaped side rails formed of 0.10 in. (2.54 mm) thick aluminum or 0.060 in. (1.53 mm) thick steel and with 1 in. wide by 1 in. deep tubular channel-shaped rungs spaced 9 in. (229 mm) OC or a 0.029 in. (0.74 mm) thick steel solid back, respectively. For steel stud walls, the annular space between the periphery of the opening shall be min 0 in. (point contact) to max 26 in. (660 mm). For wood stud walls, the annular space between the periphery of the opening shall be min 1 in. (25 mm) to max 26 in. (660 mm). Cable tray to be rigidly supported on both sides of wall assembly.
3. Cables — Aggregate cross-sectional area of cables in cable tray to be max 45 percent of the cross-sectional area of the cable tray based on a max 3 in. (76 mm) cable loading depth within the cable tray. Any combination of the following types and sizes of copper conductor cables may be used:
   A. 1/C, 750 kcmil (or smaller) power cable with EPR polyvinyl chloride (PVC) insulation and jacket.
   B 300 pair - No. 24 AWG telephone cable with PVC insulation and jacket.
   C. 24 fiber optic cable with PVC outer and subunit jacket.
   D. 3/C No. 12 AWG copper conductor Metal Clad+ cable with PVC insulation.

Reproduced by HILTI, Inc. Courtesy of Underwriters Laboratories, Inc.
January 23, 2015

System No. W-L-4038

4. Firestop System — The firestop system shall consist of the following:

A. Fill, Void or Cavity Material*-Fire Blocks — For walls incorporating max 3-5/8 in. (92 mm) steel studs or max 2 in. (51 mm) by 4 in. (102 mm) wood studs, fire block installed with 5 in. (127 mm) dimension projecting through and centered in opening. For walls constructed of larger steel or wood studs, fire block installed with long dimension passing through and centered in opening. Blocks may or may not be cut flush with both surfaces of wall. When multiple layers of gypsum board are, blocks may be recessed 1/2 in. (13 mm) from surface of wall Blocks to be firmly packed and completely fill the entire opening. Either one or a combination of the block types specified below may be used.

HILTI CONSTRUCTION CHEMICALS, DIV OF HILTI INC — FS 657 Fire Block or CFS-BL Firestop Block

B. Fill, Void or Cavity Material* — Fill material to be forced into interstices of cables, between cables and cable tray and in obvious openings between blocks and between blocks and the periphery of the opening to the max extent possible on both surfaces of wall.

HILTI CONSTRUCTION CHEMICALS, DIV OF HILTI INC — FS-ONE Sealant, FS-ONE MAX Intumescent Sealant, CP618 Firestop Putty Stick or CP 620 Fire Foam

C. Wire Mesh — When the annular space exceeds 4 in. (102 mm) to the periphery above or below the cable tray, or 6 in. (152 mm) between tray and the side of opening, a nom 2 in. (51 mm) by 2 in. (51 mm) wire fencing shall be used to keep the blocks in place. The wire fencing shall be fabricated from min No. 16 SWG (0.060 in.) (1.53 mm) galv steel wire. The wire mesh shall begin max 2-1/2 in. (64 mm) above the cable tray and overlap min 3 in. (76 mm) beyond the periphery of the opening. Wire fencing secured to both surfaces of the wall assembly by means of 1/4 in. (6 mm) diam long steel hollow wall anchors and 1/4 in. (6 mm) by 1-1/2 in. (38 mm) diam fender washers spaced max 8 in. (203 mm) OC, or attached to steel studs with steel screws and 1-7/16 in. (37 mm) diam steel washers spaced max 6 in. (152 mm) OC.

C1. Steel Plate/Steel Strut System (Not Shown) — As an alternative to wire mesh, when the annular space exceeds 4 in. (102 mm) to the periphery above or below the cable tray, or 6 in. (152 mm) between tray and the side of opening, a min 22 MSG steel plate shall be used to keep the blocks in place. The steel plate shall be attached to nom 13/16 in. (21 mm) deep, 12 MSG steel struts with 1/4 in. (6 mm) diam strut nuts, spaced 8 in. (203 mm) OC. The plate shall begin max 2-1/2 in. (64 mm) above or to the sides of the cable tray and overlap min 3 in. (76 mm) beyond the periphery of the opening. The struts shall be secured to both surfaces of the wall assembly by means of 1/4 in. (6 mm) diam long steel hollow wall anchors or attached to steel studs with steel screws and washers spaced max 12 in. (305 mm) OC.

* Indicates such products shall bear the UL or cUL Certification Mark for jurisdictions employing the UL or cUL Certification (such as Canada), respectively.

+Bearing the UL Listing Mark

System No. WL-4060

Classified by Underwriters Laboratories, Inc. to UL 1479 and CAN/ULC-S115

ANSI/UL1479 (ASTM E814)	CAN/ULC S115
F Rating — 1 and 2 Hr (See Item 1)	F Rating — 1 and 2 Hr (See Item 1)
T Rating — 1/2 Hr	FT Rating — 1/2 Hr
	FH Rating — 1 and 2 Hr (See Item 1)
	FTH Rating — 1/2 Hr

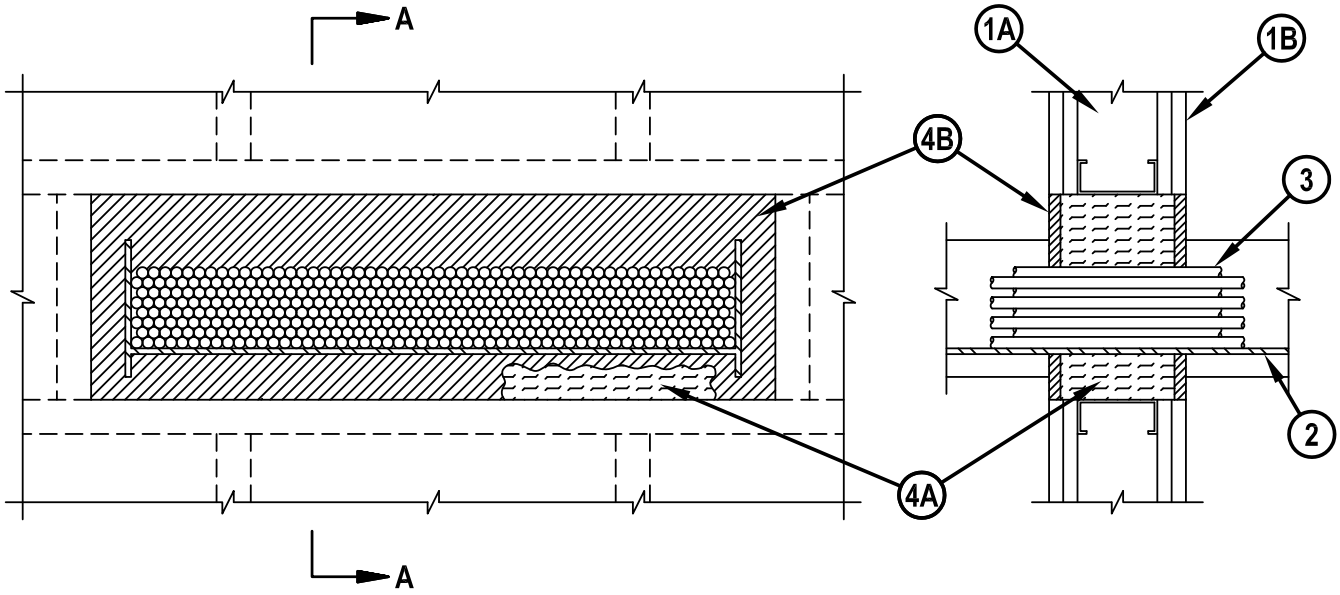

SECTION A-A

1. Wall Assembly — The 1 or 2 hr fire-rated gypsum board/stud wall assembly shall be constructed of the materials and in the manner specified in the individual U300, U400, V400 or W400 Series Wall and Partition Designs in the UL Fire Resistance Directory and shall include the following construction features:
   A. Studs — Wall framing may consist of either wood studs or channel shaped steel studs. Wood studs to consist of nom 2 by 4 in. (51 by 102 mm) lumber spaced max 16 in. (406 mm) OC. Steel studs to be min 3-1/2 in. (89 mm) wide and spaced max 24 in. (610 mm) OC. Additional framing members shall be installed in stud cavity to form a rectangular box around the penetrants.
   B. Gypsum Board* — 5/8 in. (16 mm) thick with square or tapered edges. The gypsum board type, thickness, number of layers, fastener type and sheet orientation shall be as specified in the individual U300, U400 or V400 Wall and Partition Design. If the cable tray is installed in a wood stud/gypsum board assembly, the max area of opening is 130 in.2 (842 cm2) with max dimension of 14-1/2 in. (368 mm). If the cable tray is installed in a steel stud/gypsum board assembly, max area of opening is 270 in2. (1742 cm2) with max dimension of 30 in. (762 mm) wide.
   The hourly F, FH Ratings of the firestop system are equal to the hourly fire rating of the wall assembly in which it is installed.

Reproduced by HILTI, Inc. Courtesy of Underwriters Laboratories, Inc.
January 23, 2015

System No. WL-4060

2. Cable Tray — For wall assemblies consisting of steel studs, max 24 in. (610 mm) wide by max 6 in. (152 mm) deep open ladder cable tray with channel-shaped side rails formed of min 0.060 in. (1.5 mm) thick galv steel or aluminum with nom 1 in. (25 mm) diam rungs spaced 9 in. (229 mm) OC. For wall assemblies consisting of wood studs, max 12 in. (305 mm) wide by max 6 in. (152 mm) deep open ladder cable tray with channel-shaped side rails formed of min 0.060 in. (1.5 mm) thick galv steel or aluminum with nom 1 in. (25 mm) diam rungs spaced 9 in. (229 mm) OC. The annular space between the cable tray and the periphery of the opening will be min 0 in. (0 mm, point contact) to max 3 in. (76 mm). Cable tray to be rigidly supported on both sides of wall assembly.
3. Cables — Aggregate cross-sectional area of cable tray to be max 40 percent of the cross-sectional area of the cable tray based on a max 5 in. (127 mm) loading depth. Any combination of the following types and sizes of cables may be used:
   A. Max 300 pair No. 24 AWG telephone cable with polyvinyl chloride (PVC) insulation and jacket.
   B. Max 750 kcmil single conductor copper power cable with PVC jacket material.
   C. Multiple fiber optical communication cable with PVC jacket and having a max OD of 1/2 in. (12 mm).
   D. Through Penetrating Product* — Max 3/C No. 12 AWG (or smaller) Metal-Clad Cable+ currently Classified under the Through Penetrating Product category.
   See Through Penetrating Product (XHLY) category in the Fire Resistance Directory for names of manufacturers.
4. Firestop System — The firestop system shall consist of the following:
   A. Packing Material — In 2 hr fire rated wall assemblies, min 5 in. (127 mm) thickness of min 4 pcf (64 kg/m3) mineral wool batt insulation firmly packed into opening as a permanent form. In 1 hr fire rated wall assemblies, min 3-3/4 in. (95 mm) thickness of min 4 pcf (64 kg/m3) mineral wool batt insulation firmly packed into opening as a permanent form. Packing material recessed from both surfaces of the wall to accommodate the required thickness of fill material.
   B. Fill, Void or Cavity Material* — Sealant — Min 1/2 in. (13 mm) thickness of fill material applied within annulus, flush with both surfaces of wall. A min 1/2 in. (13 mm) diam bead of fill material shall be applied at the gypsum board/through penetrant interface at point contact location on both surfaces of wall.
   HILTI CONSTRUCTION CHEMICALS, DIV OF HILTI INC — FS-ONE Sealant or FS-ONE MAX Intumescent Sealant

* Indicates such products shall bear the UL or cUL Certification Mark for jurisdictions employing the UL or cUL Certification (such as Canada), respectively.

+ Bearing the UL Listing Mark

Reproduced by HILTI, Inc. Courtesy of
Underwriters Laboratories, Inc.
January 23, 2015

Customer Hotline: Hong Kong 8228 8118, Macau 00800 8228 8118 Email: hksales@hilti.com

Classified by
Underwriters Laboratories, Inc.
to UL 1479 and CAN/ULC-S115

System No. C-AJ-5048

ANSI/UL1479 (ASTM E814)	CAN/ULC S115
F Rating — 2 Hr	F Rating — 2 Hr
T Rating — 2 Hr	FT Rating — 2 Hr
L Rating At Ambient — 4 CFM/sq ft	FH Rating — 2 Hr
L Rating At 400 F — Less Than 1 CFM/sq ft	FTH Rating — 2 Hr
W Rating — Class 1 (See Items 3A and 5)	L Rating At Ambient — 4 CFM/sq ft
	L Rating At 400 F — Less Than 1 CFM/sq ft

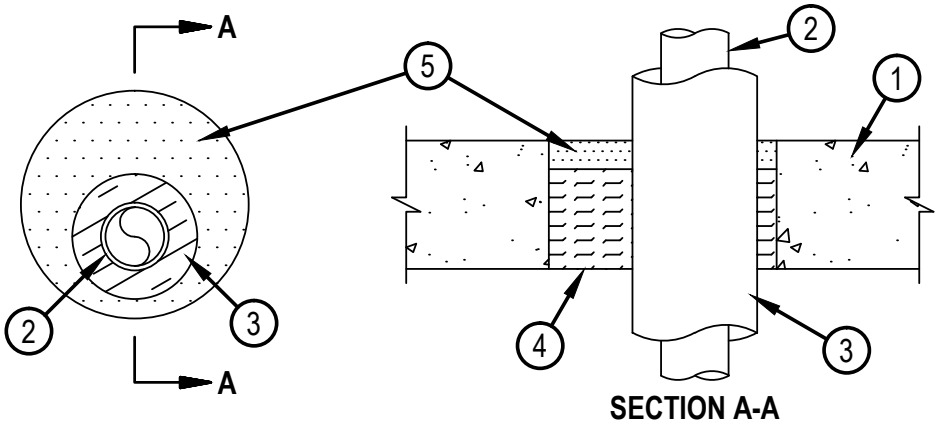

SECTION A-A

1. Floor or Wall Assembly — Min 4-1/2 in. (114 mm) thick reinforced lightweight or normal weight (100-150 pcf or 1600-2400 kg/m3) concrete floor or min 5 in. (127 mm) thick reinforced lightweight or normal weight concrete wall. Wall may also be constructed of any UL Classified Concrete Blocks*. Max diam of opening is 8 in. (203 mm).
   See Concrete Blocks (CAZT) category in the Fire Resistance Directory for names of manufacturers.
2. Steel Pipe — One 2 in. (51 mm) diam (or smaller) Schedule 40 (or heavier) steel pipe installed either concentrically or eccentrically within the firestop system. Pipe to be rigidly supported on both sides of floor or wall assembly.

Reproduced by HILTI, Inc. Courtesy of
Underwriters Laboratories, Inc.
January 14, 2015

System No. C-AJ-5048

3. Pipe Covering* — Nom 1 in. (25 mm) thick hollow cylindrical heavy density (min 3.5 pcf) glass fiber units jacketed on the outside with an all service jacket. Longitudinal joints sealed with metal fasteners or factory-applied self-sealing lap tape. Transverse joints secured with metal fasteners or with butt tape supplied with the product. The annular space shall be min 11/16 to max 3-1/16 in. (17.5 to 78 mm).
   See Pipe and Equipment Covering — Materials (BRGU) category in the Building Materials Directory for names of manufacturers. Any pipe covering material meeting the above specifications and bearing the UL Classification Marking with a Flame Spread Index of 25 or less and a Smoke Developed Index of 50 or less may be used.

3A. PVC Jacket+ — For W Rating, an additional PVC jacketing, supplied in sheet form, shall be tightly wrapped around the all service jacket on the pipe covering with the longitudinal seam continuously sealed using the adhesive supplied with the jacket. The jacket is to be nom 48 in. (1219 mm) wide by nom 20 or 30 mil (0.5 or 0.8 mm) thick. The jacket shall be installed at a point 36 in. (914 mm) to 40 in. (1016 mm) above the top surface of the floor assembly and shall extend downward into and/or through the opening.
   See Plastics (QMFZ2) category in the Plastics Recognized Component Directory for names of manufacturers. Any Recognized Component tube insulation material meeting the above specifications and having a UL 94 Flammability Classification of 94-5VA may be used.

4. Packing Material — Min 4 in. (102 mm) thickness of min 4 pcf (64 kg/m3) mineral wool batt insulation firmly packed into opening as a permanent form. Packing material to be recessed from top surface of floor or from both surfaces of wall to accommodate the required thickness of fill material.

5. Fill, Void or Cavity Material* — Sealant — Min 1/2 in. (13 mm) thickness of fill material applied within the annulus, flush with top surface of floor or with both surfaces of wall. W Rating applies only when CP601S, CFS-S SIL GG, CFS-S SIL SL (floors only) or CP604 sealant is used.
   HILTI CONSTRUCTION CHEMICALS, DIV OF HILTI INC — CP601S, CP604, CP606, CFS-S SIL GG, CFS-S SIL SL (floors only), FS-One Sealant or FS-ONE MAX Intumescent Sealant

(Note: L Ratings apply only when FS-ONE Sealant is used.)

* Indicates such products shall bear the UL or cUL Certification Mark for jurisdictions employing the UL or cUL Certification (such as Canada), respectively.

+Bearing the UL Recognized Component Marking

Reproduced by HILTI, Inc. Courtesy of
Underwriters Laboratories, Inc.
January 14, 2015

System No. C-AJ-5061

Classified by Underwriters Laboratories, Inc. to UL 1479 and CAN/ULC-S115

ANSI/UL1479 (ASTM E814)	CAN/ULC S115
F Rating — 3 Hr	F Rating — 3 Hr
T Rating — 1/2Hr	FT Rating — 1/2 Hr
	FH Rating — 3 Hr
	FTH Rating — 1/2 Hr

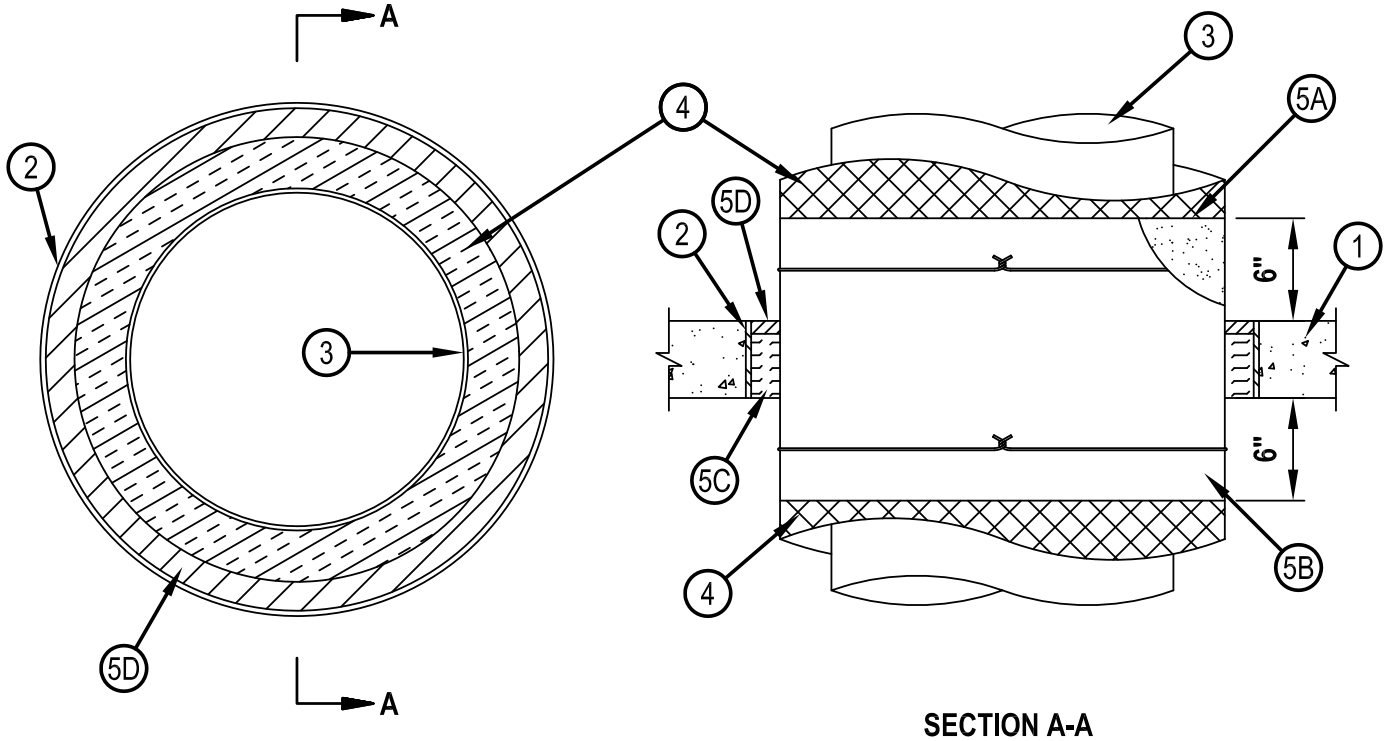

SECTION A-A

1. Floor or Wall Assembly — Min 4-1/2 in. (114 mm) thick reinforced lightweight or normal weight (100-150 pcf or 1600-2400 kg/m3) concrete. Wall may also be constructed of any UL Classified Concrete Blocks*. Max diam of opening is 36-3/4 in. (933 mm).
   See Concrete Blocks (CAZT) category in the Fire Resistance Directory for names of manufacturers.
2. Metallic Sleeve — (Optional) — Nom 30 in. (762 mm) diam (or smaller) Schedule 10 (or heavier) steel pipe, conduit or EMT cast or grouted into floor or wall assembly, flush with floor or wall surfaces.
3. Through Penetrants — One metallic pipe or tubing to be either concentrically or eccentrically within the firestop system. Pipe or tube to be rigidly supported on both sides of floor or wall assembly. The following types and sizes of metallic pipes or tubing may be used:
   A. Steel Pipe — Nom 20 in. (508 mm) diam (or smaller) Schedule 10 (or heavier) steel pipe.
   B. Iron Pipe — Nom 20 in. (508 mm) diam (or smaller) cast or ductile iron pipe.
   C. Copper Tubing — Nom 6 in. (152 mm) diam (or smaller) Type L (or heavier) copper tubing.
   D. Copper Pipe — Nom 6 in. (152 mm) diam (or smaller) Regular (or heavier) copper pipe.
4. Pipe Covering — Max 3 in. (76 mm) thick hollow cylindrical heavy density (min 3.5 pcf or 56 kg/m3) glass fiber units jacketed on the outside with an all service jacket. Longitudinal joints sealed with metal fasteners or factory-applied self-sealing lap tape. Transverse joints secured with metal fasteners or with butt tape supplied with the product. Pipe covering to terminate 6 in. (152 mm)from each side of floor or wall assembly.
   See Pipe and Equipment Covering — Materials (BRGU) category in the Building Materials Directory for names of manufacturers. Any pipe covering material meeting the above specifications and bearing the UL Classification Marking with a Flame Spread Index of 25 or less and a Smoke Developed Index of 50 or less may be used.

Reproduced by HILTI, Inc. Courtesy of
Underwriters Laboratories, Inc.
January 13, 2015

System No. C-AJ-5061

5. Firestop System — The firestop system shall consist of the following:

A. Pipe Covering Materials* — Nom 3 in. (76 mm) thick unfaced mineral fiber pipe insulation having a nom density of 5 pcf (80 kg/m3) (or heavier) sized to the outside diam of pipe or tube and extending min 6 in. (152 mm) beyond each surface of floor or wall. Pipe insulation secured with min 18 AWG steel wire 3 in. (76 mm) beyond each surface of floor or wall. The annular space shall be min 1/4 in. (6 mm) to max of 3 in. (76 mm), or when steel sleeve is used, min 1 in. (25 mm) to max 2-1/4 in. (57 mm).

See Pipe and Equipment Covering — Materials (BRGU) category in the Building Materials Directory for names of manufacturers. Any pipe covering material meeting the above specification and bearing the UL Classification Marking with a Flame Spread Index of 25 or less and a Smoke Developed Index of 50 or less may be used.

B. Sheathing Material* — All service jacket material shall be wrapped around the outer circumference of the pipe covering material (Item 5A) with kraft facing exposed. Longitudinal joints sealed with metal fasteners.

See Sheathing Material (BVDV) category in the Building Materials Directory for names of manufacturers. Any sheathing material meeting the above specifications and bearing the UL Classification Marking with a Flame Spread Index of 25 or less and a Smoke Developed Index of 50 or less may be used.

C. Packing Material — Min 3 in. (76 mm) thickness of min 4 pcf (64 kg/m3) mineral wool batt insulation firmly packed into opening as a permanent form. Packing material to be recessed from top surface of floor or from both surfaces of wall as required to accommodate the required thickness of fill material.

D. Fill, Void or Cavity Material* — Sealant — Min 3/4 in. (19 mm) thickness of fill material applied within the annulus, flush with top surface of floor or with both surfaces of wall.

HILTI CONSTRUCTION CHEMICALS, DIV OF HILTI INC — FS-One Sealant or FS-ONE MAX Intumescent Sealant

* Indicates such products shall bear the UL or cUL Certification Mark for jurisdictions employing the UL or cUL Certification (such as Canada), respectively.

Reproduced by HILTI, Inc. Courtesy of
Underwriters Laboratories, Inc.
January 13, 2015

System No. C-AJ-5091

Classified by
Underwriters Laboratories, Inc.
to UL 1479 and CAN/ULC-S115

ANSI/UL1479 (ASTM E814)	CAN/ULC S115
F Rating — 2 Hr	F Rating — 2 Hr
T Ratings — 0 and 1 Hr (See Items 2 and 4)	FT Ratings — 0 and 1 Hr (See Items 2 and 4)
L Rating At Ambient — 4 CFM/sq ft	FH Rating — 2 Hr
L Rating At 400 F — Less Than 1 CFM/sq ft	FTH Ratings — 0 and 1 Hr (See Items 2 and 4)
	L Rating At Ambient —4 CFM/sq ft
	L Rating At 400 F —Less Than 1 CFM/sq ft

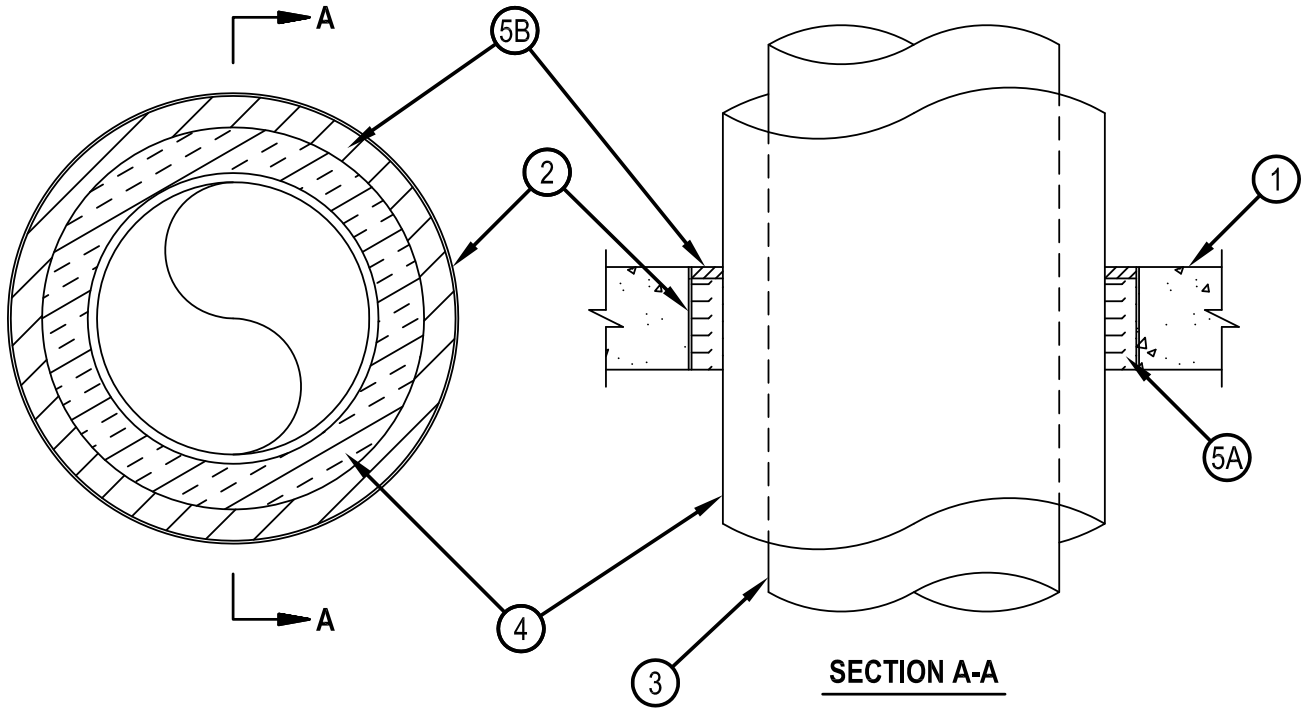

SECTION A-A

1. Floor or Wall Assembly — Min 4-1/2 in. (114 mm) thick reinforced lightweight or normal weight (100-150 pcf or 1600-2400 kg/m³) concrete. Wall may also be constructed of any UL Classified Concrete Blocks*. Max diam of opening is 29 in. (737 mm).
   See Concrete Blocks (CAZT) category in the Fire Resistance directory for names of manufacturers.
2. Metallic Sleeve — (Optional) — Nom 30 in. (762 mm) diam (or smaller) Schedule 10 (or heavier) steel pipe sleeve cast or grouted into floor or wall assembly, flush with floor or wall surfaces or extending a max of 3 in. (76 mm) above floor or beyond both surfaces of wall. If the steel sleeve extends beyond the top surface of the floor or both surfaces of the wall, the T Rating of the firestop system is 0 hr.

2A. Sheet Metal Sleeve — (Optional) - Max 6 in. (152 mm) diam, min 26 ga galv steel provided with a 26 ga galv steel square flange spot welded to the sleeve at approximately mid- height, or flush with bottom of sleeve in floors, and sized to be a min of 2 in. (51 mm) larger than the sleeve diam. The sleeve is to be cast in place flush with bottom surface of floor and may extend a max of 1 in. (25 mm) above the top surface of the floor.

2B. Sheet Metal Sleeve — (Optional) - Max 12 in. (305 mm) diam, min 24 ga galv steel provided with a 24 ga galv steel square flange spot welded to the sleeve at approximately mid- height, or flush with bottom of sleeve in floors, and sized to be a min of 2 in. (51 mm) larger than the sleeve diam. The sleeve is to be cast in place flush with bottom surface of floor and may extend a max of 1 in. (25 mm) above the top surface of the floor.

Reproduced by HILTI, Inc. Courtesy of
Underwriters Laboratories, Inc.
January 13, 2015

System No. C-AJ-5091

3. Through Penetrants — One metallic pipe or tubing to be installed either concentrically or eccentrically within the firestop system. Pipe or tubing to be rigidly supported on both sides of floor or wall assembly. The following types and sizes of metallic pipes or tubing may be used:
   A. Steel Pipe — Nom 12 in. (305 mm) diam (or smaller) Schedule 10 (or heavier) steel pipe.
   B. Iron Pipe — Nom 12 in. (305 mm) diam (or smaller) cast or ductile iron pipe.
   C. Copper Pipe — Nom 6 in. (152 mm) diam (or smaller) Regular (or heavier) copper pipe.
   D. Copper Tubing — Nom 6 in. (152 mm) diam (or smaller) Type L (or heavier) copper tubing.
4. Pipe Covering — Min 1/2 in. (13 mm) to max 2 in. (51 mm) thick hollow cylindrical heavy density (min 3.5 pcf or 56 kg/m³) glass fiber units jacketed on the outside with an all-service jacket. Longitudinal joints sealed with metal fasteners or factory-applied, self-sealing lap tape. Transverse joints secured with metal fasteners or with butt tape supplied with the product. The annular space between the insulated pipe and the edge of the periphery of the opening shall be min 1/2 in. (13 mm) to max 12 in. (305 mm). When thickness of pipe covering is less than 2 in. (51 mm), the T Rating for the firestop system is 0 hr.
   See Pipe Equipment Covering — Materials — (BRGU) category in the Building Materials Directory for names of manufacturers. Any pipe covering material meeting the above specifications and bearing the UL Classification Marking with a Flame Spread Index of 25 or less and a Smoke Developed Index of 50 or less may be used.

4A. Pipe Covering — (Not Shown) — As an alternate to Item 4, max 2 in. (51 mm) thick cylindrical calcium silicate (min 14 pcf or 224 kg/m³) units sized to the outside diam of the pipe or tube may be used. Pipe insulation secured with stainless steel bands or min 18 AWG stainless steel wire spaced max 12 in. (305 mm) OC. The annular space shall be min 1/2 in. (13 mm) to max 12 in. (305 mm).

5. Firestop System — The firestop system shall consist of the following:
   A. Packing Material — Min 4 in. (102 mm) thickness of min 4 pcf (64 kg/m³) mineral wool batt insulation firmly packed into opening as a permanent form. Packing material to be recessed from top surface of floor or from both surfaces of wall as required to accommodate the required thickness of fill material.
   B. Fill, Void or Cavity Material* — Sealant — Min 1/2 in. (13 mm) thickness of fill material applied within the annulus, flush with top surface of floor or with both surfaces of wall.
   HILTI CONSTRUCTION CHEMICALS, DIV OF HILTI INC — FS-One Sealant or FS-ONE MAX Intumescent Sealant

* Indicates such products shall bear the UL or cUL Certification Mark for jurisdictions employing the UL or cUL Certification (such as Canada), respectively.

Reproduced by HILTI, Inc. Courtesy of
Underwriters Laboratories, Inc.
January 13, 2015

System No. C-AJ-5198

Classified by Underwriters Laboratories, Inc. to UL 1479 and CAN/ULC-S115

ANSI/UL1479 (ASTM E814)	CAN/ULC S115
F Rating — 2 Hr	F Rating — 2 Hr
T Ratings — 0 and 1/2 Hr (See Item 3)	FT Ratings — 0 and 1/2 Hr (See Item 3)
	FH Rating — 2 Hr
	FTH Ratings — 0 and 1/2 Hr (See Item 3)

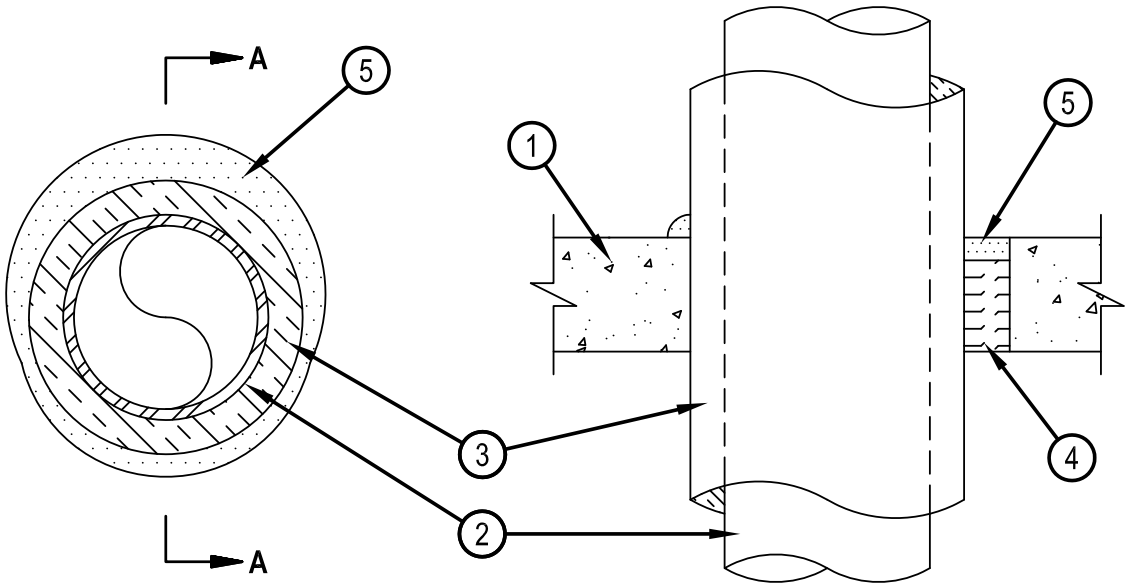

SECTION A-A

1. Floor or Wall Assembly — Min 2-1/2 in. (64 mm) thick reinforced lightweight or normal weight (100-150 pcf or 1600-2400 kg/m3) concrete or 3 in. (76 mm) thick reinforced lightweight or normal weight concrete wall. Wall may also be constructed of any UL Classified Concrete Blocks*. Max diam of opening is 7 in. (178 mm).
   See Concrete Blocks (CAZT) category in the Fire Resistance Directory for names of manufacturers.
2. Through Penetrants — One metallic pipe, conduit or tubing to be installed within the firestop device. Pipe, conduit or tubing to be rigidly supported on both sides of floor or wall assembly. The following types of pipe, conduit or tubing may be used.
   Steel Pipe —Nom 4 in. (102 mm) diam (or smaller) Schedule 10 (or heavier) steel pipe.
   Cooper Tubing —Nom 4 in. (102 mm) diam (or smaller) Type L (or heavier) copper tubing.
   Copper Pipe —Nom 4 in. (102 mm) diam (or smaller) Regular (or heavier) copper pipe.
3. Tube Insulation —Plastics+ — Min 1/2 in. (13 mm) to max 3/4 in. (19 mm) thick acrylonitrile butadiene/polyvinyl chloride (AB/PVC) flexible foam furnished in the form of tubing. The annular space shall be min 0 in. (point contact) to max 1-3/8 in. (35 mm). When thickness of tube insulation is less than 3/4 in. (19 mm), the T Rating for the firestop system is 0 hr.
   See Plastics+ (QMFZ2) Category in the Plastics Recognized Component Directory for names of manufacturers. Any Recognized Component tube insulation material meeting the above specifications and having a UL94 Flammability Classification of 94-5VA may be used.
4. Packing Material — Min 2 in. (51 mm) thickness of min 4 pcf (64 kg/m3) mineral wool batt insulation firmly packed into opening as a permanent form. Packing material to be recessed from top surface of floor or both surfaces of wall as required to accommodate the required thickness of fill material.
5. Fill, Void or Cavity Material*—Sealant — Min 1/2 in. (13 mm) thickness of fill material applied within the annulus, flush with the top surface of floor or both surfaces of wall. At point contact, a min 1/2 in. (13 mm) bead of fill material shall be applied at the concrete/insulated pipe interface on top surface of floor or both surfaces of wall.
   HILTI CONSTRUCTION CHEMICALS, DIV OF HILTI INC — FS-ONE Sealant or FS-ONE MAX Intumescent Sealant

* Indicates such products shall bear the UL or cUL Certification Mark for jurisdictions employing the UL or cUL Certification (such as Canada), respectively.

Hilti Firestop Systems

Reproduced by HILTI, Inc. Courtesy of Underwriters Laboratories, Inc.
January 13, 2015

Classified by Underwriters Laboratories, Inc. to UL 1479 and CAN/ULC-S115

System No. C-AJ-5277

ANSI/UL1479 (ASTM E814)	CAN/ULC S115
F Rating — 2 Hr	F Rating — 2 Hr
T Rating — 0 Hr	FT Rating — 0 Hr
	FH Rating — 2 Hr
	FTH Rating — 0 Hr

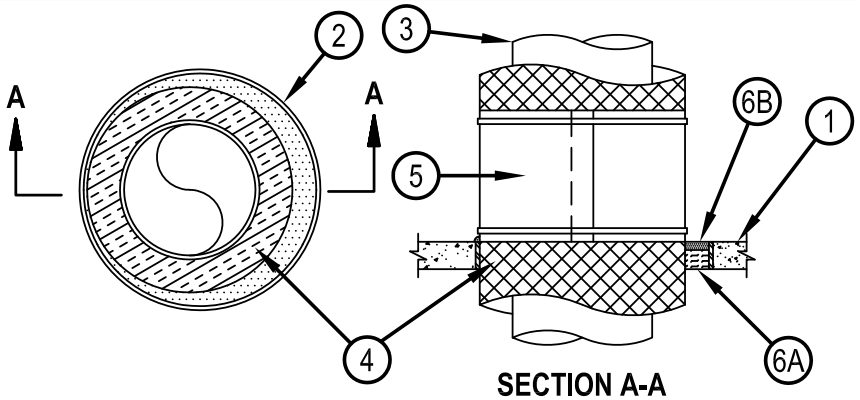

SECTION A-A

1. Floor or Wall Assembly — Min 2-1/2 in. (64 mm) thick reinforced lightweight or normal weight (100-150 pcf or 1600-2400 kg/m3) concrete. Wall may also be constructed of any UL Classified Concrete Blocks*. Max diam of opening is 20-5/8 in. (524 mm).
   See Concrete Blocks (CAZT) category in the Fire Resistance Directory for names of manufacturers.
2. Metallic Sleeve (Optional) — Nom 20 in. (508 mm) diam (or smaller) Schedule 40 steel pipe cast or grouted into floor or wall assembly, flush with floor or wall surfaces.
3. Through Penetrants — One metallic pipe or tubing to be positioned within the firestop system. Pipe or tubing to be rigidly supported on both sides of floor or wall assembly. The following types and sizes of metallic pipes or tubing may be used:
   A. Steel Pipe — Nom 12 in. (305 mm) diam (or smaller) Schedule 10 (or heavier) steel pipe.
   B. Copper Tubing — Nom 6 in. (152 mm) diam (or smaller) Type L (or heavier) copper tubing.
   C. Copper Pipe — Nom 6 in. (152 mm) diam (or smaller) Regular (or heavier) copper pipe.
4. Pipe Covering Materials* — Cellular Glass Insulation — Nom 1-1/2 in. or 3 in. (38 or 76 mm) thick cellular glass pipe insulation sized to the outside diam of the pipe or tube and installed in accordance with the manufacturer's instructions. The annular space between the insulated pipe and the periphery of the opening shall be min 1/2 in. (13 mm) to max 1-7/8 in. (48 mm). When the metal sleeve (Item 2) is not used, the annular space is min 0 in. (point contact) to max 1-7/8 in. (48 mm).

PITTSBURGH CORNING CORP — FOAMGLAS

5. Metal Jacket — Min 12 in. (305 mm) long jacket formed of min 0.010 in. (0.254 mm) thick steel or aluminum sheet cut to wrap tightly around the pipe insulation with a min 2 in. (51 mm) lap. Jacket secured with min 1/2 in. (13 mm) wide stainless steel hose clamps or bands located within 2 in. (51 mm) of each end of the jacket and spaced a max of 10 in. (254 mm) OC. Jacket to be installed with abutting surface of sealant (Item 6B) on top of floor or both surfaces of wall.
6. Firestop System — The firestop system shall consist of the following:
   A. Packing Material — Min 1-1/2 in. (38 mm) thickness of min 4.0 pcf (64 kg/m3) mineral wool batt insulation firmly packed into opening as a permanent form. Packing material to be recessed from top surface of floor or from both surfaces of wall to accommodate the required thickness of fill material.
   B. Fill, Void or Cavity Material* — Sealant — Min 1 in. (25 mm) thickness of fill material applied within the annulus, flush with the top surface of the floor or with both surfaces of the wall. At point contact location, a min 1/2 in. (13 mm) bead of fill material shall be applied at the concrete/insulated pipe interface on top surface of floor or both surfaces of wall.

   HILTI CONSTRUCTION CHEMICALS, DIV OF HILTI INC — FS-One Sealant or FS-ONE MAX Intumescent Sealant

* Indicates such products shall bear the UL or cUL Certification Mark for jurisdictions employing the UL or cUL Certification (such as Canada), respectively.

Hilti Firestop Systems

Reproduced by HILTI, Inc. Courtesy of Underwriters Laboratories, Inc.
January 15, 2015

System No. C-AJ-5301

Classified by Underwriters Laboratories, Inc. to UL 1479 and CAN/ULC-S115

ANSI/UL1479 (ASTM E814)	CAN/ULC S115
F Rating — 2 Hr	F Rating — 2 Hr
T Rating — 0 and 1-1/2 Hr (See Item 3)	FT Rating — 0 and 1-1/2 Hr (See Item 3)
	FH Rating — 2 Hr
	FTH Rating — 0 and 1-1/2 Hr (See Item 3)

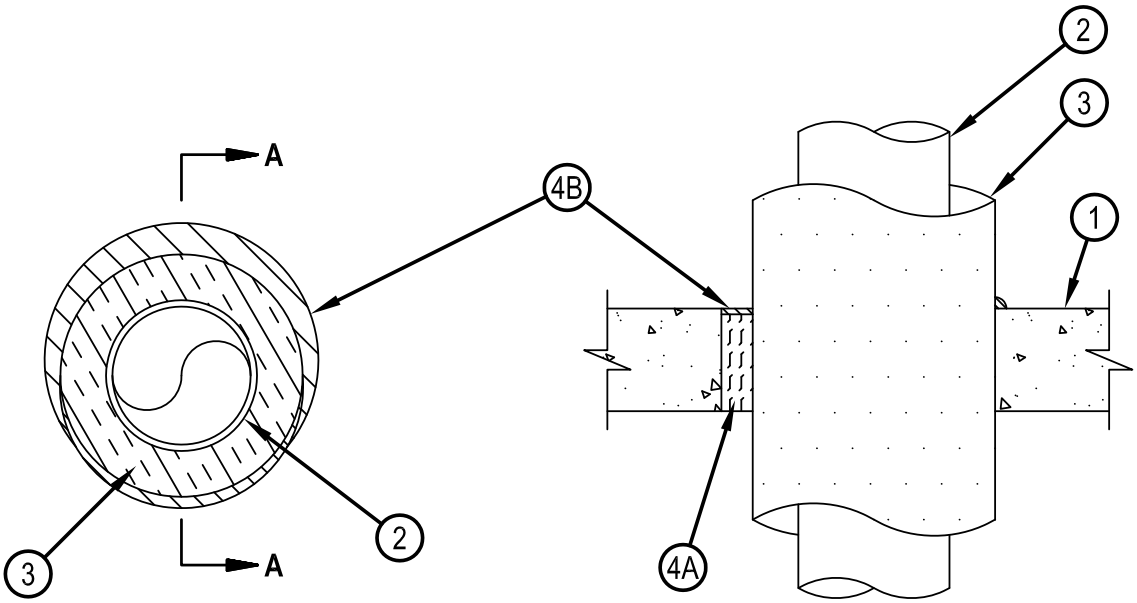

SECTION A-A

1. Floor or Wall Assembly — Min 4-1/2 in. (114 mm) thick reinforced lightweight or normal weight (100-150 pcf or 1600-2400 kg/m3) concrete floor or min 5 in. (127 mm) thick reinforced lightweight or normal weight (100-150 pcf or 1600-2400 kg/m3) concrete wall. Wall may also be constructed of any UL Classified Concrete Blocks*. Max diam of opening is 12 in. (305 mm).
   See Concrete Blocks (CAZT) category in the Fire Resistance Directory for names of manufacturers.
2. Through Penetrants — One metallic pipe or tubing to be installed either concentrically or eccentrically within the firestop system. Pipe or tubing to be rigidly supported on both sides of floor or wall assembly. The following types and sizes of metallic pipes or tubing may be used:
   A. Steel Pipe — Nom 6 in. (152 mm) diam (or smaller) Schedule 40 (or heavier) steel pipe.
   B. Iron Pipe — Nom 6 in. (152 mm) diam (or smaller) cast or ductile iron pipe.
   C. Copper Tubing — Nom 6 in. (152 mm) diam (or smaller) Type L (or heavier) copper tubing.
   D. Copper Pipe — Nom 6 in. (152 mm) diam (or smaller) Regular (or heavier) copper pipe.

Reproduced by HILTI, Inc. Courtesy of Underwriters Laboratories, Inc.
January 13, 2015

System No. C-AJ-5301

3. Pipe Covering* — Min 1/2 in. (13 mm) to max 2 in. (51 mm) thick hollow cylindrical heavy density (3.5 pcf or 56 kg/m3) glass fiber units jacketed on the outside with an all service jacket. Longitudinal joints sealed with metal fasteners or factory-applied self-sealing lap tape. Transverse joints secured with metal fasteners or with butt tape supplied with the product. Annular space between insulated penetrant and the periphery of the opening shall be a min 0 in. (point contact) to a max 1-7/8 in. (48 mm). When thickness of pipe covering is less than 2 in. (51 mm), the T Rating for the firestop system is 0 hr.
   See Pipe and Equipment Covering — Materials (BRGU) category in the Building Materials Directory for names of manufacturers. Any pipe covering material meeting the above specifications and bearing the UL Classification Marking with a Flame Spread Index of 25 or less and a Smoke Developed Index of 50 or less may be used.
4. Firestop System — The firestop system shall consist of the following:
   A. Packing Material — Min 4-1/4 in. (108 mm) thickness of min 4 pcf (64 kg/m3) mineral wool batt insulation firmly packed into opening as a permanent form. Packing material to be recessed from top surface of floor or from both surfaces of wall to accommodate the required thickness of fill material.
   B. Fill, Void or Cavity Material* — Sealant — Min 1/4 in. (6 mm) thickness of fill material applied within the annulus, flush with top surface of floor or with both surfaces of wall. Min 1/2 in. (13 mm) bead of sealant applied at point contact location.
   HILTI CONSTRUCTION CHEMICALS, DIV OF HILTI INC — FS-One Sealant or FS-ONE MAX Intumescent Sealeant

* Indicates such products shall bear the UL or cUL Certification Mark for jurisdictions employing the UL or cUL Certification (such as Canada), respectively.

Classified by
Underwriters Laboratories, Inc.
to UL 1479 and CAN/ULC-S115

System No. W-J-5041

ANSI/UL1479 (ASTM E814)	CAN/ULC S115
F Ratings — 1 and 2 Hr (See Item 1)	F Ratings — 1 and 2 Hr (See Item 1)
T Ratings — 0, 3/4 and 1 Hr (See Item 3)	FT Ratings — 0, 3/4 and 1 Hr (See Item 3)
L Rating At Ambient — Less Than 1 CFM/sq ft	FH Ratings — 1 and 2 Hr (See Item 1)
L Rating At 400 F — Less Than 1 CFM/sq ft	FTH Ratings — 0, 3/4 and 1 Hr (See Item 3)
	L Rating At Ambient — Less Than 1 CFM/sq ft
	L Rating At 400 F — Less Than 1 CFM/sq ft

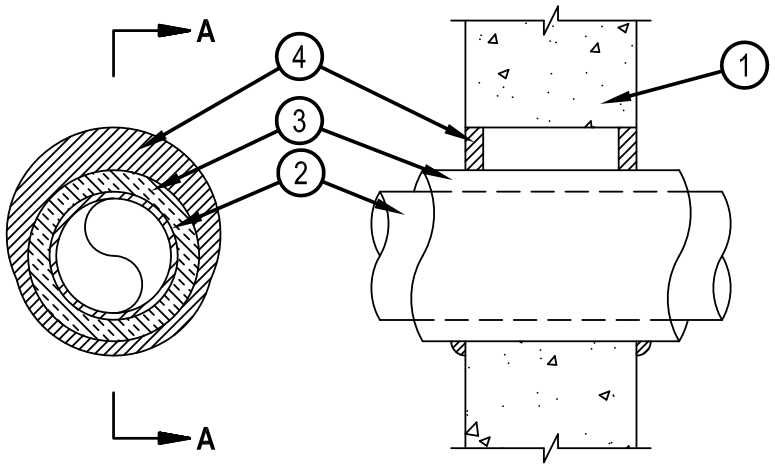

SECTION A-A

1. Wall Assembly — Min 3-3/4 in. (95 mm) and 5 in. (127 mm) thick reinforced lightweight or normal weight (100-150 pcf or 1600-2400 kg/m³) concrete required for F and FH Ratings of 1 and 2 Hr, respectively. Wall may also be constructed of any UL Classified Concrete Blocks*. Max diam of opening is 7-1/2 in. (191 mm).
   See Concrete Blocks (CAZT) category in the Fire Resistance Directory for names of manufacturers.
2. Through Penetrants — One metallic pipe or tubing to be centered within the firestop system. Pipe or tubing to be rigidly supported on both sides of wall assembly. The following types and sizes of metallic pipes or tubing may be used:
   A. Steel Pipe — Nom 4 in. (102 mm) diam (or smaller) Schedule 40 (or heavier) steel pipe.
   B. Copper Tubing — Nom 2 in. (51 mm) diam (or smaller) Type L (or heavier) copper tubing.
   C. Copper Pipe — Nom 2 in. (51 mm) diam (or smaller) regular (or heavier) copper pipe.
3. Tube Insulation—Plastics+ — Min 1/2 in. (13 mm) to max 1 in. (25 mm) thick acrylonitrile butadiene/polyvinyl chloride (AB/PVC) flexible foam furnished in the form of tubing. An annular space of min 0 in. (point contact) to max 1-1/2 in. (38 mm) is required within the firestop system. The T, FT and FTH Ratings are 1 hr when the 1 in. (25 mm) thick tube insulation is used and 3/4 hr when the 3/4 in. (19 mm) thick tube insulation is used. When tube insulation thickness is less than 3/4 in. (19 mm), the T, FT and FTH Ratings are 0 Hr.
   See Plastics+ (QMFZ2) category in the Recognized Component Directory for names of manufacturers. Any Recognized Component tube insulation material meeting the above specifications and having a UL 94 Flammability Classification of 94-5VA may be used.
4. Fill, Void or Cavity Material*—Sealant — Min 5/8 in. (16 mm) thickness of fill material applied within the annulus, flush with both surfaces of wall. At the point contact location between pipe covering and wall, a min 1/2 in. (13 mm) diam bead of fill material shall be applied at the pipe covering/wall interface on both surfaces of wall
   HILTI CONSTRUCTION CHEMICALS, DIV OF HILTI INC — FS-ONE Sealant or FS-ONE MAX Intumescent Sealant

* Indicates such products shall bear the UL or cUL Certification Mark for jurisdictions employing the UL or cUL Certification (such as Canada), respectively.

Hilti Firestop Systems

Reproduced by HILTI, Inc. Courtesy of
Underwriters Laboratories, Inc.
January 21, 2015

Classified by
Underwriters Laboratories, Inc.
to UL 1479 and CAN/ULC-S115

System No. W-J-5042

ANSI/UL1479 (ASTM E814)	CAN/ULC S115
F Ratings — 1, 2 and 3 Hr (See Items 1, 3 and 4)	F Ratings — 1, 2 and 3 Hr (See Items 1, 3 and 4)
T Ratings — 0, 1/2, 1 and 1-1/4 Hr (See Item 3)	FT Ratings — 0, 1/2, 1 and 1-1/4 Hr (See Item 3)
L Rating At Ambient — 4 CFM/Sq Ft	FH Ratings — 1, 2 and 3 Hr (See Items 1, 2 and 4)
L Rating At 400 F — Less Than 1 CFM/Sq Ft	FTH Ratings — 0, 1/2, 1 and 1-1/4 Hr (See Item 3)
	L Rating At Ambient — 4 CFM/Sq Ft
	L Rating At 400 F — Less Than 1 CFM/Sq Ft

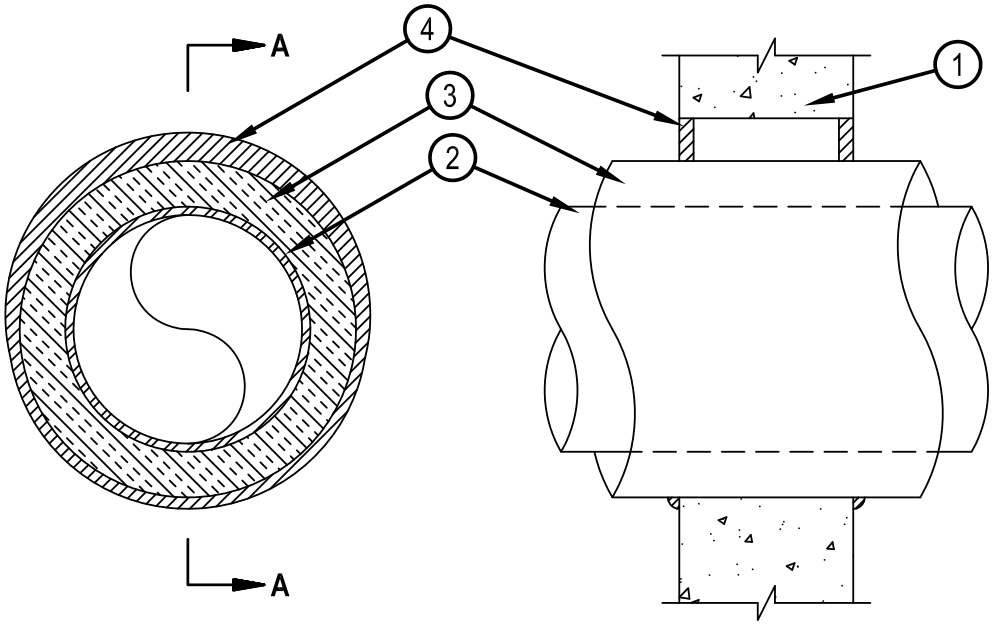

SECTION A-A

1. Wall Assembly — Min 3-3/4, 5 and 7-1/4 in. (95, 127 and 184 mm) thick reinforced lightweight or normal weight (100-150 pcf or 1600-2400 kg/m³) concrete for 1, 2 and 3 h rated assemblies, respectively. Wall may also be constructed of any UL Classified Concrete Blocks*. Max diam of opening is 18-5/8 in. (473 mm).
   See Concrete Blocks (CAZT) category in the Fire Resistance Directory for names of manufacturers.
2. Through—Penetrants — One metallic pipe or tubing to be installed within the firestop system. Pipe or tubing to be rigidly supported on both sides of wall assembly. The following types and sizes of metallic pipes or tubing may be used:
   A. Steel Pipe — Nom 12 in. (305 mm) diam (or smaller) Schedule 10 (or heavier) steel pipe.
   B. Iron Pipe — Nom 12 in. (305 mm) diam (or smaller) cast or ductile iron pipe.
   C. Copper Tubing — Nom 6 in. (152 mm) diam (or smaller) Type L (or heavier) copper tubing. When the hourly F and FH Ratings of the firestop system are 3 hr, the nom diam of copper tube shall not exceed 4 in. (102 mm).
   D. Copper Pipe — Nom 6 in. (152 mm) diam (or smaller) Regular (or heavier) copper pipe. When the hourly F and FH Ratings of the firestop system are 3 hr, the nom diam of copper tube shall not exceed 4 in. (102 mm).

Reproduced by HILTI, Inc. Courtesy of
Underwriters Laboratories, Inc.
March 19, 2015

System No. W-J-5042

3. Pipe Covering* — Nom 1, 1-1/2 or 2 in. (25, 38 or 51 mm) thick hollow-cylindrical heavy density (min 3.5 pcf or 56 kg/m³) glass fiber units jacketed on the outside with an all service jacket. Longitudinal joints sealed with metal fasteners or factory-applied self-sealing lap tape. Transverse joints secured with metal fasteners or with butt tape supplied with the product. For 1 and 2 hr F and FH Ratings, the annular space between insulated penetrant and periphery of opening shall be min 0 in. (point contact) to max 1-7/8 in. (48 mm). For 3 hr F and FH Ratings, the annular space shall be min 0 in. (point contact) to max 1-1/4 in. (32 mm).
   See Pipe and Equipment Covering Materials (BRGU) category in the Building Materials Directory for the names of the manufacturers. Any pipe covering material meeting the above specifications and bearing the UL Classification Marking with a Flame Spread Index of 25 or less and a Smoke Developed Index of 50 or less may be used.
   The hourly T, FT and FTH Ratings of the firestop system are 1/2 hr for 1 hr rated walls and 1 hr for 2 hr rated walls. For 3 hr rated walls, the hourly T, FT and FTH Ratings when steel and iron pipes are used are 1 hr. For 3 hr rated walls, the hourly T, FT and FTH Ratings when copper penetrants are used are 1-1/4 hr for 2 in. (51 mm) thick pipe covering and 0 hr for pipe covering thickness less than 2 in. (51 mm).
4. Fill, Void or Cavity Material*—Sealant — For 1 and 2 hr F and FH Rating, min 5/8 in. (16 mm) thickness of fill material applied within the annulus, flush with both surfaces of wall. For 3 hr F and FH Rating, min 1 in. (25 mm) thickness of fill material applied within the annulus, flush with both surfaces of wall. At the point contact location between pipe covering and wall, a min 1/2 in. (13 mm) diam bead of fill material shall be applied at the pipe covering/wall interface on both surfaces of wall.
   HILTI CONSTRUCTION CHEMICALS, DIV OF HILTI INC — FS-One Sealant or FS-ONE MAX Intumescent Sealant

* Indicates such products shall bear the UL or cUL Certification Mark for jurisdictions employing the UL or cUL Certification (such as Canada), respectively.

Reproduced by HILTI, Inc. Courtesy of
Underwriters Laboratories, Inc.
March 19, 2015

Classified by
Underwriters Laboratories, Inc.
to UL 1479 and CAN/ULC-S115

System No. W-J-5140

F Ratings — 1 and 2 Hr (See Items 1 and 4)
T Ratings — 0, 1/2, and 1 Hr (See Item 3 and 4)

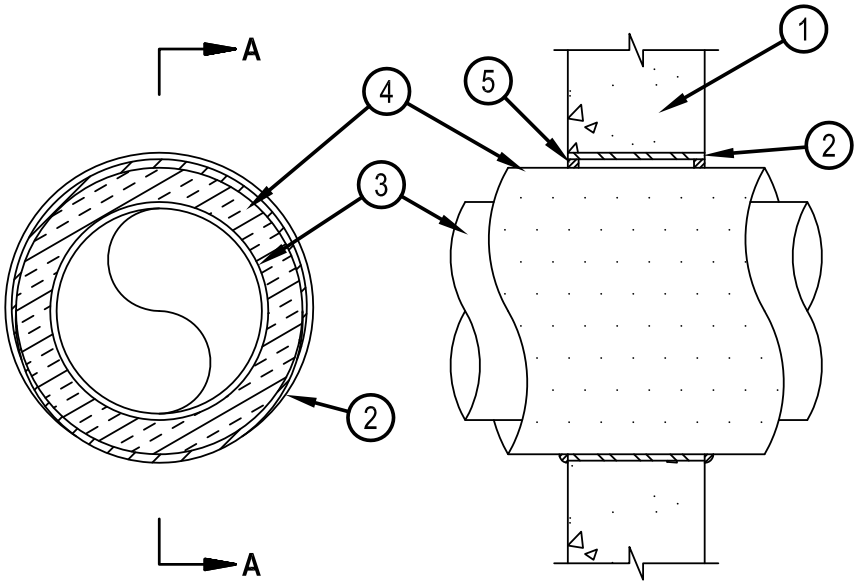

SECTION A-A

1. Wall Assembly — Min 3-3/4 in. (95 mm) and 5 in. (127 mm) thick reinforced lightweight or normal weight (100-150 pcf or 1600 2400 kg/m³) concrete for 1 and 2 hr rated assemblies, respectively. Wall may also be constructed of any UL Classified Concrete Blocks*. The max diam of the opening is dependent upon the type through penetrant installed within the firestop system as shown in Item 4.
   See Concrete Blocks (CAZT) category in the Fire Resistance Directory for names of manufacturers.
2. Steel Sleeve — (Optional) Max 18 in. (457 mm) diam Schedule 40 (or heavier) steel pipe sleeve cast in or grouted into wall, flush with both surfaces of wall assembly.
3. Through Penetrant — One metallic pipe or tubing installed concentrically or eccentrically within the firestop system. Pipe or tube to be rigidly supported on both sides of wall assembly. The following types and sizes of metallic pipes or tube may be used:
   A. Steel Pipe — Nom 12 in. (305 mm) diam (or smaller) Schedule 40 (or heavier) steel pipe. When steel pipe is used, T Rating is 1/2 hr.
   B. Copper Tube — Nom 6 in. (152 mm) diam (or smaller) Type L (or heavier) copper tube. When copper tube is used, T Rating is 1/2 hr and 1 hr when installed in 1 and 2 hr rated walls, respectively.
   C. Copper Pipe — Nom 6 in. (152 mm) diam (or smaller) Regular (or heavier) copper pipe. When copper pipe is used, T Rating is 1/2 and 1 hr when installed in 1 and 2 hr rated walls respectively.
4. Pipe Covering* — Max. 2 in. (51 mm) thick hollow cylindrical heavy density (min 3.5 pcf or 56 kg/m³) glass fiber units, jacketed on the outside with an all service jacket. Longitudinal joints sealed with metal fasteners or factory-applied SSL tape. Transverse joints secured with metal fasteners or with butt tape supplied with the product. When pipe covering thickness is less than 2 in., T Rating is 0 hr.
   See Pipe and Equipment Covering-Materials (BRGU) category in the Building Materials Directory for names of manufacturers. Any pipe covering material meeting the above specifications and bearing the UL Classification Marking with a Flame Spread Index of 25 or less and a Smoke Developed Index of 50 or less may be used.
   The min and max annular space of the firestop system is dependent on the type and max diam of the through penetrant used as shown in the table below:

Through Penetrant Type	Max Diam, In., (mm)	Min Annular Space, In. (mm)	Max Annular Space, In. (mm)
Steel Pipe	12 (305)	0 (0)	1/2 (13)
Copper Pipe or Tube	6 (152)	0 (0)	1-7/8 (48)

Reproduced by HILTI, Inc. Courtesy of
Underwriters Laboratories, Inc.
March 18, 2015

System No. W-J-5140

6. Fill, Void or Cavity Material*-Sealant — Min 5/8 in. (16 mm) thickness of fill material applied within annulus, flush with both surfaces of wall. At point contact, an additional 1/2 in. (13 mm) bead of sealant shall be applied to the insulated pipe/wall interface on both surfaces of wall.
HILTI CONSTRUCTION CHEMICALS, DIV OF HILTI INC — FS-ONE Sealant or FS-ONE MAX Intumescent Sealant

* Indicates such products shall bear the UL or cUL Certification Mark for jurisdictions employing the UL or cUL Certification (such as Canada), respectively.

Reproduced by HILTI, Inc. Courtesy of
Underwriters Laboratories, Inc.
March 18, 2015

System No. W-L-5028

Classified by Underwriters Laboratories, Inc. to UL 1479 and CAN/ULC-S115

ANSI/UL1479 (ASTM E814)	CAN/ULC S115
F Ratings — 1 and 2 Hr (See Item 1)	F Ratings — 1 and 2 Hr (See Item 1)
T Ratings — 0, 3/4 and 1 Hr (See Item 3)	FT Ratings — 0, ¾ and 1 Hr (See Item 3)
L Rating At Ambient — Less Than 1 CFM/sq ft	FH Ratings — 1 and 2 Hr (See Item 1)
L Rating At 400 F — Less Than 1 CFM/sq ft	FTH Ratings — 0, 3/4 and 1 Hr (See Item 3)
	L Rating At Ambient — Less Than 1 CFM/sq ft
	L Rating At 400 F — Less Than 1 CFM/sq ft

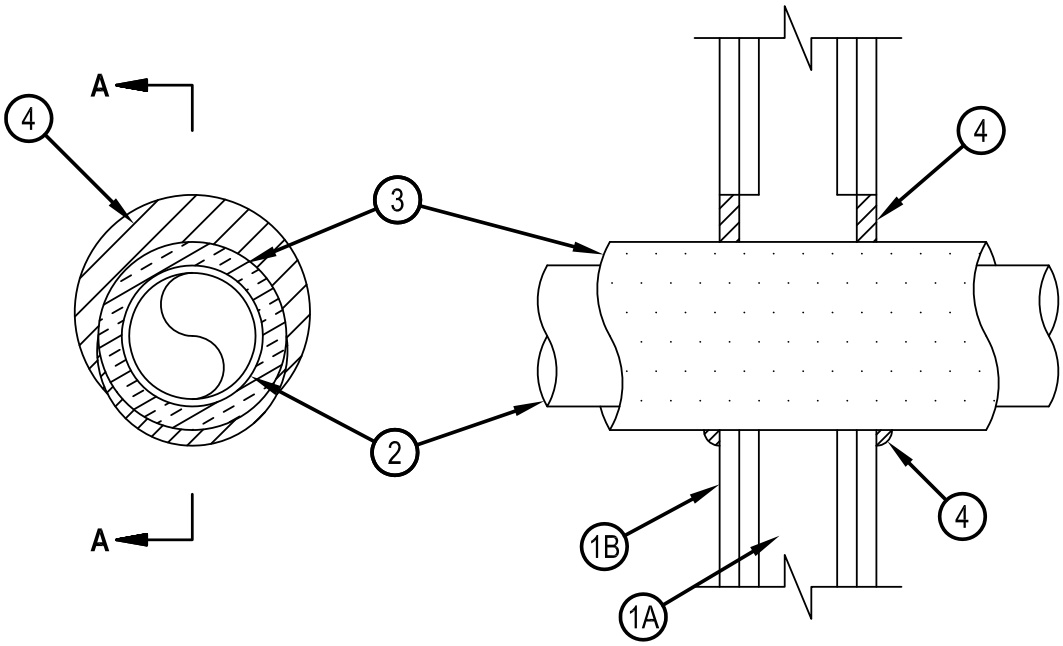

SECTION A-A

1. Wall Assembly — The 1 or 2 hr fire rated gypsum board/stud wall assembly shall be constructed of the materials and in the manner specified in the individual U300, U400, V400 or W400 Series Wall and Partition Designs in the UL Fire Resistance Directory and shall include the following construction features:
   A. Studs — Wall framing may consist of either wood studs or steel channel studs. Wood studs to consist of nom 2 by 4 in. (51 by 102 mm) lumber spaced 16 in. (406 mm) OC. Steel studs to be min 2-1/2 in. (64 mm) wide and spaced max 24 in. (610 mm) OC.
   B. Gypsum Board* — 5/8 in. (16 mm) thick, 4 ft (1.22 m) wide with square or tapered edges. The gypsum board type, thickness, number of layers, fastener type and sheet orientation shall be as specified in the individual Wall and Partition Design. Max diam of opening is 7-1/2 in. (191 mm).

   The hourly F and FH Ratings of the firestop system are equal to the hourly fire rating of the wall assembly in which it is installed.
2. Through Penetrants — One metallic pipe or tubing to be centered within the firestop system. Pipe or tubing to be rigidly supported on both sides of wall assembly. The following types and sizes of metallic pipes or tubing may be used:
   A. Steel Pipe — Nom 4 in. (102 mm) diam (or smaller) Schedule 40 (or heavier) steel pipe.
   B. Copper Tubing — Nom 2 in. (51 mm) diam (or smaller) Type L (or heavier) copper tubing.
   C. Copper Pipe — Nom 2 in. (51 mm) diam (or smaller) Regular (or heavier) copper pipe.

Reproduced by HILTI, Inc. Courtesy of Underwriters Laboratories, Inc.
January 27, 2015

Customer Hotline: Hong Kong 8228 8118, Macau 00800 8228 8118 Email: hksales@hilti.com

System No. W-L-5028

3. Tube Insulation — Plastics+ — Min 1/2 in. (13 mm) to max 1 in. (25 mm) thick acrylonitrile butadiene/polyvinyl chloride (AB/PVC) flexible foam furnished in the form of tubing. An annular space of min 0 in. (point contact) to max 1-1/2 in. (38 mm) is required within the firestop system. The T, FT and FTH Ratings are 1 hr when the 1 in. (25 mm) thick tube insulation is used and 3/4 hr when the 3/4 in. (19 mm) thick tube insulation is used. When tube insulation thickness is less than 3/4 in. (19 mm), the T, FT and FTH Ratings are 0 Hr.
   See Plastics+ (QMFZ2) category in the Recognized Component Directory for names of manufacturers. Any Recognized Component tube insulation material meeting the above specifications and having a UL 94 Flammability Classification of 94-5VA may be used.
4. Fill, Void or Cavity Material* — Sealant — Min 5/8 in. (16 mm) thickness of fill material applied within the annulus, flush with both surfaces of wall. At the point contact location between pipe covering and gypsum board, a min 1/2 in. (13 mm) diam bead of fill material shall be applied at the pipe covering/gypsum board interface on both surfaces of wall.
   HILTI CONSTRUCTION CHEMICALS, DIV OF HILTI INC — FS-ONE Sealant or FS-ONE MAX Intumescent Sealant

* Indicates such products shall bear the UL or cUL Certification Mark for jurisdictions employing the UL or cUL Certification (such as Canada), respectively.

Reproduced by HILTI, Inc. Courtesy of
Underwriters Laboratories, Inc.
January 27, 2015

Classified by
Underwriters Laboratories, Inc.
to UL 1479 and CAN/ULC-S115

System No. W-L-5029

ANSI/UL1479 (ASTM E814)	CAN/ULC S115
F Ratings — 1, 2 and 3 Hr (See Items 1, 3 and 4)	F Ratings — 1, 2 and 3 Hr (See Items 1, 3 and 4)
T Ratings — 0, 1/2, 1 and 1-1/4 Hr (See Item 3)	FT Ratings — 0, 1/2, 1 and 1-1/4 Hr (See Item 3)
L Rating At Ambient — 4 CFM/Sq Ft	FH Ratings — 1, 2 and 3 Hr (See Items 1, 2 and 4)
L Rating At 400 F — Less Than 1 CFM/Sq Ft	FTH Ratings — 0, 1/2, 1 and 1-1/4 Hr (See Item 3)
	L Rating At Ambient — 4 CFM/Sq Ft
	L Rating At 400 F — Less Than 1 CFM/Sq Ft

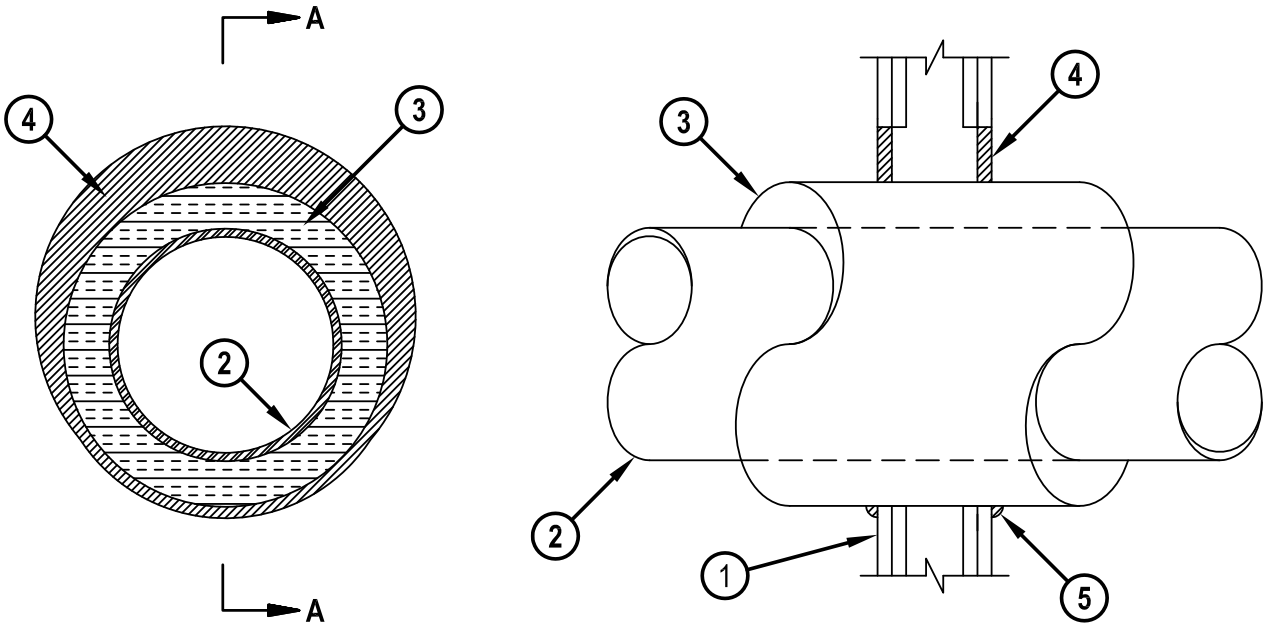

SECTION A-A

1. Wall Assembly — The 1, 2 or 3 hr fire-rated gypsum board/stud wall assembly shall be constructed of the materials and in the manner specified in the individual U300, U400, V400 or W400 Series Wall and Partition Designs in the UL Fire Resistance Directory and shall include the following construction features:
   A. Studs — Wall framing may consist of either wood studs or steel channel studs. Wood studs to consist of nom 2 by 4 in. (51 by 102 mm) lumber spaced 16 in. (406 mm) OC. Steel studs to be min 2-1/2 in. (64 mm) wide for 1 and 2 hr F and FH rating and 3-1/2 in. (89 mm) wide for 3 hr F and FH rating and spaced max 24 in. (610 mm) OC.
   B. Gypsum Board* — Min 5/8 in. (16 mm) thick with square or tapered edges. The gypsum board type, thickness, number of layers, fastener type and sheet orientation shall be as specified in the individual Wall and Partition Design. Max diam of opening is 18-5/8 in. (473 mm).
   The hourly F and FH Ratings of the firestop system are equal to the hourly fire rating of the wall assembly in which it is installed.
2. Through Penetrants — One metallic pipe or tubing to be installed within the firestop system. Pipe or tubing to be rigidly supported on both sides of wall assembly. The following types and sizes of metallic pipes or tubing may be used:
   A. Steel Pipe — Nom 12 in. (305 mm) diam (or smaller) Schedule 10 (or heavier) steel pipe.
   B. Iron Pipe — Nom 12 in. (305 mm) diam (or smaller) cast or ductile iron pipe.
   C. Copper Tubing — Nom 6 in. (152 mm) diam (or smaller) Type L (or heavier) copper tubing. When the hourly F or FH Rating of the firestop system is 3 hr, the nom diam of copper tube shall not exceed 4 in. (102 mm).
   D. Copper Pipe — Nom 6 in. (152 mm) diam (or smaller) Regular (or heavier) copper pipe. When the hourly F or FH Rating of the firestop system is 3 hr, the nom diam of copper pipe shall not exceed 4 in. (102 mm).

Reproduced by HILTI, Inc. Courtesy of
Underwriters Laboratories, Inc.
March 19, 2015

System No. W-L-5029

3. Pipe Covering* — Nom 1, 1-1/2 or 2 in. (25, 38 or 51 mm) thick hollow cylindrical heavy density (min 3.5 pcf or 56 kg/m³) glass fiber units jacketed on the outside with an all service jacket. Longitudinal joints sealed with metal fasteners or factory-applied self-sealing lap tape. Transverse joints secured with metal fasteners or with butt tape supplied with the product. For 1 and 2 hr F and FH Ratings, the annular space between insulated penetrant and periphery of opening shall be min 0 in. (point contact) to max 1-7/8 in. (48 mm). For 3 hr F and FH Ratings, the annular space shall be min 0 in. (point contact) to max 1-1/4 in. (32 mm).
   See Pipe and Equipment Covering — Materials (BRGU) category in the Building Material Directory for the names of manufacturers. Any pipe covering material meeting the above specifications and bearing the UL Classification Marking with a Flame Spread Index of 25 or less and a Smoke Developed Index of 50 or less may be used.
   The hourly T, FT, FTH Ratings of the firestop system are 1/2 hr for 1 hr rated walls and 1 hr for 2 hr rated walls. For 3 hr rated walls, the hourly T, FT and FTH Ratings when steel and iron pipes are used are 1 hr. For 3 hr rated walls, the hourly T, FT and FTH Ratings when copper penetrants are used are 1-1/4 hr for 2 in. (51 mm) thick pipe covering and 0 hr for pipe covering thickness less than 2 in. (51 mm).

3A. Pipe Covering* — (Not Shown) — As an alternate to Item 3, max 2 in. (51 mm) thick cylindrical calcium silicate (min 14 pcf) units sized to the outside diam of the pipe or tube may be used. Pipe insulation secured with stainless steel bands or min 18 AWG stainless steel wire spaced max 12 in. (305 mm) OC. When the alternate pipe covering is used, the T and FT Rating shall be as specified in item 3 above.
   See Pipe and Equipment Covering — Materials (BRGU) category in the Building Materials Directory for names of manufacturers. Any pipe covering material meeting the above specifications and bearing the UL Classification Marking with a Flame Spread Index of 25 or less and a Smoke Developed Index of 50 or less may be used.

4. Fill, Void or Cavity Material* — Sealant — For 1 and 2 hr F and FH Rating, min 5/8 in. (16 mm) thickness of fill material applied within the annulus, flush with both surfaces of wall. For 3 hr F and FH Rating, min 1 in. (25 mm) thickness of fill material applied within the annulus, flush with both surfaces of wall. At the point contact location between pipe covering and gypsum board, a min 1/2 in. (13 mm) diam bead of fill material shall be applied at the pipe covering/gypsum board interface on both surfaces of wall.
   HILTI CONSTRUCTION CHEMICALS, DIV OF HILTI INC — FS-One Sealant or FS-ONE MAX Intumescent Sealant

* Indicates such products shall bear the UL or cUL Certification Mark for jurisdictions employing the UL or cUL Certification (such as Canada), respectively.

Reproduced by HILTI, Inc. Courtesy of
Underwriters Laboratories, Inc.
March 19, 2015

Classified by Underwriters Laboratories, Inc. to UL 1479 and CAN/ULC-S115

System No. W-L-5047

ANSI/UL1479 (ASTM E814)	CAN/ULC S115
F Rating — 1 & 2 Hr (See Item 1)	F Rating — 1 & 2 Hr (See Item 1)
T Rating — 0 & 1-1/2 Hr (See Item 1)	FT Rating — 0 & 1-1/2 Hr (See Item 1)
	FH Rating — 1 & 2 Hr (See Item 1)
	FTH Rating — 0 & 1-1/2 Hr (See Item 1)

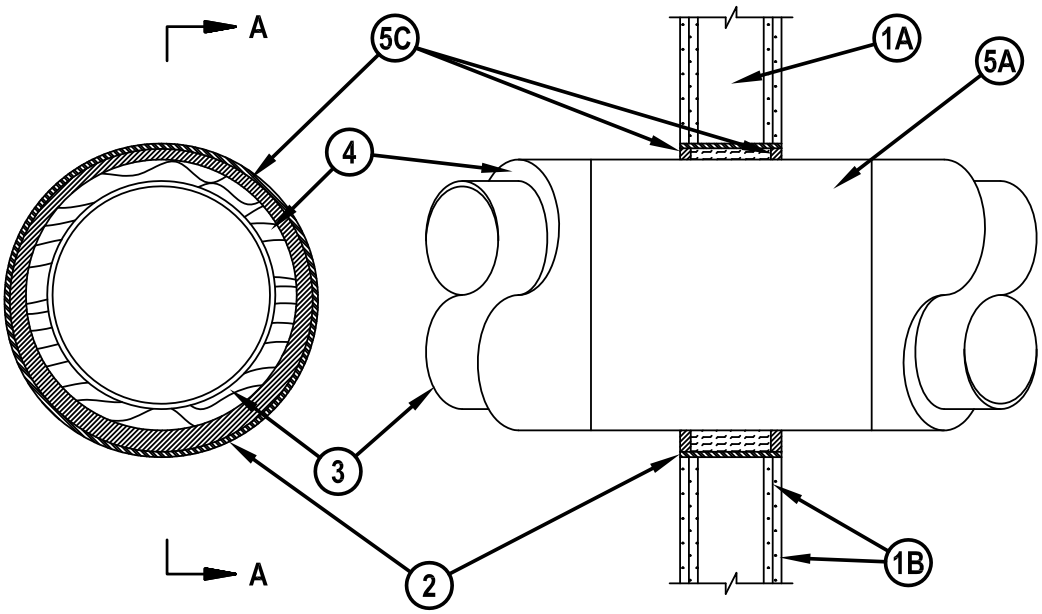

SECTION A-A

1. Wall Assembly — The fire-rated gypsum board/stud wall assembly shall be constructed of the materials and in the manner specified in the individual U300, U400. V400 or W400 Series Wall and Partition Designs in the UL Fire Resistance Directory and shall include the following construction features:

   A. Studs — Wall framing may consist of either wood studs or steel channel studs. Wood studs to consist of nom 2 by 4 in. (51 by 102 mm) lumber spaced 16 in. (406 mm) OC. Steel studs to be min 2-1/2 in. (64 mm) wide and spaced max 24 in. (610 mm) OC. When steel studs are used and the diam of opening exceeds the width of the stud cavity, the opening shall be framed on all sides using lengths of studs installed between the vertical studs and attached to the studs at each end. The framed opening in the wall shall be 4 to 6 in. (102 to 152 mm) wider and 4 to 6 in. (102 to 152 mm) higher than the diam of the metallic sleeve (Item 2) such that a clearance of 2 to 3 in. (51 to 76 mm) is present between the sleeve and the framing on all four sides.

   B. Gypsum Board* — Two layers of nom 5/8 in. (16 mm) thick gypsum board, as specified in the individual Wall and Partition Design. Max diam of opening is 14-1/2 in. (368 mm) for wood stud walls and 30 in. (762 mm) for steel stud walls.
   The hourly F, FH Rating of the firestop system is equal to the hourly fire rating of the wall assembly in which it is installed. The T, FT, FTH Rating is 0 hr when installed in 1 hr wall assembly or when optional metallic sleeve (Item 2) is used. The T, FT, FTH Rating is 1-1/2 hr when installed in 2 hr wall assembly and optional sleeve is not used.

Reproduced by HILTI, Inc. Courtesy of Underwriters Laboratories, Inc.
January 27, 2015

System No. W-L-5047

2. Metallic Sleeve (Optional) — Nom 30 in. (762 mm) diam (or smaller) Schedule 40 (or thinner) steel pipe cast into wall assembly with joint compound and installed flush with wall surfaces.
3. Through Penetrants — One metallic pipe or tubing to be positioned within the firestop system. Pipe or tubing to be rigidly supported on both sides of floor or wall assembly. The following types and sizes of metallic pipes or tubing may be used:
   A. Steel Pipe — Nom 20 in (508 mm) diam (or smaller) Schedule 10 (or heavier) steel pipe.
   B. Iron Pipe — Nom 20 in. (508 mm) diam (or smaller) cast or ductile iron pipe.
   C. Copper Tubing — Nom 6 in. (152 mm) diam (or smaller) Type L (or heavier) copper tubing.
   D. Copper Pipe — Nom 6 in. (152 mm) diam (or smaller) Regular (or heavier) copper pipe.
4. Pipe Covering* — 1 to 3 in. (25 to 76 mm) thick hollow cylindrical heavy density (min 3.5 pcf or 56 kg/m3) glass fiber units jacketed on the outside with an all service jacket. Longitudinal joints sealed with metal fasteners of factory-applied self-sealing lap tape. Transverse joints secured with metal fasteners or with butt tape supplied with the product. Pipe covering to terminate 6 in. (152 mm) from each side of the assembly.
5. Firestop System — The firestop system shall consist of the following:
   A. Pipe Covering Materials* — Nom 1 to 3 in. (25 to 76 mm) thick unfaced mineral fiber pipe insulation sized to the outside diam of pipe or tube and extending 6 in. (152 mm) beyond each surface of the wall surface. Pipe insulation secured with min 18 AWG steel wire 3 in. (76 mm) beyond each surface of the wall assembly. When steel sleeve is not used, the annular space shall be min 1/4 in. (6 mm) to max 3 in. (76 mm), or when sleeve is used, min 1 in. (25 mm) to max 2-1/4 in. (57 mm).
   IIG MINWOOL L L C — High Temperature Pipe Insulation 1200, High Temperature Pipe Insulation BWT or High Temperature Pipe Insulation Thermaloc
   B. Sheathing Material* — All service jacket material shall be wrapped around the outer circumference of the pipe covering material (Item 4A) with kraft side exposed. Longitudinal joints sealed with metal fasteners or self-sealing lap tape.
   See Sheathing Material (BVDV) category in the Building Materials Directory for names of manufacturers. Any sheathing material meeting the above specifications and bearing the UL Classification Marking with a Flame Spread Index of 25 or less and a Smoke Developed Index of 50 or less may be used.
   C. Fill, Void or Cavity Material* — Sealant — Min 5/8 in. or 1-1/4 in. (16 mm or 32 mm) thickness of fill material applied within the annulus flush with both surfaces of wall, for 1 or 2 hr walls, respectively.
   HILTI CONSTRUCTION CHEMICALS, DIV OF HILTI INC — FS-ONE Sealant or FS-ONE MAX Intumescent Sealant-

* Indicates such products shall bear the UL or cUL Certification Mark for jurisdictions employing the UL or cUL Certification (such as Canada), respectively.

Reproduced by HILTI, Inc. Courtesy of
Underwriters Laboratories, Inc.
January 27, 2015

Classified by
Underwriters Laboratories, Inc.
to UL 1479 and CAN/ULC-S115

System No. W-L-5096

ANSI/UL1479 (ASTM E814)	CAN/ULC S115
F Ratings - 1 and 2 Hr (See Item 1)	F Ratings - 1 and 2 Hr (See Item 1)
T Ratings - 0, 1/2 and 1 (See Items 3 and 4)	FT Ratings - 0, 1/2 and 1 (See Items 3 and 4)
	FH Ratings - 1 and 2 Hr (See Item 1)
	FTH Ratings - 0, 1/2 and 1 (See Items 3 and 4)

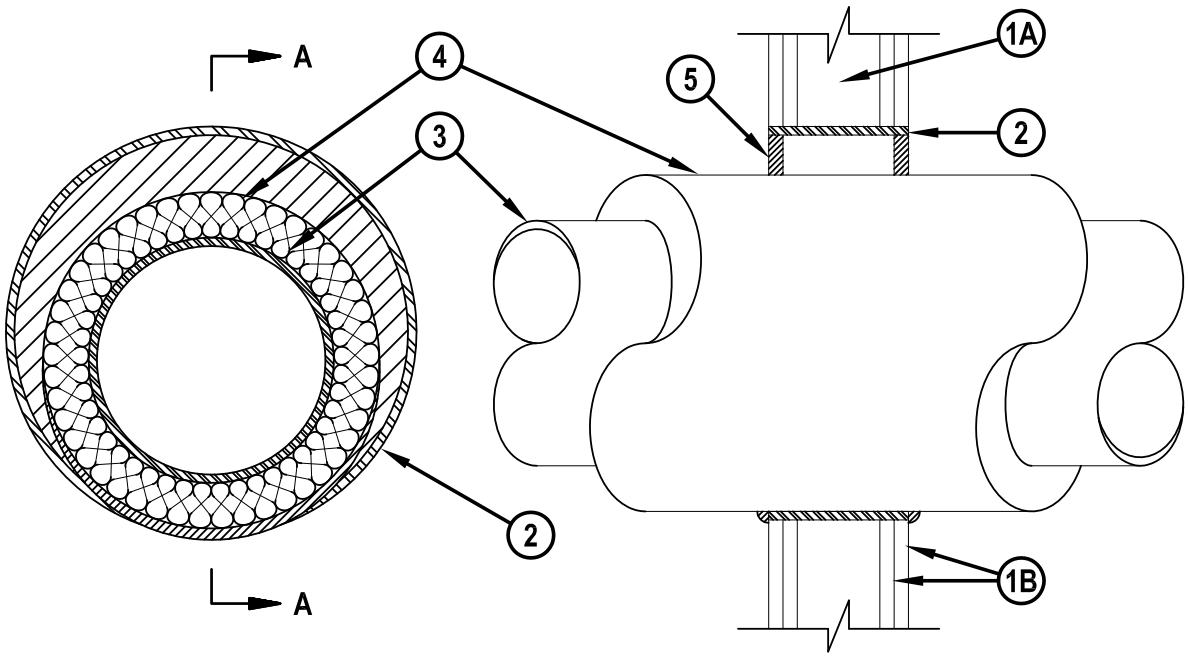

SECTION A-A

1. Wall Assembly — The 1 or 2 hr fire rated wallboard/stud wall assembly shall be constructed of the materials and in the manner specified in the individual U300, U400, V400 or W400 Series Wall and Partition Designs in the UL Fire Resistance Directory and shall include the following construction features:
   A. Studs — Wall framing shall consist of either wood studs or steel channel studs. Wood studs to consist of nom 2 by 4 in. (51 by 102 mm) lumber spaced 16 in. (406 mm) OC. Steel studs to be min 2-1/2 in. (64 mm) wide and spaced max 24 in. (610 mm) OC.
   B. Gypsum Board* — Nom 5/8 in. (16 mm) thick, 4 ft (1.2 m) wide with square or tapered edges. The gypsum board type, thickness, number of layers, fastener type and sheet orientation shall be as specified in the individual U300, U400, V400 or W400 Series Design in the Fire Resistance Directory. Max diam of openings is 14-1/2 in. (368 mm) for wood stud walls. Max diam of opening is 18-5/8 in. (473 mm) for steel studs walls or sized to the outside diam of steel sleeve (Item 2) when optional steel sleeve is used.
   The hourly F and FH Ratings of the firestop system are equal to the hourly fire rating of the wall assembly in which it is installed.
2. Steel Sleeve — (Optional) Max 18 in. (457 mm) diam Schedule 40 (or heavier) steel pipe sleeve inserted in opening core drilled through wall. Length of steel sleeve to be equal to thickness of wall.

Reproduced by HILTI, Inc. Courtesy of
Underwriters Laboratories, Inc.
March 19, 2015

System No. W-L-5096

3. Through Penetrant — One metallic pipe or tubing installed concentrically or eccentrically within the firestop system. Pipe or tube to be rigidly supported on both sides of wall assembly. The following types and sizes of metallic pipes or tube may be used:
   A. Steel Pipe — Nom 12 in. (305 mm) diam (or smaller) Schedule 40 (or heavier) steel pipe. When steel pipe is used, T, FT and FTH Ratings are 1/2 hr and 1 hr when installed in 1 and 2 hr rated walls, respectively.
   B. Copper Tube — Nom 6 in. (152 mm) diam (or smaller) Type L (or heavier) copper tube. When copper tube is used, T, FT and FTH Ratings are 1/2 hr and 1 hr when installed in 1 and 2 hr rated walls, respectively.
   C. Copper Pipe — Nom 6 in. (152 mm) diam (or smaller) Regular (or heavier) copper pipe. When copper pipe is used, T, FT and FTH Ratings are 1/2 and 1 hr when installed in 1 and 2 hr rated walls respectively.
4. Pipe Covering* — Max. 2 in. (51 mm) thick hollow cylindrical heavy density (nom 3.5 pcf or 56 kg/m^3) glass fiber units, jacketed on the outside with an all service jacket. Longitudinal joints sealed with metal fasteners or factory-applied SSL tape. Transverse joints secured with metal fasteners or with butt tape supplied with the product. The annular space between insulated penetrant and periphery of opening shall be min 0 in. (point contact) to max 1-7/8 in. (48 mm).
   When pipe covering thickness is less than 2 in. (51 mm), T, FT and FTH Ratings are 0 hr.
   See Pipe and Equipment Covering-Materials (BRGU) category in the Building Materials Directory for names of manufacturers. Any pipe covering material meeting the above specifications and bearing the UL Classification Marking with a Flame Spread Index of 25 or less and a Smoke Developed Index of 50 or less may be used.
5. Fill, Void or Cavity Material*-Sealant — Min 5/8 in. (16 mm) or thickness of fill material applied within annulus, flush with both surfaces of wall assembly for At point contact an additional 1/2 in. (13 mm)bead of sealant shall be applied to the insulated pipe/ wall interface.
   HILTI CONSTRUCTION CHEMICALS, DIV OF HILTI INC — FS-ONE Sealant or FS-ONE MAX Intumescent Sealant

* Indicates such products shall bear the UL or cUL Certification Mark for jurisdictions employing the UL or cUL Certification (such as Canada), respectively.

Reproduced by HILTI, Inc. Courtesy of
Underwriters Laboratories, Inc.
March 19, 2015

Classified by Underwriters Laboratories, Inc. to UL 1479 and CAN/ULC-S115

System No. W-L-5223

ANSI/UL1479 (ASTM E814)	CAN/ULC S115
F Rating — 1 and 2 Hr (See Item 1)	F Rating — 1 and 2 Hr (See Item 1)
T Rating — 0 Hr	FT Rating — 0 Hr
	FH Rating — 1 and 2 Hr (See Item 1)
	FTH Rating — 0 Hr

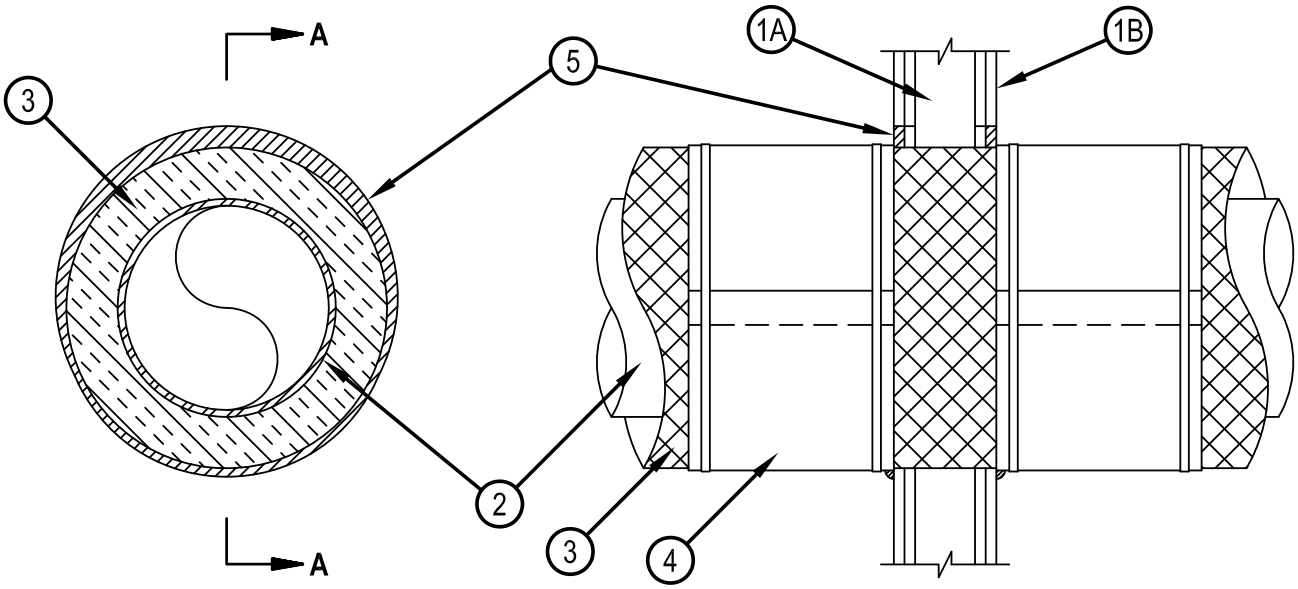

SECTION A-A

1. Wall Assembly — The 1 or 2 hr fire rated gypsum board/stud wall assembly shall be constructed of the materials and in the manner specified in the individual U300, U400, V400 or W400 Series Wall and Partition Designs in the UL Fire Resistance Directory and shall include the following construction features.
   A. Studs — Wall framing shall consist of either wood studs or steel channel studs. Wood studs to consist of nom 2 by 4 in. (51 by 102 mm) lumber spaced 16 in. (406 mm) OC. Steel studs to be min 3-1/2 in. (89 mm) wide and spaced max 24 in. (610 mm) OC.
   B. Gypsum Board* — One or two layers of nom 5/8 in. (16 mm) thick gypsum board as specified in the individual Wall and Partition Design. Max diam of opening is 14-1/2 in. (368 mm) for wood stud walls and 20 in. (508 mm) for steel stud walls.
   The hourly F, FH Ratings of the firestop system are equal to the hourly fire rating of the wall assembly in which it is installed.
2. Through Penetrants — One metallic pipe or tubing to be installed within the firestop system. Pipe or tubing to be rigidly supported on both sides of wall assembly. The following types and sizes of metallic pipes or tubing may be used:
   A. Steel Pipe — Nom 12 in. (305 mm) diam (or smaller) Schedule 10 (or heavier) steel pipe.
   B. Copper Tubing — Nom 6 in. (152 mm) diam (or smaller) Type L (or heavier) copper tubing.
   C. Copper Pipe — Nom 6 in. (152 mm) diam (or smaller) Regular (or heavier) copper pipe.

Reproduced by HILTI, Inc. Courtesy of Underwriters Laboratories, Inc.
January 27, 2015

System No. W-L-5223

3. Pipe Covering Materials* — Cellular Glass Insulation — Nom 1-1/2 in. or 3 in. (38 to 51 mm) thick cellular glass pipe insulation sized to the outside diam of the pipe or tube and installed in accordance with the manufacturer's instructions. The annular space between the insulated pipe and the periphery of the opening shall be min 0 in. (point contact) to max 1-1/4 in. (32 mm).
   PITTSBURGH CORNING CORP — FOAMGLAS
4. Metal Jacket — Min 12 in. (305 mm) long jacket formed of min 0.010 in. (0.25 mm) thick steel or aluminum sheet cut to wrap tightly around the pipe insulation with a min 2 in. (51 mm) lap. Jacket secured with min 1/2 in. (13 mm) wide stainless steel hose clamps or bands located within 2 in. (51 mm) of each end of the jacket and spaced a max of 10 in. (254 mm) OC. Jacket to be installed with abutting surface of sealant (Item 5) on both surfaces of wall.
5. Void or Cavity Material* - Sealant — Min 5/8 in. (16 mm) thickness of fill material applied within the annulus, flush with both surfaces of wall. At the point contact location, a min 1/2 in. (13 mm) diam bead of fill material shall be applied at the pipe covering/gypsum board interface on both surfaces of wall.
   HILTI CONSTRUCTION CHEMICALS, DIV OF HILTI INC — FS-ONE Sealant or FS-ONE MAX Intumescent Sealant

* Indicates such products shall bear the UL or cUL Certification Mark for jurisdictions employing the UL or cUL Certification (such as Canada), respectively.

Reproduced by HILTI, Inc. Courtesy of
Underwriters Laboratories, Inc.
January 27, 2015

Classified by
Underwriters Laboratories, Inc.
to UL 1479 and CAN/ULC-S115

System No. W-L-5244

ANSI/UL1479 (ASTM E814)	CAN/ULC S115
F Rating —2 Hr	F Rating — 2 Hr
T Ratings — 0 and 3/4 Hr (See Item 4)	FT Ratings — 0 and 3/4 Hr (See Item 4)
	FH Rating — 2 Hr
	FTH Ratings — 0 and 3/4 Hr (See Item 4)

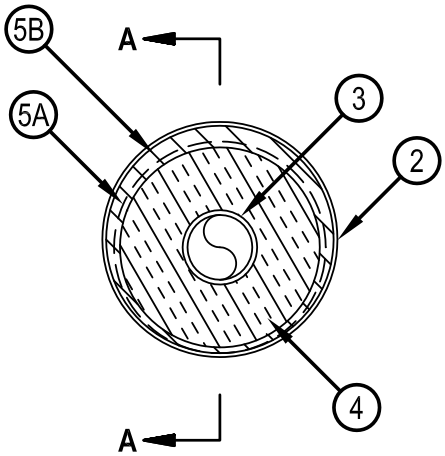

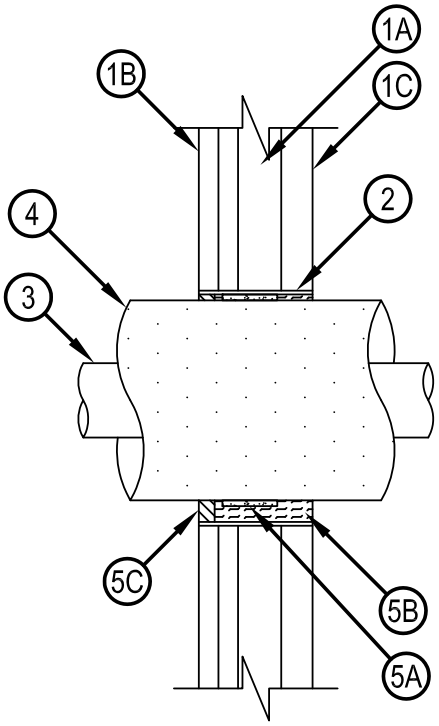

SECTION A-A

1. Wall Assembly — The 2 hr fire rated shaft wall assembly shall be constructed of the materials and in the manner specified in the individual U400, V400 or W400 Series Wall and Partition Designs in the UL Fire Resistance Directory and shall include the following construction features:
   A. Steel Studs — C - H or C - T shaped studs, 2-1/2 in. (64 mm) wide by 1- 1/2 in. (38 mm) deep, spaced 24 in. (610 mm) OC.
   B. Gypsum Board* — 1 in. (25 mm) thick gypsum board liner panels, supplied in nom 24 in. (610 mm) widths and installed vertically as specified in the individual U400 or V400 Series Wall and Partition Design. Max diam of opening is 7-1/2 in. (191 mm).
   C. Gypsum Board* — Two layers of min 1/2 in. (13 mm) thick gypsum board as specified in the individual U400 or V400 Series Wall and Partition Design. Max diam of opening is 7 - 1/2 in. (191 mm).

1A. Wall Assembly — As an alternate to the above wall assembly, the 2 Hr fire rated gypsum board/stud wall assembly shall be constructed of the materials and in the manner specified in the individual U300, U400, V400 or W400 Series Wall and Partition Designs in the UL Fire Resistance Directory and shall include the following construction features:
   A. Studs — Wall framing may consist of either wood studs or steel channel studs. Steel studs to be min 2-1/2 in. (64 mm) wide and spaced max 24 in. (610 mm) OC. Wood studs to consist of nom 2 by 4 in. (51 by 102 mm) lumber spaced 16 in. (406 mm) OC.
   B. Gypsum Board* — Thickness, type, number of layers and fasteners as required in the individual Wall and Partition Design. Max diam of opening is 7-1/2 in. (191 mm).

Reproduced by HILTI, Inc. Courtesy of
Underwriters Laboratories, Inc.
January 26, 2015

System No. W-L-5244

2. Steel Sleeve — Cylindrical sleeve fabricated from nom 0.019 in. (0.49 mm) thick (or lighter) galv sheet steel and having a min 1 in. (25 mm) lap along the longitudinal seam. Length of steel sleeve to be equal to thickness of wall such that, when installed, the ends of the sleeve will be flush with each wall surface. Sleeve installed by coiling the sheet steel to a diam smaller than the through opening, inserting the coil through the opening and releasing the coil to let it uncoil against the circular cutouts in the gypsum board layers.
3. Through Penetrants — One metallic pipe or tube installed within the firestop system. Pipe or tube to be rigidly supported on both sides of wall assembly. The following types of metallic pipes or tubes may be used:
   A. Steel Pipe — Nom 2 in. (51 mm) diam (or smaller) Schedule 5 (or heavier) steel pipe.
   B. Iron Pipe — Nom 2 in. (51 mm) diam (or smaller) cast or ductile iron pipe.
   C. Copper Tubing — Nom 2 in. (51 mm) diam (or smaller) Type L (or heavier) copper tubing.
   D. Copper Pipe — Nom 2 in. (51 mm) diam (or smaller) Regular (or heavier) copper pipe.
4. Pipe Covering — Max 2 in. (51 mm) thick hollow cylindrical heavy density glass fiber units jacketed on the outside with an all service jacket. Longitudinal joints sealed with metal fasteners or factory-applied self-sealing lap tape. Transverse joints secured with metal fasteners or with butt tape supplied with product. Annular space between the pipe covering and sleeve shall be min 3/16 in. (5 mm) to max 13/16 in. (21 mm). See Pipe and Equipment Covering-Materials (BRGU) category in the Building Materials Directory for names of manufacturers. Any pipe covering material meeting the above specifications and bearing the UL Classification Marking with a Flame Spread value of 25 or less and a Smoke Developed value of 50 or less may be used.
   The T, FT and FTH Rating of the firestop system is dependent upon the thickness of the pipe covering. If the nom thickness of the pipe covering is 2 in. (51 mm), the T, FT and FTH Ratings are 3/4 hr. If the nominal thickness of the pipe covering is less than 2 in. (51 mm), the T, FT and FTH Ratings are 0 hr.
5. Firestop System — The firestop system shall consist of the following:
   A. Fill, Void or Cavity Materials* - Wrap Strip — Nom 3/16 in. (5 mm) thick intumescent material supplied in 1- 3/4 in. (45 mm) wide strips. One layer of wrap strip tightly wrapped around pipe covering and held in position using tape. Wrap strip to be recessed approx 3/4 in. (19 mm) from finished surface of wall (Item 1C) such that the leading edge of wrap strip is flush with inner surface of gypsum board liner panel (Item 1B). In alternate wall assembly, the wrap strip is to be recessed approx 3/4 in. from either surface of wall assembly.
   HILTI CONSTRUCTION CHEMICALS, DIV OF HILTI INC — CP 648E Wrap Strip
   B. Packing Material — Min 3-1/4 in. (83 mm) thickness of min 4 pcf (64 kg/m3) mineral wool batt insulation firmly packed into opening as a permanent form. Packing material to be recessed from finished surface of wall to accommodate the required thickness of fill material. In alternate wall assembly, packing material to be flush with the side of the wall opposite of the side from which the wrap strip is recessed. Packing material to be recessed from the other side of the wall to accommodate the required thickness of fill material.
   C. Fill, Void or Cavity Materials* - Sealant — Min 1/2 in. (13 mm) thickness of caulk applied within annulus, flush with finished surface of wall assembly. In alternate wall assembly, min 1/2 in. (13 mm) sealant applied within annulus flush with the surface from which the packing material has been recessed
   HILTI CONSTRUCTION CHEMICALS, DIV OF HILTI INC — FS-ONE Sealant or FS-ONE MAX Intumescent Sealant

* Indicates such products shall bear the UL or cUL Certification Mark for jurisdictions employing the UL or cUL Certification (such as Canada), respectively.

Reproduced by HILTI, Inc. Courtesy of
Underwriters Laboratories, Inc.
January 26, 2015

Classified by
Underwriters Laboratories, Inc.
to UL 1479 and CAN/ULC-S115

System No. C-AJ-6006

F Rating -- 3 Hr
T Rating -- 0 Hr

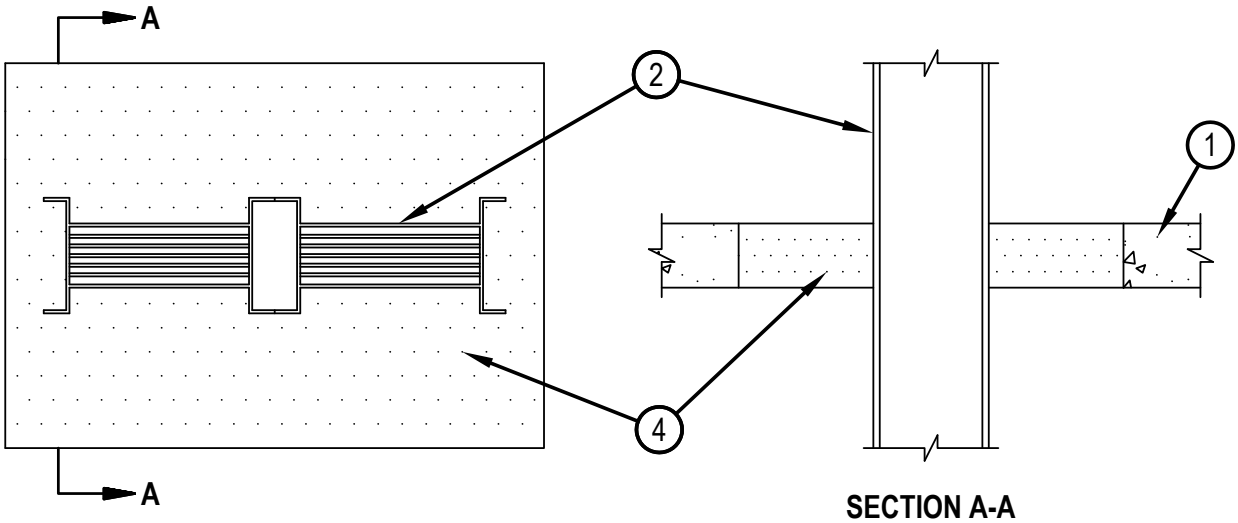

SECTION A-A

1. Floor or Wall Assembly — Min 2-1/2 in. thick reinforced lightweight or normal weight (100-150 pcf) concrete. Wall may also be constructed of any UL Classified Concrete Blocks*. Max area of opening is 560 sq in. with max dimension of 28 in.
   See Concrete Blocks (CAZT) category in the Fire Resistance Directory for names of manufacturers.
2. Busway+ — Nom 23 in. wide (or smaller) by 4.5 in. deep (or smaller) "I" shaped aluminum enclosure containing factory mounted aluminum bars rated for 600 V, 4000 A or copper bars rated for 600V, 5000A. The busway shall bear the UL Listing Mark and shall be installed in accordance with all provisions of Article 364 of the National Electrical Code, NFPA No. 70. The annular space between the busway and the periphery of the opening shall be a min of 1 in.
3. Forms — (Not Shown) — Used as a form to prevent leakage of fill material during installation. Forms to be a rigid sheet material, cut to fit the contour of the penetrating item and positioned as required to accommodate the required thickness of fill material. Forms may be removed after fill material has cured.
4. Fill, Void or Cavity Material* — Mortar — Min 2-1/2 in. thickness of fill material applied within the annulus. Fill material mixed at a rate of 2.5 parts dry mix to one part water by weight in accordance with the installation instructions supplied with fill material.
   HILTI CONSTRUCTION CHEMICALS, DIV OF
   HILTI INC — CP636 or CP637

*Bearing the UL Classification Marking

+Bearing the UL Listing Mark

Hilti Firestop Systems

Reproduced by HILTI, Inc. Courtesy of
Underwriters Laboratories, Inc.
March 19, 2012

Classified by
Underwriters Laboratories, Inc.
to UL 1479 and CAN/ULC-S115

System No. C-AJ-6017

ANSI/UL1479 (ASTM E814)	CAN/ULC S115
F Rating - 3 Hr	F Rating - 3 Hr
T Rating - 0 Hr	FT Rating - 0 Hr
	FH Rating - 3 Hr
	FTH Rating - 0 Hr

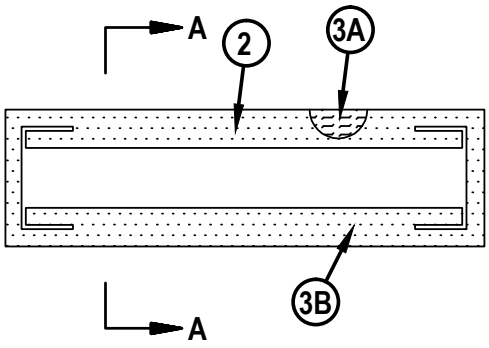

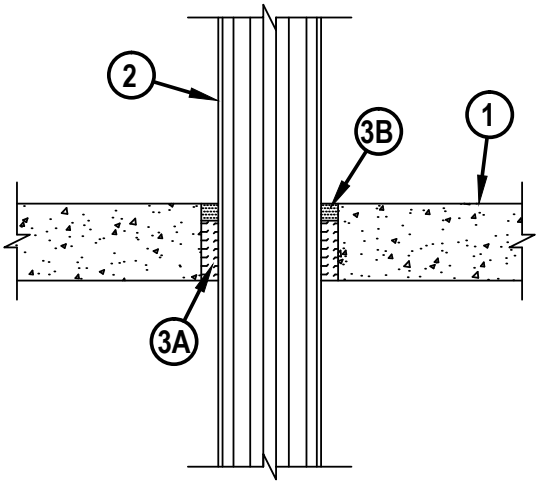

SECTION A-A

1. Floor or Wall Assembly — Min 4-1/2 in. (114 mm) thick reinforced lightweight or normal weight (100-150 pcf or 1600-2400 kg/m3) concrete. Wall may also be constructed of any UL Classified Concrete Blocks*. Max area of opening is 224 square in. (1445 cm2) with max dimension of 28 in. (711 mm).
   See Concrete Blocks (CAZT) category in the Fire Resistance Directory for names of manufacturers.
2. Busway+ — Nominal 26 in. (660 mm) wide (or smaller) by 6 in. (152 mm) deep "I" shaped steel enclosure containing factory mounted aluminum bars rated for 600 V, 4000 A. One busway to be installed within the opening. the annular space between the flange tip of the busway and the periphery of the opening shall be 1 in. (25 mm). The annular space between the web of the busway and the periphery of the opening shall be 2 in. (51 mm). Busway to be ridged supported on both sides of floor and wall assembly. The busway shall bear the UL Listing Mark and shall be installed in accordance with all provisions of the National Electrical Code, NFPA No. 70.
3. Firestop System — The firestop system shall consist of the following:
   A. Packing Material — Min 3-1/2 in. (89 mm) thickness of min 4 pcf (64 kg/m3) mineral wool batt insulation firmly packed into opening as a permanent form. Packing material to be recessed from top surface of floor or from both surfaces of wall as required to accommodate the required thickness of fill material.
   B. Fill, Void or Cavity Material* — Sealant — Min 1 in. (25 mm) thickness of fill material applied within the annulus, flush with top surface of floor or with both surfaces of wall.
   HILTI CONSTRUCTION CHEMICALS, DIV OF HILTI INC — FS-ONE Sealant or FS-ONE MAX Intumescent Sealant.

+Bearing the UL Listing Mark

*Bearing UL Classification Mark

Hilti Firestop Systems

Reproduced by HILTI, Inc. Courtesy of
Underwriters Laboratories, Inc.
January 14, 2015

Classified by
Underwriters Laboratories, Inc.
to UL 1479 and CAN/ULC-S115

System No. C-AJ-6036

F Rating — 2 Hr
T Rating — 1/4 Hr

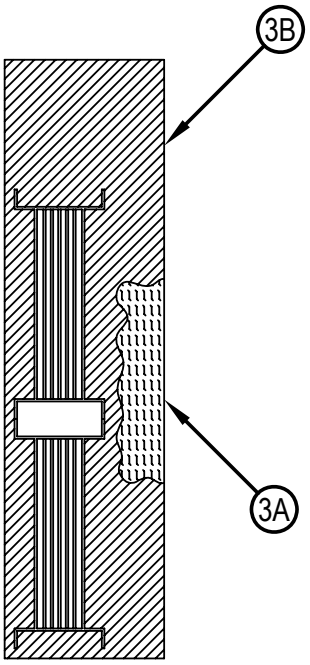

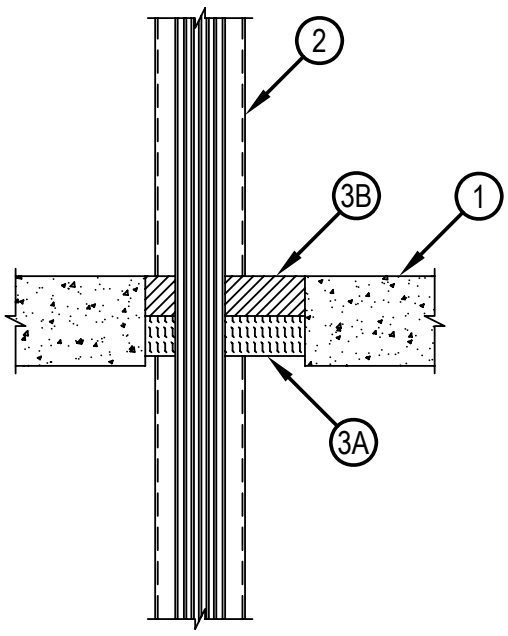

SECTION A-A

1. Floor or Wall Assembly — Reinforced lightweight or normal weight (100-150 pcf or 1600-2400 kg/m3) concrete. Floor thickness is min 4-1/2 in. (114 mm). Wall thickness is min 6 in. (152 mm). Wall may also be constructed of any UL Classified Concrete Blocks*. Max area of opening is 240 in2 (1548 cm2) with max dimension of 30 in. (762 mm).
2. Busways+ — Max two nominal 11-1/4 in. (286 mm) wide (or smaller) by 4-1/2 in. (114 mm) deep or one nominal 23 in. (584 mm) wide (or smaller) by 4-1/2 in. (114 mm) deep "I" shaped aluminum enclosures containing factory mounted aluminum bars rated for 600 V, 4000 A or copper bars rated for 600 V, 5000 A. When two busways are installed, they shall be placed end to end and the annular space between busways shall be min 1/2 in. (13 mm). The annular space between busways and periphery of opening shall be min 1/4 in. (6 mm) to max 5-3/4 in. (146 mm). Busways to be rigidly supported on both sides of floor and wall assembly. The busways` shall bear the UL Listing Mark and shall be installed in accordance with the National Electrical Code, NFPA No. 70.
3. Firestop System — The firestop system shall consist of the following:
   A. Packing Material — Min 2 in. (51 mm) thickness of min 4 pcf (64 kg/m3) mineral wool batt insulation firmly packed into opening between and around each busway as a permanent form. Packing material to be recessed from top surface of floor or from both surfaces of wall to accommodate the required thickness of fill material.
   B. Fill, Void or Cavity Material* — Sealant — Min 2 in. (51 mm) thickness of fill material applied within the annulus between and around each busway, flush with top surface of floor or with both surfaces of wall.
   HILTI CONSTRUCTION CHEMICALS, DIV OF HILTI INC — CP 620 Fire Foam

+Bearing the UL Listing Mark
*Bearing the UL Classification Mark

Hilti Firestop Systems

Reproduced by HILTI, Inc. Courtesy of
Underwriters Laboratories, Inc.
July 01, 2008

System No. W-L-6019

Classified by
Underwriters Laboratories, Inc.
to UL 1479 and CAN/ULC-S115

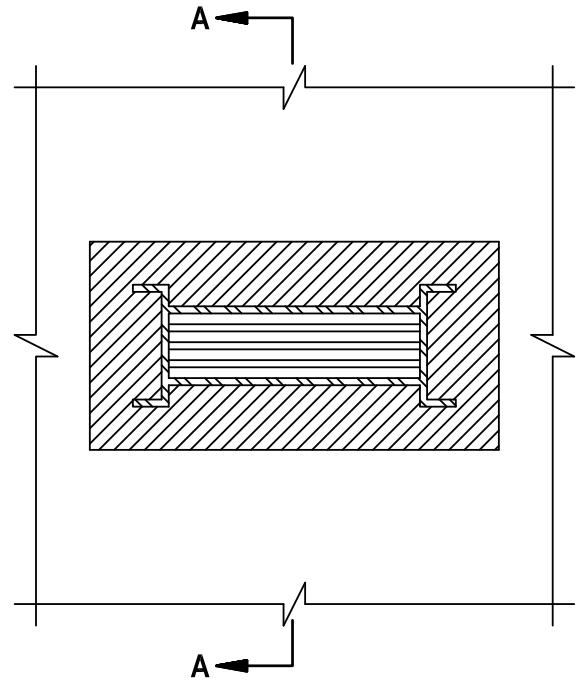

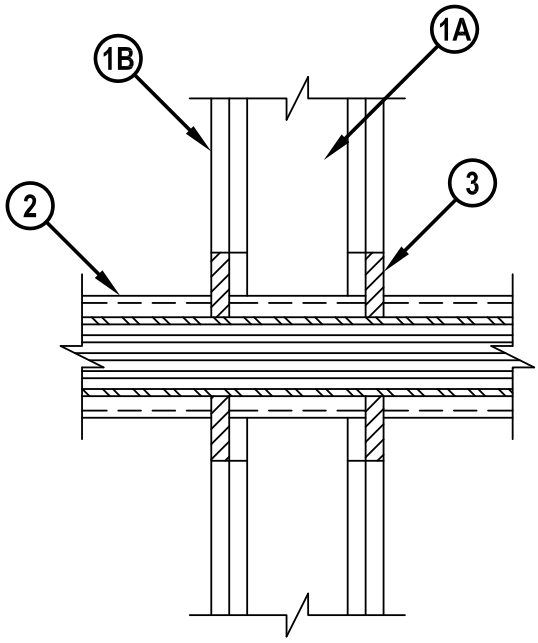

SECTION A-A

Reproduced by HILTI, Inc. Courtesy of
Underwriters Laboratories, Inc.
January 26, 2015

System No. W-L-6019

ANSI/UL1479 (ASTM E814)	CAN/ULC S115
F Ratings — 1 and 2 Hr (See Item 1)	F Ratings — 1 and 2 Hr (See Item 1)
T Rating —1/4 Hr	FT Rating —1/4 Hr
	FH Ratings — 1 and 2 Hr (See Item 1)
	FTH Rating —1/4 Hr

1. Wall Assembly — The 1 and 2 hr fire-rated gypsum wallboard/stud wall assembly shall be constructed of the materials and in the manner described in the individual U300, U400, V400 or W400 Series Wall or Partition Design in the UL Fire Resistance Directory and shall include the following construction features:
   A. Studs — Wall framing may consist of either wood studs or steel channel studs. Wood studs to consist of nom 2 by 4 in. (51 by 102 mm) lumber spaced 16 in. (406 mm) OC. Steel studs to be min 3-5/8 in. (92 mm) wide and spaced max 24 in. (610 mm) OC.
   B. Gypsum Board* — 5/8 in. (16 mm) thick, 4 ft. (1.22 m) wide with square or tapered edges. The gypsum wallboard type, thickness, number of layers, fastener type and sheet orientation shall be as specified in the individual U300, U400, V400 or W400 Series Design in the UL Fire Resistance Directory. Cutout in gypsum wallboard to accomodate busway (Item 2) to be 1-1/2 in. (38 mm) larger than outside dimensions of busway. Max area of opening is 73.3 sq. in. (473 cm2) with max dimensions 12-3/4 in. (324 mm) wide by 5-3/4 in. (146 mm) high.
   The hourly F and FH Ratings of the firestop system are equal to the hourly fire-rating of the wall assembly in which it is installed.
2. Busway+ — Nom 11-1/4 in. (286 mm) wide (or smaller) by 4-1/4 in. (108 mm) deep "I" shaped aluminum bars rated for 600 V, 4000 A or copper bars rated for 600 V, 5000 A. One busway to be installed within the opening. The annular space between the flanges of the busway and the periphery of the opening shall be a min of 1/4 in. (6 mm) to a max of 1-1/4 in. (32 mm). Busway to be rigidly supported on both sides of wall assembly. The busway shall bear the UL Listing Mark and shall be installed in accordance with all provisions of Article 364 of the National Electrical Code, NFPA 70.
3. Fill, Void or Cavity Material* — Sealant — Min 5/8 in. (16 mm) thickness of fill material applied within the annulus, flush with both surfaces of wall.
   HILTI CONSTRUCTION CHEMICALS, DIV OF HILTI INC — FS-ONE Intumescent Firestop Sealant or FS-ONE MAX Intumescent Sealant

* Indicates such products shall bear the UL or cUL Certification Mark for jurisdictions employing the UL or cUL Certification (such as Canada), respectively.

Reproduced by HILTI, Inc. Courtesy of
Underwriters Laboratories, Inc.
January 26, 2015

Customer Hotline: Hong Kong 8228 8118, Macau 00800 8228 8118 Email: hksales@hilti.com

Classified by
Underwriters Laboratories, Inc.
to UL 1479 and CAN/ULC-S115

System No. C-AJ-7046

ANSI/UL1479 (ASTM E814)	CAN/ULC S115
F Rating — 3 Hr	F Rating — 3 Hr
T Rating — 0 Hr	FT Rating — 0 Hr
	FH Rating — 3 Hr
	FTH Rating — 0 Hr

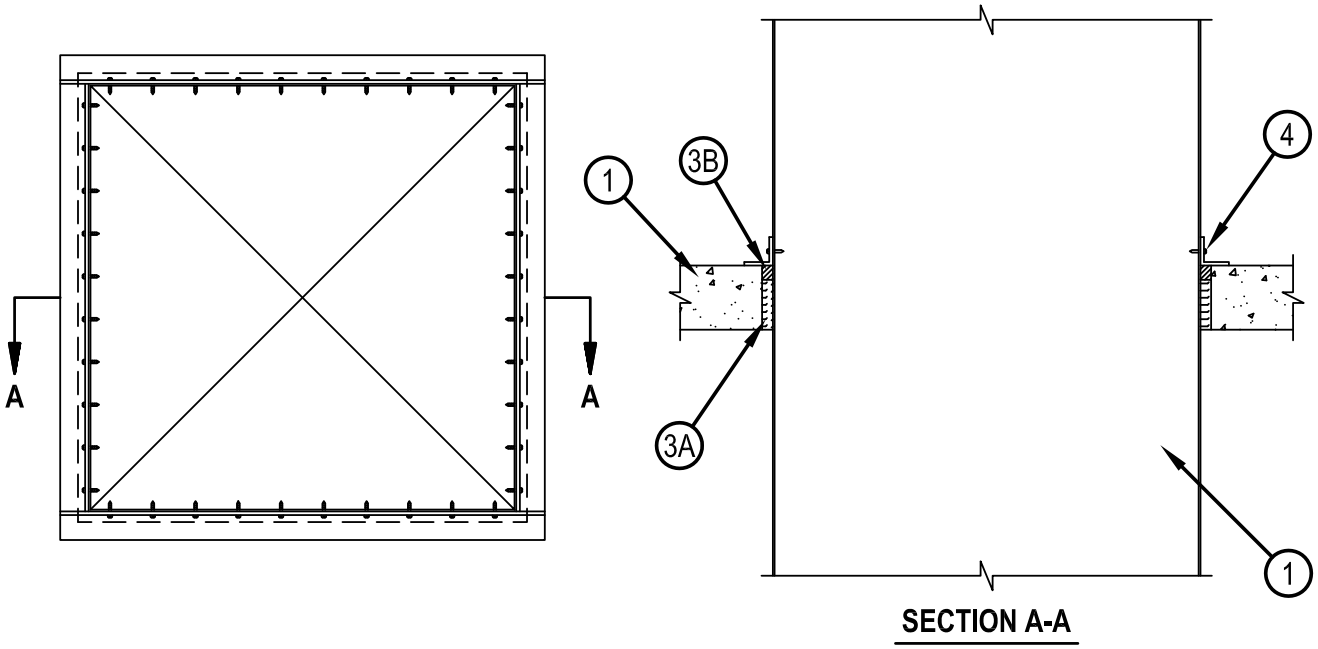

SECTION A-A

1. Floor or Wall Assembly — Min 4-1/2 in. thick reinforced lightweight or normal weight (100-150 pcf) concrete floor or min 5-1/2 in. thick lightweight on normal weight concrete wall. Wall may also be constructed of any UL Classified Concrete Blocks*. Max area of opening is 1139 in. sq with a max dimension of 33-3/4 in.
   See Concrete Blocks (CAZT) category in the Fire Resistance Directory for names of manufacturers.
2. Steel Duct — Nom 32 by 32 by No. 24 gauge (or heavier) galv steel duct. One steel duct to be positioned within the firestop system. The annular space shall be min 1/4 in. to max 1-1/2 in. Duct to be rigidly supported on both sides of floor or wall assembly.
3. Firestop System — The firestop system shall consist of the following:
   A. Packing Materials — Min 3-1/2 in. thickness of min 4 pcf mineral wool batt insulation firmly packed into opening as a permanent form between the bare steel duct and the periphery of the opening. Packing material to be recessed from top surface of floor or both surfaces of wall as required to accommodate the required thickness of fill material.
   B. Fill, Void or Cavity Material* — Sealant — Min 1 in. thickness of fill material applied within the annulus, flush with top surface of floor or with both surfaces of wall.
   HILTI CONSTRUCTION CHEMICALS, DIV OF HILTI INC — CP 601S Elasomeric Firestop Sealant, CFS-S SIL GG, CFS-S SIL SL (floors only) or CP604 Self-Leveling Firestop Sealant
4. Steel Retaining Angle — Nom 2 in. by 2 in. by No. 16 gauge (or heavier) steel angles attached to all four sides of the steel duct on the top surface or both surfaces of the wall. The angles shall be attached with No. 8 (or larger) steel sheet metal screws spaced max of 1 in. from each end and a max of 3 in. OC.

*Bearing the UL Classification Mark

Hilti Firestop Systems

Reproduced by HILTI, Inc. Courtesy of
Underwriters Laboratories, Inc.
December 26, 2013

Classified by
Underwriters Laboratories, Inc.
to UL 1479 and CAN/ULC-S115

System No. C-AJ-7051

ANSI/UL1479 (ASTM E814)	CAN/ULC S115
F Rating - 3 Hr	F Rating — 3 Hr
T Rating - 1 Hr	FT Rating - 1 Hr
	FH Rating - 3 Hr
	FTH Rating - 1 HR

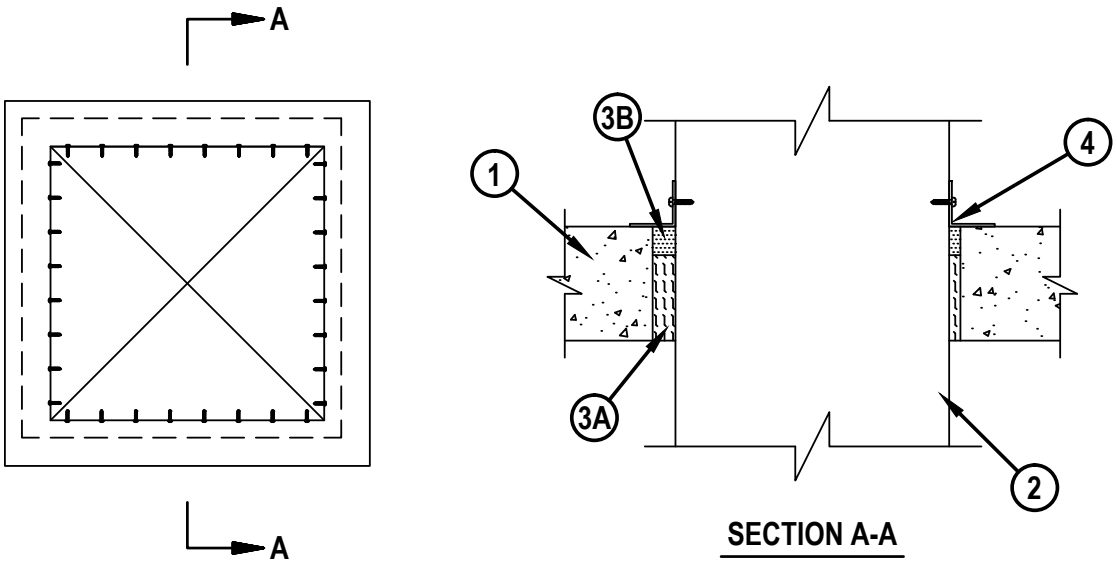

SECTION A-A

1. Floor or Wall Assembly — Min 4-1/2 in. (114 mm) thick reinforced lightweight or normal weight (100-150 pcf or 1600-2400 kg/m3) concrete floor or min 5-1/2 in. (140 mm) thick lightweight on normal weight concrete wall. Wall may also be constructed of any UL Classified Concrete Blocks*. Max area of opening is 1024 in. sq (6606 cm2) with a max dimension of 32 in. (813 mm).
   See Concrete Blocks (CAZT) category in the Fire Resistance Directory for names of manufacturers.
2. Steel Duct — Nom 30 by 30 in. (762 by 762 mm) by No. 24 gauge (or heavier) galv steel duct. One steel duct to be positioned within the firestop system. The annular space shall be min 1/4 in. (6 mm) to max 1-3/4 in. (44 mm). Duct to be rigidly supported on both sides of floor or wall assembly.
3. Firestop System — The firestop system shall consist of the following:
   A. Packing Materials — Min 3-1/2 in. (89 mm) thickness of min 4 pcf (64 kg/m3) mineral wool batt insulation firmly packed into opening as a permanent form between the bare steel duct and the periphery of the opening. Packing material to be recessed from top surface of floor or both surfaces of wall as required to accommodate the required thickness of fill material.
   B. Fill, Void or Cavity Material* — Sealant — Min 1 in. (25 mm) thickness of fill material applied within the annulus, flush with top surface of floor or with both surfaces of wall.
   HILTI CONSTRUCTION CHEMICALS, DIV OF HILTI INC — CP 606 Flexible Firestop Sealant, FS-ONE Sealant or FS-ONE MAX Intumescent Sealant
4. Steel Retaining Angle — Nom 2 in. by 2 in. (51 by 51 mm) by No. 16 gauge (or heavier) steel angles attached to all four sides of the steel duct on the top surface or both surfaces of the wall. The angles shall be attached with No. 8 (or larger) steel sheet metal screws spaced max of 1 in. (25 mm) from each end and a max of 3 in. (76 mm) OC.

* Indicates such products shall bear the UL or cUL Certification Mark for jurisdictions employing the UL or cUL Certification (such as Canada), respectively.

Hilti Firestop Systems

Reproduced by HILTI, Inc. Courtesy of
Underwriters Laboratories, Inc.
January 14, 2015

System No. C-AJ-7084

Classified by Underwriters Laboratories, Inc. to UL 1479 and CAN/ULC-S115

ANSI/UL1479 (ASTM E814)	CAN/ULC S115
F Rating — 2 Hr	F Rating — 2 Hr
T Rating — 0 Hr	FT Rating — 0 Hr
	FH Rating — 2 Hr
	FTH Rating — 0 Hr

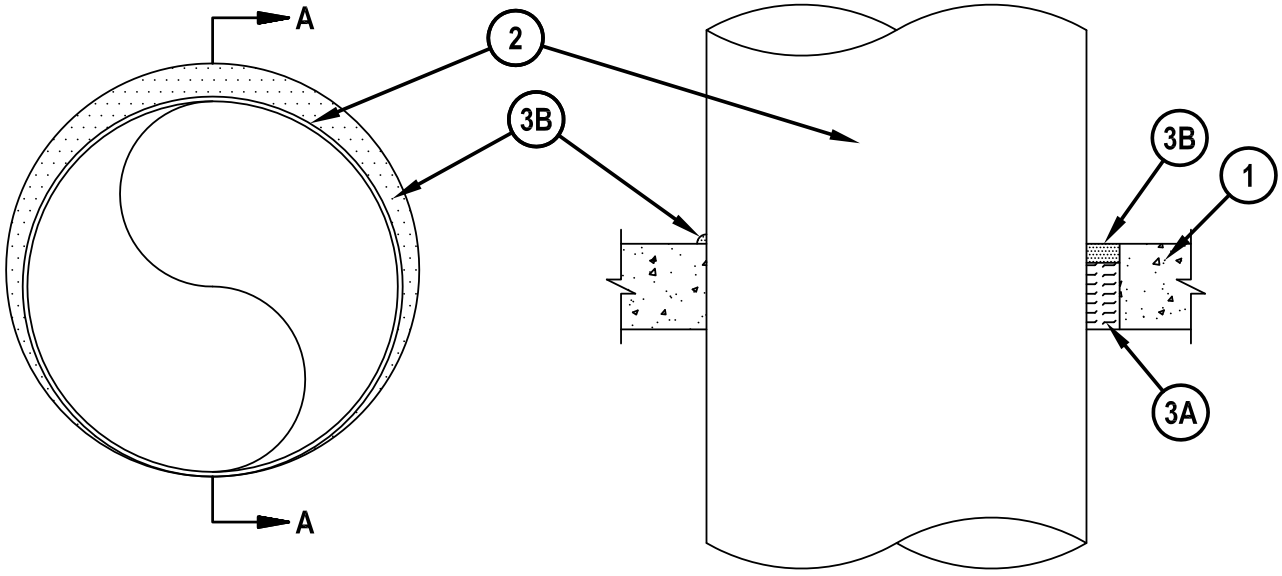

SECTION A-A

1. Floor or Wall Assembly — Min 4-1/2 in. (114 mm) thick reinforced lightweight or normal weight (100-150 pcf or 1600-2400 kg/m3) concrete. Wall may also be constructed of any UL Classified Concrete Blocks*. Max diam of opening is 21-3/4 in. (552 mm).
   See Concrete Blocks (CAZT) category in the Fire Resistance Directory for names of manufacturers.
2. Through Penetrant — Galv steel duct to be installed concentrically or eccentrically within the firestop system. The annular space between the duct and periphery of opening shall be 0 in. (point contact) and max 1-1/2 in. (38 mm). Duct to be rigidly supported on both sides of wall assembly.
   A. Spiral Wound HVAC Duct — Nom 20 in. (508 mm) diam (or smaller) No. 24 MSG (or heavier) galv steel spiral wound duct.
   B. Sheet Metal Duct — Nom 12 in. (305 mm) diam (or smaller) No. 28 MSG (or heavier) galv sheet steel duct.
3. Firestop System — The firestop system shall consist of the following:
   A. Packing Material — Min 3-1/2 in. (89 mm) thickness of min 4 pcf (64 kg/m3) mineral wool batt insulation firmly packed into opening as a permanent form. Packing material to be recessed from top surface of floor or both surfaces of wall to accommodate the required thickness of fill material.
   B. Fill, Void or Cavity Material*—Sealant — Min 1 in. (25 mm) thickness of fill material applied within annulus, flush with top surface of floor or both surfaces of wall assembly. At the point contact location between duct and periphery of opening, a min 1/2 in. (13 mm) diam bead of sealant shall be applied at the concrete/duct interface.
   HILTI CONSTRUCTION CHEMICALS, DIV OF HILTI INC — FS-ONE Sealant, FS-ONE MAX Intumescent Sealant, CP601S Elastomeric Firestop Sealant, CP606 Flexible Firestop Sealant, CP 604 Self-Leveling Firestop Sealant, CFS-S SIL GG Sealant or CFS-S SIL SL Sealant. (Note: CP 604 Self-Leveling Firestop Sealant and CFS-S SIL SL Sealant to be used on floor assemblies only.)

* Indicates such products shall bear the UL or cUL Certification Mark for jurisdictions employing the UL or cUL Certification (such as Canada), respectively.

Hilti Firestop Systems

Reproduced by HILTI, Inc. Courtesy of Underwriters Laboratories, Inc.
January 28, 2015

Classified by
Underwriters Laboratories, Inc.
to UL 1479 and CAN/ULC-S115

System No. C-AJ-7104

ANSI/UL1479 (ASTM E814)	CAN/ULC S115
F Rating — 2 Hr	F Rating — 2 Hr
T Rating — 1/4 Hr	FT Rating — 1/4 Hr
	FH Rating — 2 Hr
	FTH Rating — 1/4 Hr

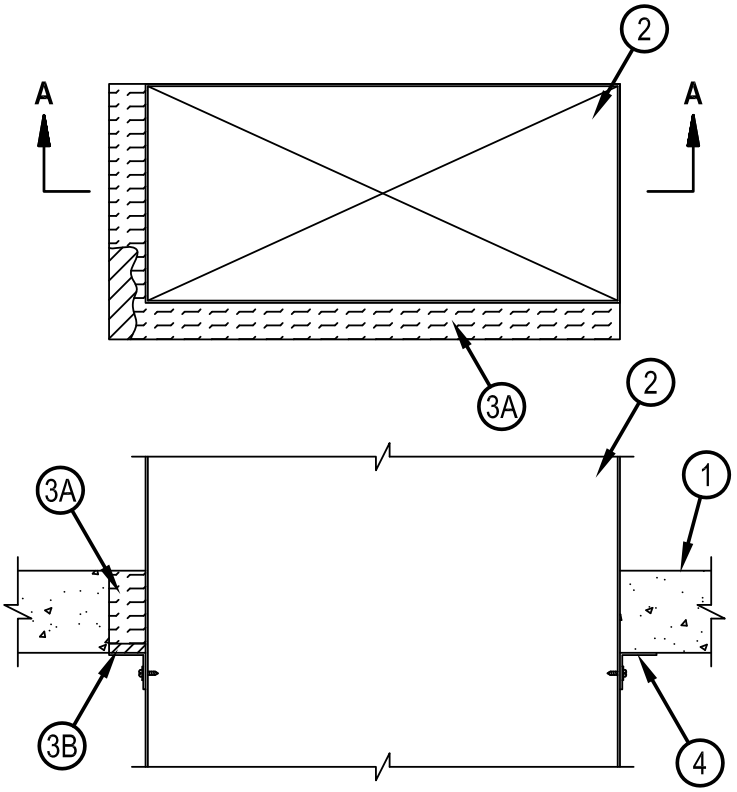

SECTION A-A

1. Floor or Wall Assembly — Min 4-1/2 in. (114 mm) thick reinforced lightweight or normal weight (100-150 pcf or 1600-2400 kg/m3) concrete. Wall may also be constructed of any UL Classified Concrete Blocks*. Max area of opening is 364 in2. (2348 cm2) with a max dimension of 26 in. (660 mm).
   See Concrete Blocks (CAZT) category in the Fire Resistance Directory for names of manufacturers.
2. Steel Duct — Max 24 in. by 12 in. (610 by 305 mm) by No. 24 gauge (or heavier) galv steel duct. One steel duct to be positioned within the firestop system. The annular space shall be min 0 in. (point of contact max two adjacent sides) to max 2 in. (51 mm). Duct to be rigidly supported on both sides of floor or wall assembly.

Reproduced by HILTI, Inc. Courtesy of
Underwriters Laboratories, Inc.
January 14, 2015

System No. C-AJ-7104

3. Firestop System — The firestop system shall consist of the following:
   A. Packing Materials — Min 4 in. (102 mm) thickness of min 4 pcf (64 kg/m3) mineral wool batt insulation firmly packed into opening as a permanent form between the bare steel duct and the periphery of the opening. Packing material to be recessed from top surface of floor or both surfaces of wall as required to accommodate the required thickness of fill material.
   B. Fill, Void or Cavity Material* — Sealant — Min 1/2 in. (13 mm) thickness of fill material applied within the annulus, flush with bottom surface of floor or with both surfaces of wall. Min 1/2 in. (13 mm) diam bead of sealant along point of contact.
   HILTI CONSTRUCTION CHEMICALS, DIV OF HILTI INC — FS-ONE Sealant or FS-ONE MAX Intumescent Sealant.
   4. Steel Retaining Angles — Nom 2 by 2 in. (51 by 51 mm) by No. 18 gauge (or heavier) steel angles attached to steel duct on all four sides on the bottom surface of floor or both surfaces of wall. The angles shall be attached to the duct with No. 8 (or larger) steel sheet metal screws spaced max of 6 in. (152 mm).

* Indicates such products shall bear the UL or cUL Certification Mark for jurisdictions employing the UL or cUL Certification (such as Canada), respectively.

Reproduced by HILTI, Inc. Courtesy of
Underwriters Laboratories, Inc.
January 14, 2015

Classified by
Underwriters Laboratories, Inc.
to UL 1479 and CAN/ULC-S115

System No. C-AJ-7111

ANSI/UL1479 (ASTM E814)	CAN/ULC S115
F Rating — 2 Hr	F Rating — 2 Hr
T Rating — 0 Hr	FT Rating — 0 Hr
	FH Rating — 2 Hr
	FTH Rating — 0 Hr

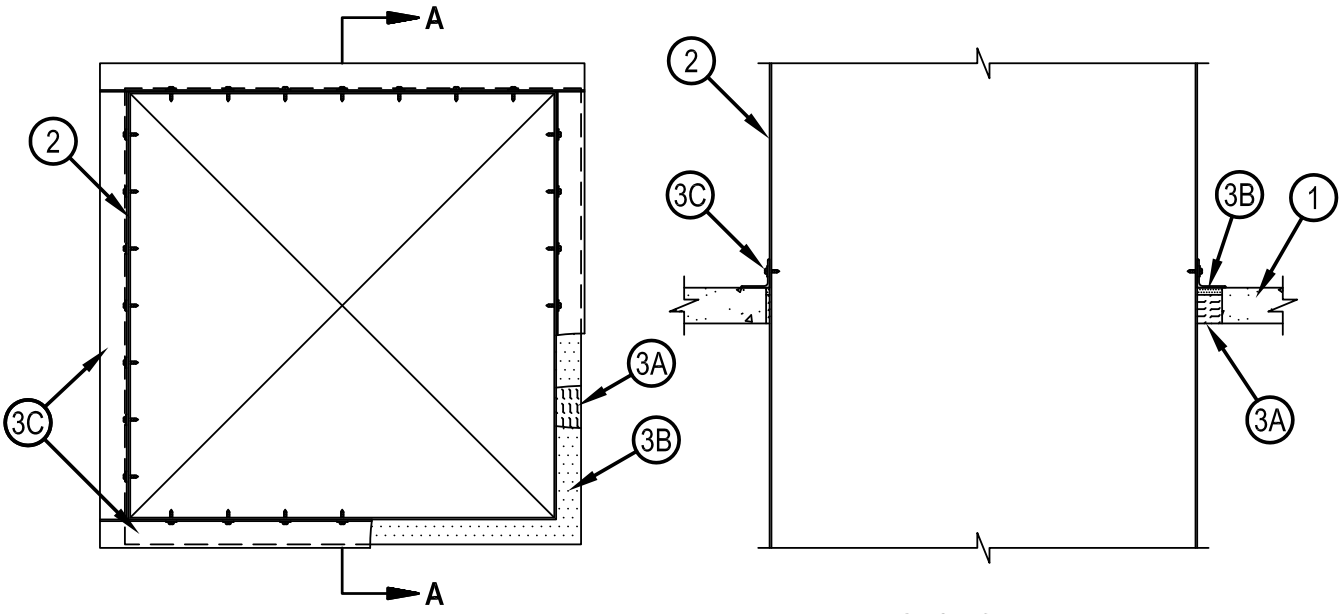

SECTION A-A

1. Floor or Wall Assembly — Min 2-1/2 in. (64 mm) thick reinforced lightweight or normal weight (100-150 pcf or 1600-2400 kg/m3) concrete floor or min 3 in. (76 mm) thick reinforced lightweight or normal weight (100-150 pcf or 1600-2400 kg/m3) concrete wall. Wall may also be constructed of any UL Classified Concrete Blocks*. Max area of opening is 7.1 sq ft (0.66 m2) with max dimension of 32 in. (813 mm).
   See Concrete Blocks (CAZT) category in the Fire Resistance Directory for names of manufacturers.
2. Steel Duct — Max 30 by 30 in. (762 by 762 mm) No. 24 gauge (or heavier) steel duct. One duct to be installed within the firestop system with a min 1/4 in. (6 mm) to max 1-3/4 in. (44 mm) annular space. Steel duct to be rigidly supported on both sides of floor or wall assembly.
3. Firestop System — The firestop system shall consist of the following:
   A. Packing Material — Min 2 in. (51 mm) thickness of min 4 pcf (64 kg/m3) mineral wool batt insulation firmly packed into opening as a permanent form. Packing material to be recessed from top surface of floor or from both surfaces of wall as required to accommodate the required thickness of fill material.
   B. Fill, Void or Cavity Material* — Sealant — Min 1/2 in. (13 mm) thickness of fill material applied within the annulus, flush with top surface of floor or with both surfaces of wall.
   HILTI CONSTRUCTION CHEMICALS, DIV OF HILTI INC — FS-One Sealant or FS-ONE MAX Intumescent Sealant.
   C. Steel Angle — Min 2 in. (51 mm) wide by 2 in. (51 mm) high No. 16 gauge (or heavier) steel angle cut to fit the contour of the duct with a min 1/4 in. (6 mm) lap on the top surface of floor or on both surfaces of wall on all sides of the opening. Legs of angles secured to duct with No. 8 by 3/4 in. (19 mm) long steel sheet metal screws spaced max 4 in. (102 mm) OC.

* Indicates such products shall bear the UL or cUL Certification Mark for jurisdictions employing the UL or cUL Certification (such as Canada), respectively.

Hilti Firestop Systems

Reproduced by HILTI, Inc. Courtesy of
Underwriters Laboratories, Inc.
January 14, 2015

System No. W-L-7042

Classified by Underwriters Laboratories, Inc. to UL 1479 and CAN/ULC-S115

ANSI/UL1479 (ASTM E814)	CAN/ULC S115
F Ratings - 1 and 2 Hr (See Items 1 and 3)	F Ratings - 1 and 2 Hr (See Items 1 and 3)
T Rating - 0 Hr	FT Rating - 0 Hr
	FH Ratings - 1 and 2 Hr (See Items 1 and 3)
	FTH Rating - 0 Hr

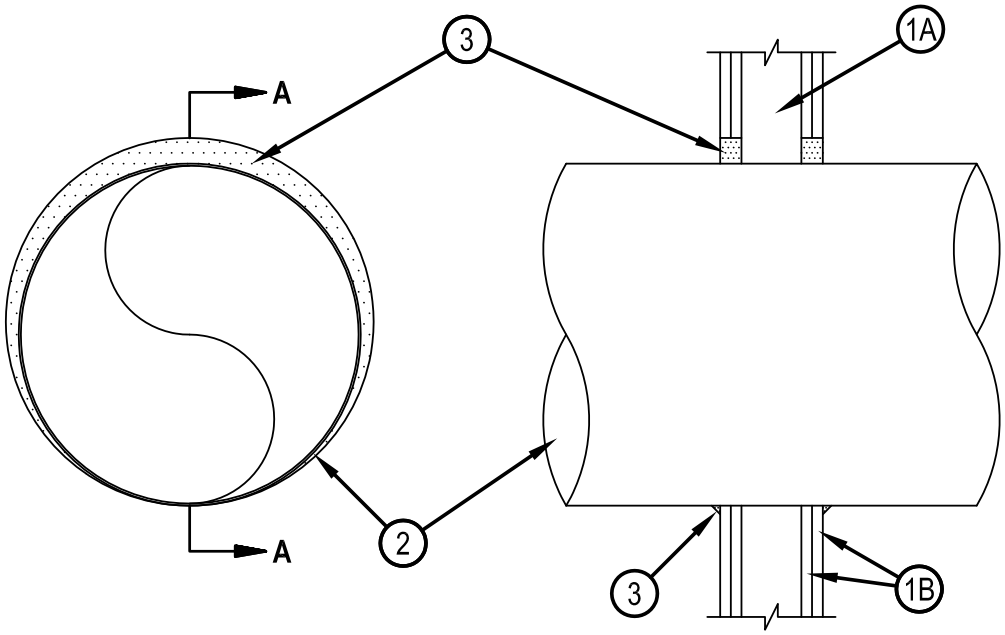

SECTION A-A

1. Wall Assembly — The 1 or 2 hr fire rated wallboard/stud wall assembly shall be constructed of the materials and in the manner specified in the individual U300, U400, V400 or W400 Series Wall and Partition Designs in the UL Fire Resistance Directory and shall include the following construction features.
   A. Studs — Wall framing may consist of either wood studs or steel channel studs. Wood studs to consist of nom 2 by 4 in. (51 by 102 mm) lumber spaced 16 in. (406 mm) OC. Steel studs to be min 2-1/2 in. (64 mm) wide and spaced 24 in. (610 mm) OC.
   B. Gypsum Board* — For 1 hr assembly, one layer of min 5/8 in. (16 mm) thick wallboard as required in the individual Wall and Partition Design. For 2 hr assembly, two layers of min 5/8 in. (16 mm) thick wallboard as required in the individual Wall and Partition Design. Max diam of opening is 14-1/2 in. (368 mm) for wood stud walls and 21-3/4 in. (552 mm) for steel stud walls.

   The hourly F and FH Ratings of the firestop system are equal to the hourly fire rating of the wall assembly in which it is installed.
2. Through Penetrant — Galv steel duct to be installed concentrically or eccentrically within the firestop system. The annular space between the duct and periphery of opening shall be 0 in. (0 mm, point contact) and max 1-1/2 in. (64 mm) Duct to be rigidly supported on both sides of wall assembly.
   A. Spiral Wound HVAC Duct — Nom 20 in. (502 mm) diam (or smaller) No. 24 MSG (or heavier) galv steel spriral wound duct.
   B. Sheet Metal Duct — Nom 12 in. (305 mm) diam (or smaller) No. 28 MSG (or heavier) galv sheet steel duct.
3. Fill, Void or Cavity Material*—Sealant — Min 5/8 in. (16 mm) and 1-1/4 in. (32 mm) thickness of fill material applied within annulus, flush with both surfaces of wall assembly for 1 or 2 hr rated walls, respectively. At the point contact location between duct and wallboard, a min 1/2 in. (13 mm) diam bead of sealant shall be applied at the wallboard/duct interface on both surfaces of wall assembly.
   HILTI CONSTRUCTION CHEMICALS, DIV OF HILTI INC — CP601S Elastomeric Firestop Sealant, FS-ONE Sealant, FS-ONE MAX Intumescent Sealant or CP606 Flexible Firestop Sealant

* Indicates such products shall bear the UL or cUL Certification Mark for jurisdictions employing the UL or cUL Certification (such as Canada), respectively.

Hilti Firestop Systems

Reproduced by HILTI, Inc. Courtesy of Underwriters Laboratories, Inc.
January 27, 2015

Classified by
Underwriters Laboratories, Inc.
to UL 1479 and CAN/ULC-S115

System No. W-J-7109

ANSI/UL1479 (ASTM E814)	CAN/ULC S115
F Rating — 2 Hr	F Rating — 2 Hr
T Rating — 0 Hr	FT Rating — 0 Hr
L Rating At Ambient — Less Than 1 CFM/sq ft	FH Rating — 2 Hr
L Rating At 400 F — Less Than 1 CFM/sq ft	FTH Rating — 0 Hr
	L Rating At Ambient — Less Than 1 CFM/sq ft
	L Rating At 400 F — Less Than 1 CFM/sq ft

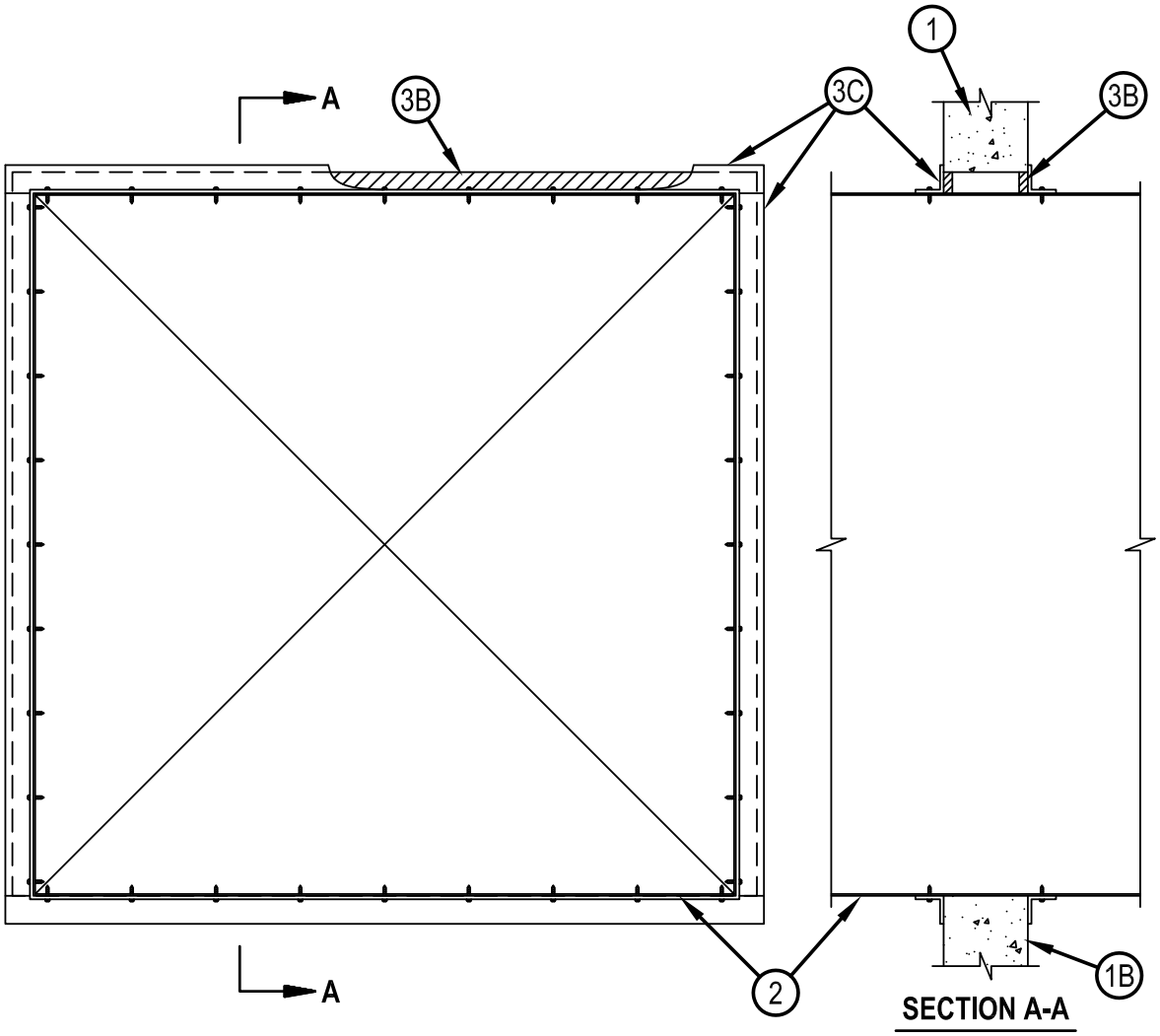

1. Wall Assembly — Min 6 in. (152 mm) thick reinforced lightweight or normal weight (100-150 pcf or 1600-2400 kg/m³) concrete. Wall may also be constructed of any UL Classified Concrete Blocks*. Max area of opening is 73.7 sq ft (6.85 m2) with a max dimension of 104 in. (2.64 m). See Concrete Blocks (CAZT) category in the Fire Resistance Directory for names of manufacturers.

Hilti Firestop Systems

Reproduced by HILTI, Inc. Courtesy of
Underwriters Laboratories, Inc.
January 23, 2015

System No. W-J-7109

2. Steel Duct — Max 100 in. by 100 in. (2.5 by 2.5 m) galv steel duct to be installed either concentrically or eccentrically within the firestop system. The duct shall be constructed and reinforced in accordance with SMACNA construction standards. The space between the steel duct and periphery of opening shall be min 0 in. (point contact) to max 2 in. (51 mm). Steel duct to be rigidly supported on both sides of the wall assembly.
3. Firestop System — The firestop system shall consist of the following:
   A. Packing Material — (Optional, Not Shown) — Polyethylene backer rod, mineral wool batt insulation or fiberglass batt insulation friction fitted into annular space. Packing material to be recessed from both surfaces of wall to accommodate the required thickness of fill material.
   A1. Packing Material — Required as specified in Table below. Min 3-3/4 in. (95 mm) thickness of min 4 pcf (64 kg/m³) mineral wool batt insulation firmly packed into opening as a permanent form. Packing material to be recessed from both surfaces of wall to accommodate the required thickness of fill material.
   B. Fill, Void or Cavity Material* — Sealant — Min 5/8 in. (16 mm) thickness of fill material applied within the annulus, flush with both surfaces of wall. Min 1/4 in. (6 mm) diam bead of fill material shall be applied at the point contact location between the steel duct and the wall.
   HILTI CONSTRUCTION CHEMICALS, DIV OF HILTI INC — FS-ONE Sealant or FS-ONE MAX Intumescent Sealant or CP606
   C. Steel Retaining Angles — Min No. 16 gauge galv steel angles sized to lap steel duct a min of 2 in. (51 mm) and to lap wall surfaces a min of 1 in. (25 mm). When max duct dimension does not exceed 48 in. and duct area does not exceed 1300 in2, angles may be min No. 18 gauge galv steel. Angles attached to steel duct on both sides of wall with min No. 10 by 1/2 in. (13 mm) long steel sheet metal screws located a max of 1 in. (25 mm) from each end of steel duct and spaced a max of 6 in. (152 mm) OC. Steel angles are optional for those sides of duct that do not exceed the dimension specified in Table below, dependent on packing material and annular space as specified.

Max Duct Dimension	Duct Thickness	Annular Space	Packing Material	Angle (Item 3C) Required
24 in. (610 mm)	24 ga or heavier	1/2 in. min to 1 in. max (13 to 25 mm)	Item 3A1	No

* Indicates such products shall bear the UL or cUL Certification Mark for jurisdictions employing the UL or cUL Certification (such as Canada), respectively.

Reproduced by HILTI, Inc. Courtesy of
Underwriters Laboratories, Inc.
January 23, 2015

Classified by
Underwriters Laboratories, Inc.
to UL 1479 and CAN/ULC-S115

System No. W-L-7155

ANSI/UL1479 (ASTM E814)	CAN/ULC S115
F Ratings — 1 and 2 Hr (See Item 1)	F Ratings — 1 and 2 Hr (See Item 1)
T Ratings — 0 Hr	FT Ratings — 0 Hr
L Rating at Ambient — Less Than 1 CFM/sq ft	FH Ratings — 1 and 2 Hr (See Item 1)
L Rating at 400 F — Less Than 1 CFM/sq ft	FTH Ratings — 0 Hr
	L Rating at Ambient — Less Than 1 CFM/sq ft
	L Rating at 400 F — Less Than 1 CFM/sq ft

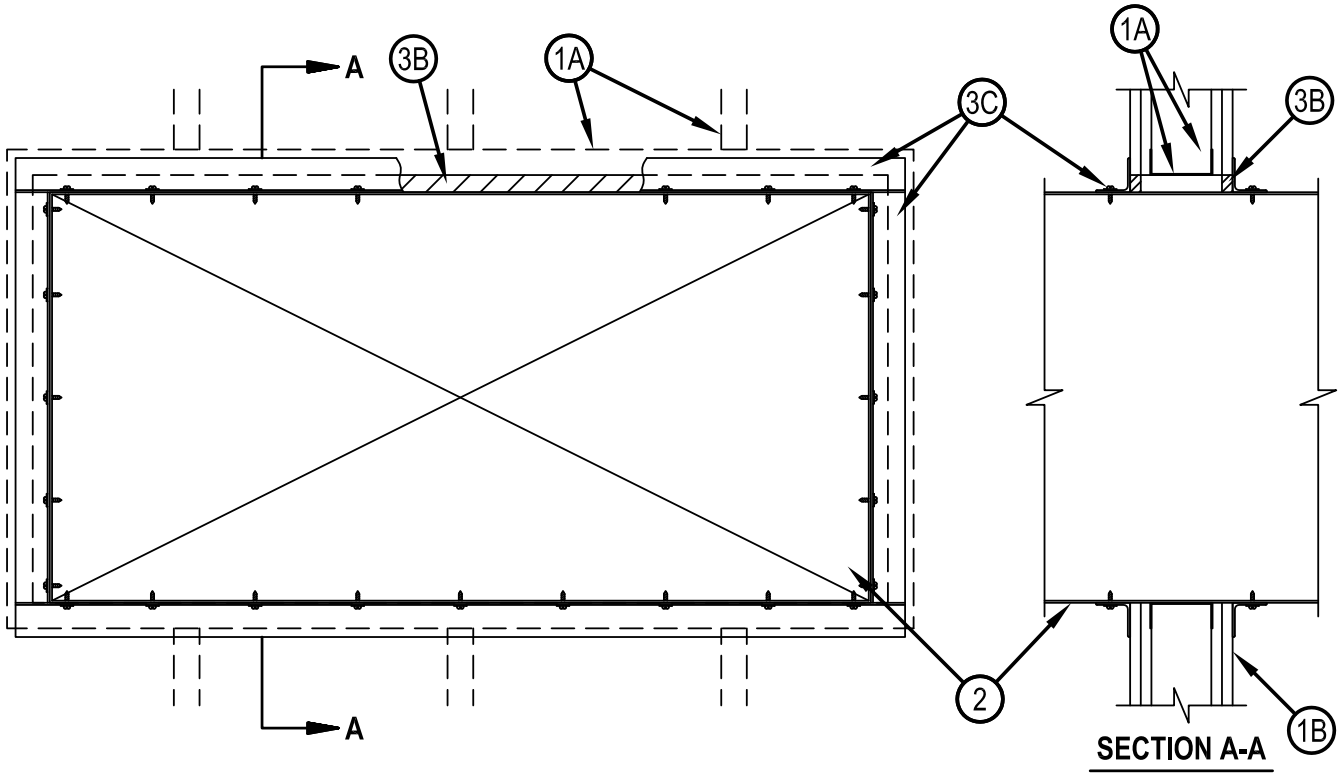

1. Wall Assembly — The 1 or 2 hr fire-rated gypsum wallboard/stud wall assembly shall be constructed of the materials and in the manner described in the individual U400, V400 or W400 Series Wall or Partition Design in the UL Fire Resistance Directory and shall include the following construction features:
   A. Studs — Wall framing shall consist of min 3-1/2 in. (89 mm) wide steel channel studs spaced max 24 in. (610 mm) OC. Additional steel studs shall be used to completely frame the opening.
   B. Gypsum Board* — 5/8 in. (16 mm) thick, 4 ft (1.22 m) wide with square or tapered edges. The gypsum board type, thickness, number of layers, fastener type and sheet orientation shall be as specified in the individual Wall and Partition Design in the UL Fire Resistance Directory. Max area of opening is 73.7 sq ft (6.85 m2) with a max dimension of 104 in. (2.64 m).
   The hourly F and FH Ratings of the firestop system are equal to the hourly fire rating of the wall assembly in which it is installed.
2. Steel Duct — Max 100 in. by 100 in. (2.5 by 2.5 m) galv steel duct to be installed either concentrically or eccentrically within the firestop system. The duct shall be constructed and reinforced in accordance with SMACNA construction standards. The space between the steel duct and periphery of opening shall be min 0 in. (point contact) to max 2 in. (51 mm). Steel duct to be rigidly supported on both sides of the wall assembly.

Reproduced by HILTI, Inc. Courtesy of
Underwriters Laboratories, Inc.
January 27, 2015

System No. W-L-7155

2A1. Through-Pentrating Product* — As an alterate to Item 2. Fiber cement with galvanized steel facing, 3/8 in.(10 mm) thick composite metallic duct, with a max cross-sectional area of 43.0 sq ft, (4 m2) and a max individual dimension of 78 3/4 in. (2 m). Duct to be installed either concentrically or eccentrically within the firestop system such that the annular space is min 0 in. (point contact) to max 2 in. (51 mm). Duct to be rigidly supported on both sides of wall assembly. Refer to Ventilation Duct Assemblies in Vol. 2 of the Fire Resistance Directory.
DURASYSTEMS BARRIERS INC — Type DuraDuct HP.

2A2. Through-Pentrating Product* — As an alternate to Item 2. Fiber cement with galvanized steel facing, 1/4 in. (6 mm) thick, with a max cross-sectional area of 1764 sq in. (1.14 m2), and a max individual dimension of 42 in. (1067 mm). Duct to be installed either concentrically or eccentrically within the firestop system such that the annular space is min 0 in. (point contact) to max 2 in. (51 mm). Duct to be rigidly supported on both sides of wall assembly and installed in accordance. Refer to Ventilation Duct Assemblies in Vol. 2 of the Fire Resistance Directory.
DURASYSTEMS BARRIERS INC — Type DuraDuct SD.

2A3. Through-Pentrating Product* — As an alternate to Item 2. Galvanized steel faced duct panel, with a max cross-sectional area of 2450 sq in. (1.58 m2), and a max individual dimension of 49-1/2 in. (1258 mm) Duct to be installed either concentrically or eccentrically within the firestop system such that the annular space is min 0 in. (point contact) to max 2 in. (51 mm). Duct to be rigidly supported on both sides wall assembly. Refer to Ventilation Duct Assemblies in Vol. 2 of the Fire Resistance Directory.
DURASYSTEMS BARRIERS INC — Type DuraDuct GNX.

3 Firestop System — The firestop system shall consist of the following:

A. Packing Material — (Optional, Not Shown) — Polyethylene backer rod, mineral wool batt insulation or fiberglass batt insulation friction fitted into annular space. Packing material to be recessed from both surfaces of wall to accommodate the required thickness of fill material.

A1. Packing Material — Required as specified in Table below. Min 3-3/4 in. (95 mm) or 5 in. (127 mm) thickness of min 4 pcf (64 kg/m3) mineral wool batt insulation firmly packed into opening as a permanent form for 1 and 2 hr rated assemblies, respectively. Packing material to be recessed from both surfaces of wall to accommodate the required thickness of fill material.

B. Fill, Void or Cavity Material* — Sealant — Min 5/8 in. (16 mm) thickness of fill material applied within the annulus, flush with both surfaces of wall. Min 1/4 in. (6 mm) diam bead of fill material shall be applied at the point contact location between the steel duct and the gypsum board.
HILTI CONSTRUCTION CHEMICALS, DIV OF HILTI INC — CFS-S SIL GG Sealant, FS-ONE Sealant, FS-ONE MAX Intumescent Sealant or CP606 Flexible Firestop Sealant

C. Steel Retaining Angles — Min No. 16 gauge galv steel angles sized to lap steel duct a min of 2 in. (51 mm) and to lap wall surfaces a min of 1 in. (25 mm). When max duct dimension does not exceed 48 in. (122 cm) and duct area does not exceed 1300 in2 (8387 cm2), angles may be min No. 18 gauge galv steel. Angles attached to steel duct on both sides of wall with min No. 10 by 1/2 in. (13 mm) long steel sheet metal screws located a max of 1 in. (25 mm) from each end of steel duct and spaced a max of 6 in. (152 mm) OC. Steel angles are optional for those sides of duct that do not exceed the dimension specified in Table below, dependent on packing material, sealant and annular space as specified.

Max Duct Dimension	Duct Thickness	Annular Space	Packing Material	Angle (Item 3C) Required
24 in. (610 mm)	24 ga or heavier	1/2 in. min to 1 in. max (13 to 25 mm)	Item 3A1	No

* Indicates such products shall bear the UL or cUL Certification Mark for jurisdictions employing the UL or cUL Certification (such as Canada), respectively.

Reproduced by HILTI, Inc. Courtesy of
Underwriters Laboratories, Inc.
January 27, 2015

System No. W-J-7029

Classified by Underwriters Laboratories, Inc. to UL 1479 and CAN/ULC-S115

ANSI/UL1479 (ASTM E814)	CAN/ULC S115
F Rating — 1 and 2 Hr	F Rating — 1 and 2 Hr
T Rating — 1/2 and 3/4 Hr	FT Rating — 1/2 and 3/4 Hr
	FH Rating — 1 and 2 Hr
	FTH Rating — 1/2 and 3/4 Hr

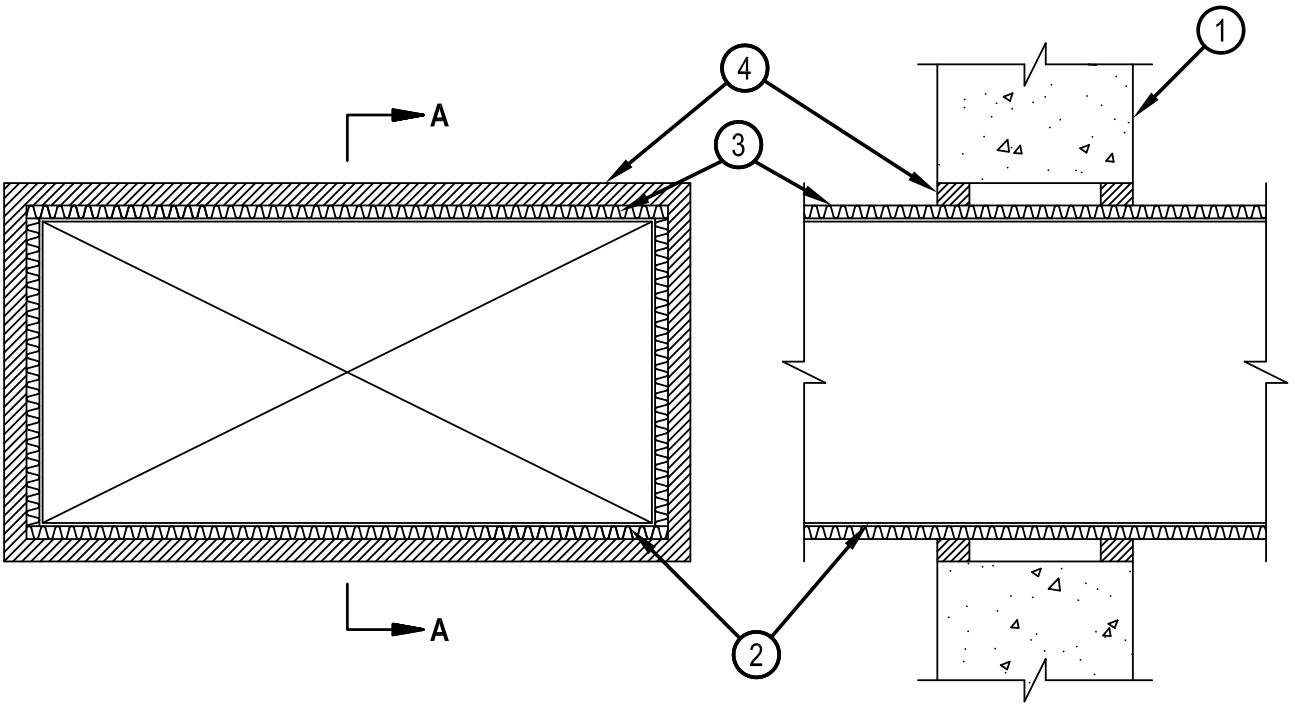

SECTION A-A

1. Wall Assembly — Min 5 in. (127 mm) thick reinforced lightweight or normal weight (100-150 pcf or 1600-2400 kg/m3) concrete. Wall may also be constructed of any UL Classified Concrete Blocks*. Max area of opening is 395 sq in. with max dimensions of 26-3/4 in. (679 mm).
   See Concrete Blocks (CAZT) category in the Fire Resistance Directory for names of manufacturers.
2. Steel Duct — Nom 24 in. by 12 in. (610 by 305 mm) (or smaller) No. 24 gauge (or heavier) steel duct to be installed eccentrically within the opening. The annular space shall be min 1 in. (25 mm) to max 1-3/4 in. (44 mm). Steel duct to be rigidly supported on both sides of wall assembly.
3. Batt and Blanket* — Max 1-1/2 in. (38 mm) thick glass fiber batt or blanket (min 3/4 pcf or 12 kg/m3) jacketed on the outside with a foil-scrim-kraft facing. Longitudinal and transverse joints sealed with aluminum foil tape. During the installation of the fill material, the batt or blanket shall be compressed 50% such that the annular space within the firestop system shall be min 1/4 in. (6 mm) to max 1 in. (25 mm).
   See Batts and Blankets (BKNV) category in the Building Materials Directory for names of manufacturers. Any batt or blanket meeting the above specifications and bearing the UL Classification Marking with a Flame Spread Index of 25 or less and a Smoke Developed Index 50 or less may be used.
4. Fill, Void or Cavity Material* - Sealant — Min 5/8 in. (16 mm) or 1-1/4 in. (32 mm) thickness of fill material applied within annulus, flush with both surfaces of wall for 1 or 2 hr walls, respectively. If voids develops after the fill material cures, the voids shall be sealed with additional fill material.

HILTI CONSTRUCTION CHEMICALS, DIV OF HILTI INC — FS-ONE Sealant or FS-ONE MAX Intumescent Sealant

* Indicates such products shall bear the UL or cUL Certification Mark for jurisdictions employing the UL or cUL Certification (such as Canada), respectively.

Hilti Firestop Systems

Reproduced by HILTI, Inc. Courtesy of Underwriters Laboratories, Inc.
January 23, 2015

System No. W-J-7112

Classified by Underwriters Laboratories, Inc. to UL 1479 and CAN/ULC-S115

ANSI/UL1479 (ASTM E814)	CAN/ULC S115
F Rating — 2 Hr	F Rating — 2 Hr
T Rating — 0 Hr	FT Rating — 0 Hr
	FH Rating — 2 Hr
	FTH Rating — 0 Hr

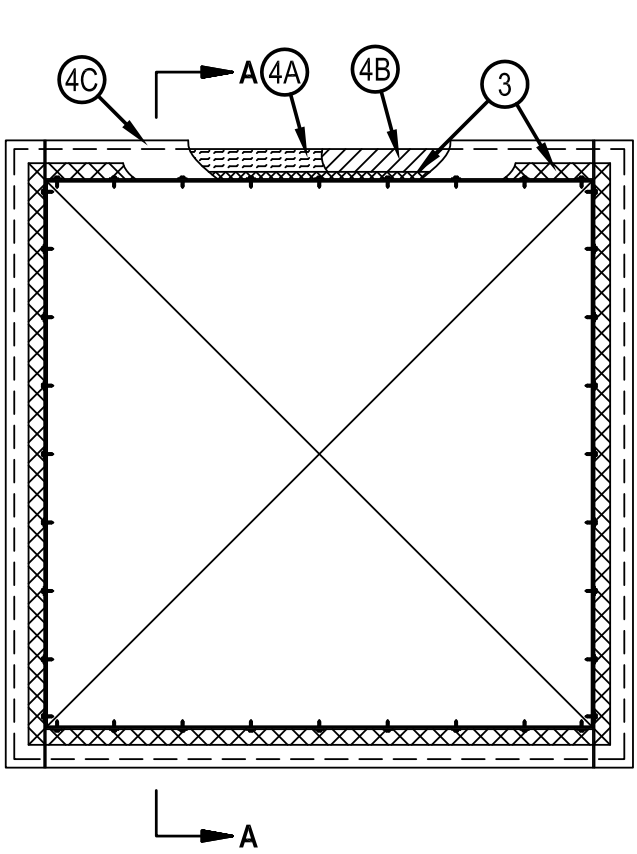

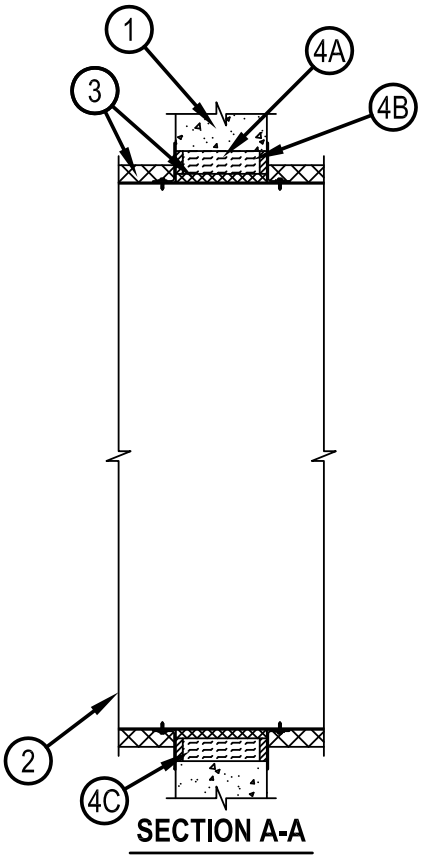

1. Wall Assembly — Min 6 in. (152 mm) thick reinforced lightweight or normal weight 100-150 pcf (1600-2400 kg/m³) concrete. Wall may also be constructed of any UL Classified Concrete Blocks*. Max area of opening is 76.2 sq ft. (7 m²) with a max width of 105-1/2 in. (2.7 m).
   See Concrete Blocks (CAZT) category in the Fire Resistance Directory for names of manufacturers.
2. Steel Duct — Max 100 by 100 in. (2.5 by 2.5 m) steel duct to be installed within the framed opening. The duct shall be constructed and reinforced in accordance with SMACNA construction standards. Steel duct to be rigidly supported on both sides of wall assembly.
3. Batts and Blankets* — Nom 1-1/2 or 2 in. (38 or 51 mm) thick glass fiber batt or blanket (min 3/4 pcf or 12 kg/m³) jacketed on the outside with a foil-scrim-kraft facing. Longitudinal and transverse joints sealed with aluminum foil tape. During the installation of the fill material, the batt or blanket shall be compressed minimum 50% such that the annular space within the firestop system shall be min 1/2 in. (13 mm) to max 2 in. (51 mm).
   See Batts and Blankets (BKNV) category in the Building Materials Directory for names of manufacturers. Any batt or blanket meeting the above specifications and bearing the UL Classification Marking with a Flame Spread Index of 25 or less and a Smoke Developed Index 50 or less may be used.

Reproduced by HILTI, Inc. Courtesy of Underwriters Laboratories, Inc.
January 23, 2015

System No. W-J-7112

4. Firestop System — The firestop system shall consist of the following:
   A. Packing Material — Min 4 pcf (64 kg/m³) mineral wool batt insulation firmly packed into opening as a permanent form. Packing material to be recessed from both surfaces of wall to accommodate the required thickness of fill material.
   B. Fill, Void or Cavity Material* — Sealant — Min 5/8 in. (16 mm) thickness of fill material applied within annulus, flush with both surfaces of wall. HILTI CONSTRUCTION CHEMICALS, DIV OF HILTI INC — FS-ONE Sealant or FS-ONE MAX Intumescent Sealant
   C. Steel Retaining Angles — Min No. 16 gauge (0.059 in. or 1.5 mm) galv steel angles sized to lap steel duct a min of 1 in. (25 mm) and lap wall surfaces a min of 2 in. (51 mm). Angles attached to steel duct on both sides of wall with min No. 10 steel sheet metal screws spaced a max of 1 in. (25 mm) from each end of steel duct and spaced a max of 6 in. (152 mm) OC. When max duct dimension does not exceed 48 in. (122 cm) and duct area does not exceed 1300 in² (8387 cm²), angles may be min No. 18 gauge galv steel. Angles attached to steel duct on both sides of wall with min No. 10 by 1/2 in. (13 mm) long steel sheet metal screws located a max of 1 in. (25 mm) from each end of steel duct and spaced a max of 6 in. (152 mm) OC. When max 1-1/2 in. (38 mm) thick insulation is used, steel angles are optional for those sides of duct that do not exceed the dimension specified in Table below, dependent on packing material and annular space as specified.

Max Duct Dimension	Duct Thickness	Annular Space	Packing Material	Angle (Item 3C) Required
24 in. (610 mm)	24 ga or heavier	1/2 in. min to 1 in. max (13 to 25 mm)	Item 3A1	No

* Indicates such products shall bear the UL or cUL Certification Mark for jurisdictions employing the UL or cUL Certification (such as Canada), respectively.

Reproduced by HILTI, Inc. Courtesy of
Underwriters Laboratories, Inc.
January 23, 2015

Classified by
Underwriters Laboratories, Inc.
to UL 1479 and CAN/ULC-S115

System No. W-L-7059

ANSI/UL1479 (ASTM E814)	CAN/ULC S115
F Ratings - 1 and 2 Hr (See Item 1)	F Ratings - 1 and 2 Hr (See Item 1)
T Rating - 1/2 and 3/4 Hr (See Item 1)	FT Rating - 1/2 and 3/4 Hr(See Item 1)
	FH Ratings - 1 and 2 Hr (See Item 1)
	FTH Rating - 1/2 and 3/4 Hr (See Item 1)

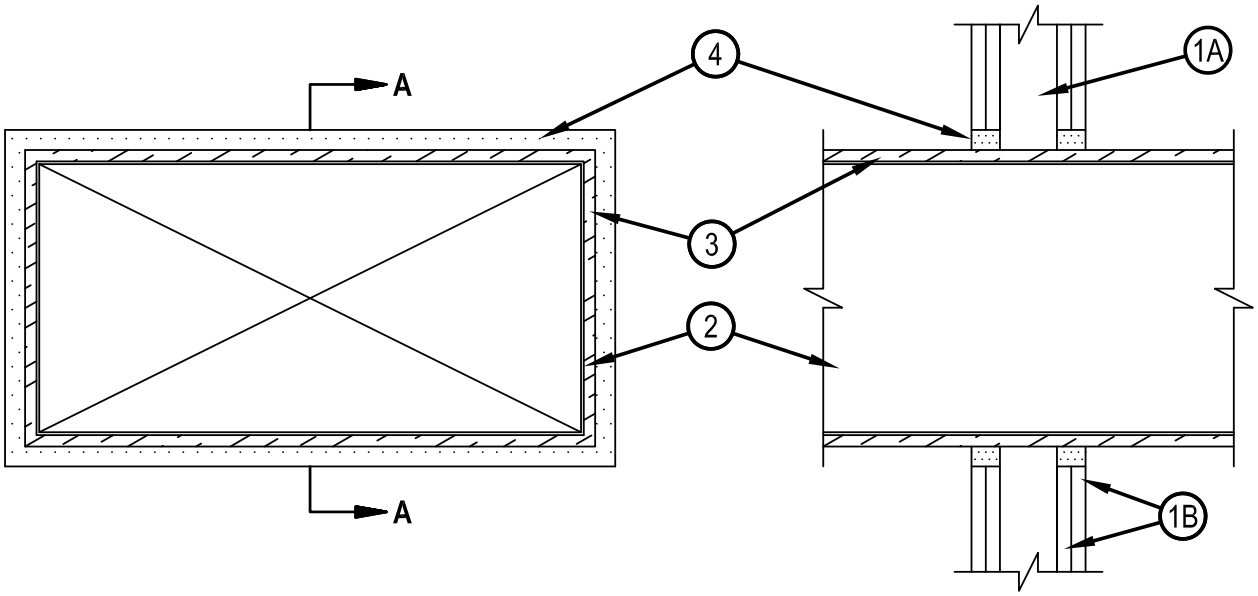

SECTION A-A

1. Wall Assembly — The 1 or 2 hr fire-rated gypsum wallboard/stud wall assembly shall be constructed of the materials and in the manner described in the individual U400, V400 or W400 Series Wall or Partition Design in the UL Fire Resistance Directory and shall include the following construction features:
   A. Studs — Wall framing shall consist of channel studs. Steel studs to be min 2-1/2 in. (64 mm) wide and spaced max 24 in. (610 mm) OC. The opening in the wall to accommodate the steel duct (Item 2) shall be framed on all sides using lengths of studs installed between the vertical studs and attached to the studs at each end. The framed opening in the wall shall be a nom 6 in. (152 mm) wide and 12 in. (305 mm) higher than the width and height of the steel duct.
   B. Wallboard, Gypsum* — 5/8 in. (16 mm) thick, 4 ft (1.22 mm) wide with square or tapered edges. The gypsum wallboard type, thickness, number of layers, fastener type and sheet orientation shall be as specified in the individual U300, U400, V400 or W400 Series Design in the UL Fire Resistance Directory. Max area of opening is 395 sq. in. (0.25 m2)with max dimensions of 26-3/4 in. (679 mm) for steel studs. The hourly F and FH Ratings of the firestop system are equal to the hourly fire rating of the wall assembly in which it is installed. The hourly T, FT and FTH Ratings are 1/2 hr and 3/4 hr for 1 and 2 hr rated assemblies, respectively

Reproduced by HILTI, Inc. Courtesy of
Underwriters Laboratories, Inc.
January 27, 2015

System No. W-L-7059

2. Steel Duct — Nom 24 in. by 12 in. (610 by 305 mm) (or smaller) No. 24 gauge (or heavier) steel duct to be installed eccentrically within the framed opening. The annular space shall be min 1 in. (25 mm) to max 1-3/4 in. (45 mm) Steel duct to be rigidly supported on both sides of wall assembly.
3. Batts and Blankets* — Max 1-1/2 in. (38 mm) thick glass fiber batt or blanket (min 3/4 pcf or 12 kg/m3) jacketed on the outside with a foil-scrim-kraft facing. Longitudinal and transverse joints sealed with aluminum foil tape. During the installation of the fill material, the batt or blanket shall be compressed 50% such that the annular space within the firestop system shall be min 1/4 in. (6 mm) to max 1 in. (25 mm). See Batts and Blankets - (BKNV) category in the Building Materials Directory for names of manufacturers. Any batt or blanket meeting the above specifications and bearing the UL Classification Marking with a Flame Spread Index of 25 or less and a Smoke Developed Index 50 or less may be used.
4. Fill, Void or Cavity Material* - Sealant — Min 5/8 in. or 1-1/4 in. (16 or 32 mm) thickness of fill material applied within annulus, flush with both surfaces of wall for 1 or 2 hr walls, respectively. If voids develop after the fill materials cures, the voids shall be sealed with additional fill material.
   HILTI CONSTRUCTION CHEMICALS, DIV OF HILTI INC — FS-ONE Sealant or FS-ONE MAX Intumescent Sealant

* Indicates such products shall bear the UL or cUL Certification Mark for jurisdictions employing the UL or cUL Certification (such as Canada), respectively.

Reproduced by HILTI, Inc. Courtesy of
Underwriters Laboratories, Inc.
January 27, 2015

Customer Hotline: Hong Kong 8228 8118, Macau 00800 8228 8118 Email: hksales@hilti.com

System No. W-L-7153

Classified by Underwriters Laboratories, Inc. to UL 1479 and CAN/ULC-S115

ANSI/UL1479 (ASTM E814)	CAN/ULC S115
F Ratings - 1 and 2 Hr (See Item 1)	F Ratings - 1 and 2 Hr (See Item 1)
T Rating - 1/2 Hr	FT Rating - 1/2 Hr
	FH Ratings - 1 and 2 Hr (See Item 1)
	FTH Rating - 1/2 Hr

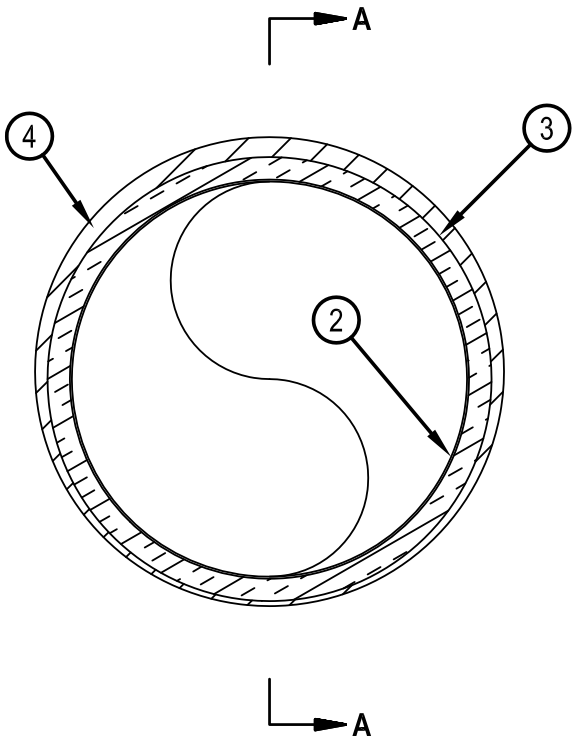

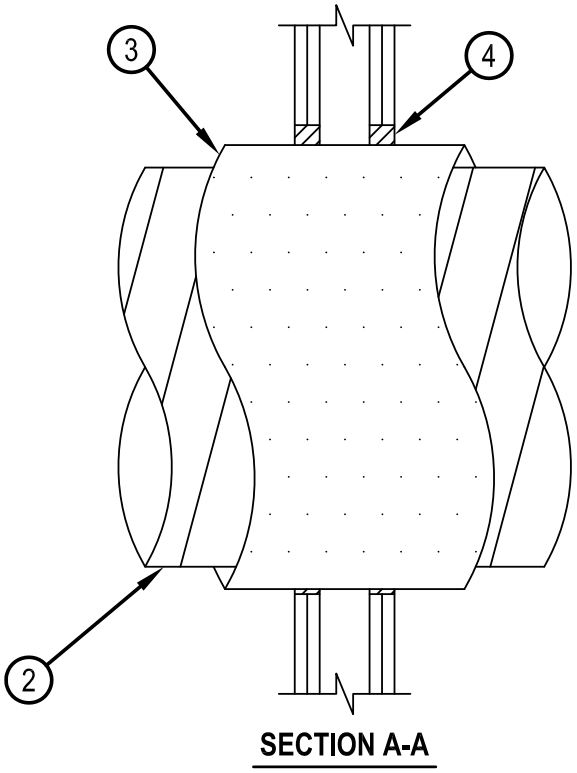

SECTION A-A

1. Wall Assembly — The 1 or 2 hr fire-rated gypsum wallboard/stud wall assembly shall be constructed of the materials and in the manner described in the individual U400, V400 or W400 Series Wall or Partition Design in the UL Fire Resistance Directory and shall include the following construction features:
   A. Studs — Wall framing shall consist of channel studs. Steel studs to be min 2-1/2 in. (64 mm) wide and spaced max 24 in. (610 mm) OC.
   B. Wallboard, Gypsum* — 5/8 in. (16 mm) thick, 4 ft (122 cm) wide with square or tapered edges. The gypsum board type, thickness, number of layers, fastener type and sheet orientation shall be as specified in the individual Wall and Partition Design in the UL Fire Resistance Directory. Max diam of opening is 23-1/2 in. (597 mm).
   The hourly F and FH Ratings of the firestop system are equal to the hourly fire rating of the wall assembly in which it is installed.

Reproduced by HILTI, Inc. Courtesy of Underwriters Laboratories, Inc.
January 27, 2015

System No. W-L-7153

2. Steel Duct — Galv steel duct to be installed concentrically or eccentrically within the firestop system. Duct to be rigidly supported on both sides of wall assembly.
   A. Spiral Wound HVAC Duct — Nom 20 in. (508 mm) diam (or smaller) No. 24 MSG (or heavier) galv steel spriral wound duct.
   B. Sheet Metal Duct — Nom 12 in. (305 mm) diam (or smaller) No. 28 MSG (or heavier) galv sheet steel duct.
3. Duct Insulation* — Nom 1-1/2 in. (38 mm) thick glass fiber batt or blanket (min 3/4 pcf or 56 kg/m3) jacketed on the outside with a foil-scrim-kraft facing. Longitudinal and transverse joints sealed with aluminum foil tape. During the installation of the fill material, the batt or blanket shall be compressed 50% such that the annular space within the firestop system shall be min 1/4 in. (6 mm) to max 1 in. (25 mm). See Batts and Blankets - (BKNV) category in the Building Materials Directory for names of manufacturers. Any batt or blanket meeting the above specifications and bearing the UL Classification Marking with a Flame Spread Index of 25 or less and a Smoke Developed Index 50 or less may be used.
4. Fill, Void or Cavity Material* — Sealant — Min 5/8 in. (16 mm) or 1-1/4 in. (32 mm) thickness of fill material applied within annulus, flush with both surfaces of wall for 1 or 2 hr walls, respectively. If voids develop after the fill materials cures, the voids shall be sealed with additional fill material.
   HILTI CONSTRUCTION CHEMICALS, DIV OF HILTI INC — FS-ONE Sealant or FS-ONE MAX Intumescent Sealant

* Indicates such products shall bear the UL or cUL Certification Mark for jurisdictions employing the UL or cUL Certification (such as Canada), respectively.

Reproduced by HILTI, Inc. Courtesy of
Underwriters Laboratories, Inc.
January 27, 2015

System No. W-L-7156

Classified by Underwriters Laboratories, Inc. to UL 1479 and CAN/ULC-S115

ANSI/UL1479 (ASTM E814)	CAN/ULC S115
F Ratings — 1 and 2 Hr (See Item 1)	F Ratings — 1 and 2 Hr (See Item 1)
T Rating — 0 Hr	FT Rating — 0 Hr
	FH Ratings — 1 and 2 Hr (See Item 1)
	FTH Rating — 0 Hr

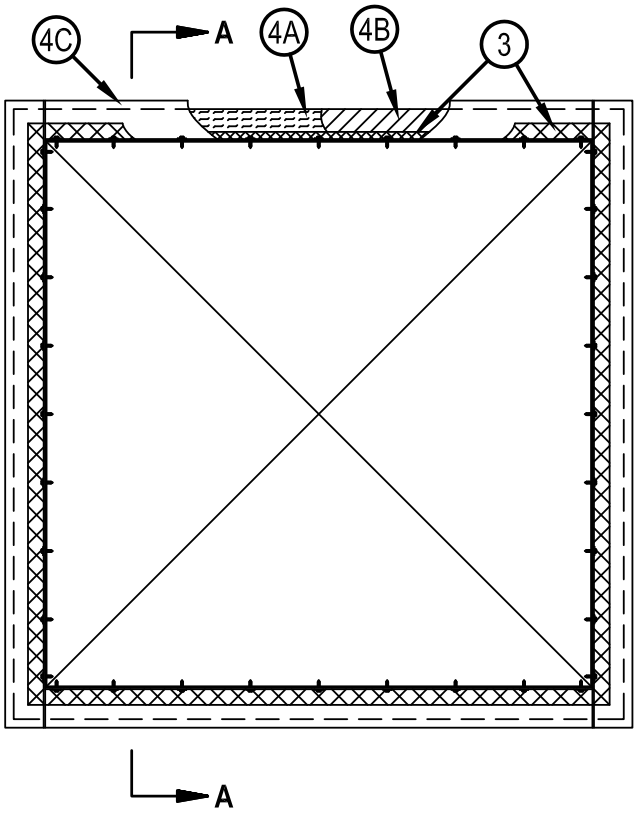

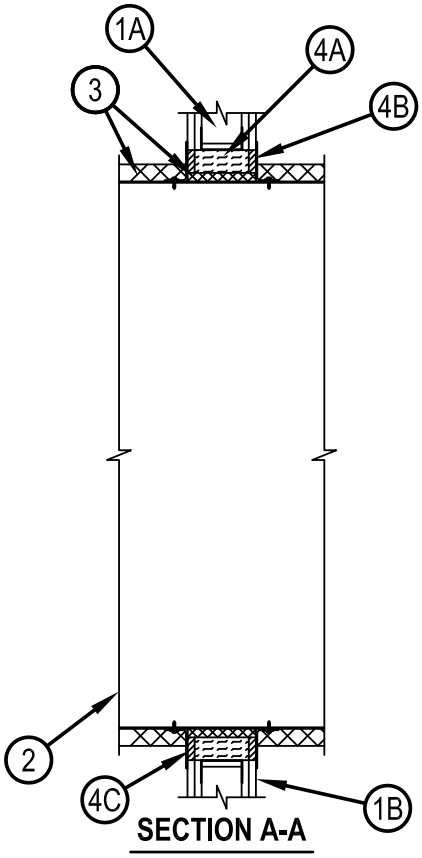

1. Wall Assembly — The 1 or 2 hr fire-rated gypsum board/stud wall assembly shall be constructed of the materials and in the manner specified in the individual U300, U400, V400 or W400 Series Wall and Partition Designs in the UL Fire Resistance Directory and shall include the following construction features:
   A. Studs — Wall framing shall consist of either wood studs or steel channel studs. Wood studs to consist of nom 2 by 4 in. (51 by 102 mm) lumber spaced max 16 in. (406 mm) OC. Steel studs to be min 3-1/2 in. (89 mm) wide and spaced max 24 in. (610 mm) OC. Additional framing members shall be used to completely frame around opening.
   B. Gypsum Board* — Min 5/8 in. (16 mm) thick, 4 ft (1.2 m) wide with square or tapered edges. The gypsum board type, thickness, number of layers and orientation shall be as specified in the individual Wall and Partition Design. Max size of opening is 210 sq in. (1355 cm2) with a max width of 14-1/2 in. (368 mm) for wood studs. Max size of opening is 76.2 sq ft. (7 m2) with a max width of 105-1/2 in. (2.7 m) for steel studs.

   The hourly F and FH Ratings of the firestop system are equal to the hourly fire rating of the wall in which it is installed.
2. Steel Duct — Max 100 by 100 in. (2.5 by 2.5 m) steel duct to be installed within the framed opening. The duct shall be constructed and reinforced in accordance with SMACNA construction standards. Steel duct to be rigidly supported on both sides of wall assembly.

Reproduced by HILTI, Inc. Courtesy of Underwriters Laboratories, Inc.
January 27, 2015

System No. W-L-7156

3. Batts and Blankets* — Nom 1-1/2 or 2 in. (38 or 51 mm) thick glass fiber batt or blanket (min 3/4 pcf or 12 kg/m3) jacketed on the outside with a foil-scrim-kraft facing. Longitudinal and transverse joints sealed with aluminum foil tape. During the installation of the fill material, the batt or blanket shall be compressed minimum 50% such that the annular space within the firestop system shall be min 1/2 in. (13 mm) to max 2 in. (51 mm).
   See Batts and Blankets (BKNV) category in the Building Materials Directory for names of manufacturers. Any batt or blanket meeting the above specifications and bearing the UL Classification Marking with a Flame Spread Index of 25 or less and a Smoke Developed Index 50 or less may be used.
4. Firestop System — The firestop system shall consist of the following:
   A. Packing Material — Min 3-5/8 (92 mm) or 4-7/8 in. (124 mm) thickness of min 4 pcf (64 kg/m3) mineral wool batt insulation firmly packed into opening as a permanent form for 1 or 2 hr fire-rated walls, respectively. Packing material to be recessed from both surfaces of wall to accommodate the required thickness of fill material.
   B. Fill, Void or Cavity Material* — Sealant — Min 5/8 in. (16 mm) thickness of fill material applied within annulus, flush with both surfaces of wall. HILTI CONSTRUCTION CHEMICALS, DIV OF HILTI INC — FS-ONE Sealant or FS-ONE MAX Intumescent Sealant
   C. Steel Retaining Angles — Min No. 16 gauge (0.059 in. or 1.5 mm) galv steel angles sized to lap steel duct a min of 2 in. 51 mm) and lap wall surfaces a min of 1 in. (25 mm). Angles attached to steel duct on both sides of wall with min No. 10 steel sheet metal screws spaced a max of 1 in. (25 mm) from each end of steel duct and spaced a max of 6 in. (152 mm) OC. When max duct dimension does not exceed 48 in. (122 cm) and duct area does not exceed 1300 in2 (8387 cm2), angles may be min No. 18 gauge galv steel. Angles attached to steel duct on both sides of wall with min No. 10 by 1/2 in. (13 mm) long steel sheet metal screws located a max of 1 in. (25 mm) from each end of steel duct and spaced a max of 6 in. (152 mm) OC. When max 1-1/2 in. (38 mm) thick insulation is used, steel angles are optional for those sides of duct that do not exceed the dimension specified in Table below, dependent on packing material and annular space as specified.

Max Duct Dimension	Duct Thickness	Annular Space	Packing Material	Angle (Item 3C) Required
24 in. (610 mm)	24 ga or heavier	1/2 in. min to 1 in. max (13 to 25 mm)	Item 3A1	No

* Indicates such products shall bear the UL or cUL Certification Mark for jurisdictions employing the UL or cUL Certification (such as Canada), respectively.

Reproduced by HILTI, Inc. Courtesy of
Underwriters Laboratories, Inc.
January 27, 2015

ENGINEERING JUDGMENT FIRESTOP DETAIL

PROJECT : VENETIAN (P5 & 6)

CONTRACTOR : ATAL

F-RATING = 2-HR.

TOP VIEW

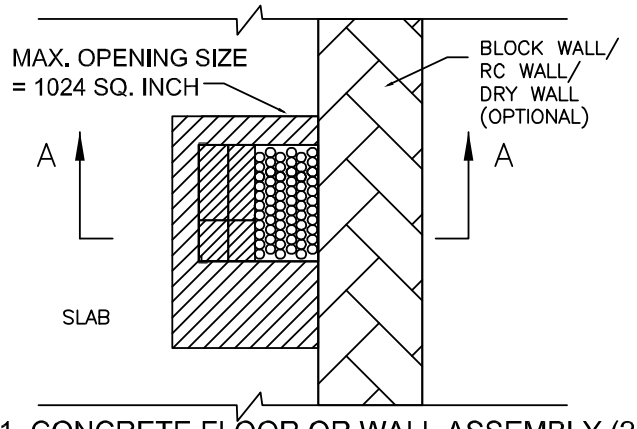

SECTION A-A

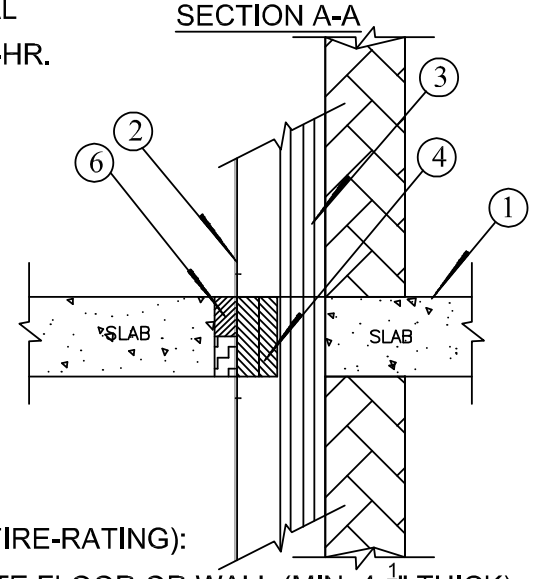

1. CONCRETE FLOOR OR WALL ASSEMBLY (2-HR. FIRE-RATING):

   A. LIGHTWEIGHT OR NORMAL WEIGHT CONCRETE FLOOR OR WALL (MIN. 4 $\frac{1}{2}$" THICK).
   B. ANY UL/CUL CLASSIFIED CONCRETE BLOCK WALL.
2. MAXIMUM 12" X 12" METAL TRUNKING.
3. AGGREGATE CROSS-SECTIONAL AREA OF CABLE INSIDE TRUNKING TO BE MAXIMUM 60% OF THE CROSS-SECTIONAL AREA OF THE TRUNKING.
4. FS657 FIRE BLOCKS INSTALLED WITH 7 $\frac{7}{8}$" DIMENSION PROJECTING THROUGH OPENING, FLUSH WITH THE TOP SURFACE OF FLOOR OR EITHER SURFACE OF WALL. BLOCKS TO COMPLETELY FILL THE REMAINING AREA OF THE TRUNKING.
5. (NOT SHOWN) FS-ONE SEALANT TO BE APPLIED WITHIN ALL OPENINGS BETWEEN CABLES AND FIRE BLOCKS.
6. a) MINIMUM $\frac{1}{2}$" DEPTH HILTI CP606 FLEXIBLE FIRESTOP SEALANT WITH MINIMUM 4" THICKNESS MINERAL WOOL (MINIMUM 4 PCF DENSITY) TIGHTLY PACKED AS BACKING. (FOR ANNULAR WIDTH < = 1 $\frac{1}{4}$").

   b) MINIMUM 2 $\frac{1}{2}$" DEPTH HILTI CP636 FIRESTOP MORTAR WITH MINIMUM 2" THICKNESS MINERAL WOOL (MINIMUM 4 PCF DENSITY) TIGHTLY PACKED AS BACKING. (FOR ANNULAR WIDTH > 1 $\frac{1}{4}$"). (MAX. AREA OF OPENING = 1024 SQ. INCH)

NOTES (FOR WALL ASSEMBLY) :

1. MINIMUM $\frac{1}{2}$" DEPTH HILTI CP606 FLEXIBLE FIRESTOP SEALANT IS REQUIRED ON BOTH SIDES OF A WALL ASSEMBLY. (REFER TO ITEM 6a)
2. CP636 FIRESTOP MORTAR FULLY FILLED ACROSS THE PENETRATION IS RECOMMENDED FOR A WALL ASSEMBLY. (REFER TO ITEM 6b)

THIS ENGINEERING JUDGMENT REPRESENTS A FIRESTOP SYSTEM THAT WOULD BE EXPECTED TO PASS THE STATED RATINGS IF TESTED.
ALL CONFIGURATIONS SHOWN ARE SUGGESTIONS ONLY AND MUST BE APPROVED.
BY THE SPECIFYING ARCHITECTS OR ENGINEERS FOR THE PROJECT.
THIS IS A MODIFCATION OF THE CLOSEST APPLICABLE SYSTEM.

(REFERENCE : UL SYSTEM NO. C-AJ-3232)

Hilti Firestop Systems	HILTI (HONG KONG) LTD.	Sheet 1 OF 1	Drawing No. HK06020
	Designed by Keith Kwok	Scale NIL	
		Date 27th MAR., 2006	

Saving Lives through Innovation and Education

ENGINEERING JUDGMENT FIRESTOP DETAIL

PROJECT : VENETIAN (P5 & 6)

CONTRACTOR : ATAL

F-RATING = 2-HR.

SIDE VIEW

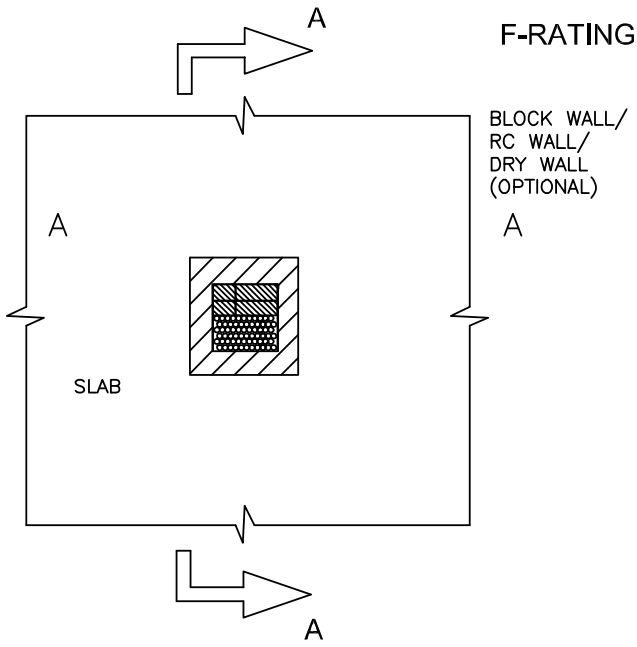

SECTION A-A

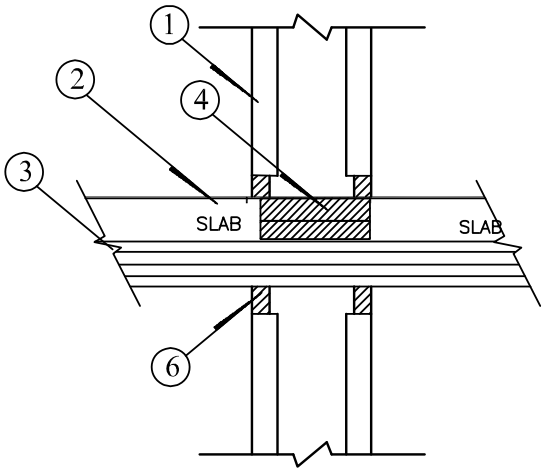

1. DRYWALL ASSEMBLY (2-HR. FIRE-RATING)
2. MAXIMUM 12" X 12" METAL TRUNKINGS.
3. AGGREGATE CROSS-SECTIONAL AREA OF CABLE INSIDE TRUNKING TO BE MAXIMUM 60% OF THE CROSS-SECTIONAL AREA OF THE TRUNKING.
4. FS657 FIRE BLOCKS INSTALLED WITH 7 $\frac{7}{8}$" DIMENSION PROJECTING THROUGH OPENING, FLUSH WITH THE TOP SURFACE OF FLOOR OR EITHER SURFACE OF WALL. BLOCKS TO COMPLETELY FILL THE REMAINING AREA OF THE TRUNKING.
5. (NOT SHOWN) FS-ONE SEALANT TO BE APPLIED WITHIN ALL OPENINGS BETWEEN CABLES AND FIRE BLOCKS.
6. MINIMUM 1 $\frac{1}{4}$" DEPTH HILTI CP606 FLEXIBLE FIRESTOP SEALANT.

NOTES :

1. ANNULAR SPACE (BETWEEN PERIPHERY OF OPENING AND TRUNKING) = MAXIMUM 1 $\frac{1}{4}$".
2. MINIMUM 1 $\frac{1}{4}$" DEPTH HILTI CP606 FLEXIBLE FIRESTOP SEALANT IS REQUIRED ON BOTH SIDES OF A WALL ASSEMBLY.
3. TRUNKINGS TO BE RIGIDLY SUPPORTED ON BOTH SIDES OF THE WALL ASSEMBLY.

THIS ENGINEERING JUDGMENT REPRESENTS A FIRESTOP SYSTEM THAT WOULD BE EXPECTED TO PASS THE STATED RATINGS IF TESTED.
ALL CONFIGURATIONS SHOWN ARE SUGGESTIONS ONLY AND MUST BE APPROVED.
BY THE SPECIFYING ARCHITECTS OR ENGINEERS FOR THE PROJECT.
THIS IS A MODIFCATION OF THE CLOSEST APPLICABLE SYSTEM.

(REFERENCE : UL SYSTEM NO. C-AJ-3232 & W-L-1297)

Hilti Firestop Systems	HILTI (HONG KONG) LTD.	Sheet 1 OF 1	Drawing No. HK06063
	Designed by Keith Kwok	Scale NIL	
		Date 5th AUG., 2006	

Saving Lives through Innovation and Education

Classified by
Underwriters Laboratories, Inc.
to UL 1479 and CAN/ULC-S115

System No. C-AJ-1140

F Rating -- 3 Hr
T Rating -- 0 Hr

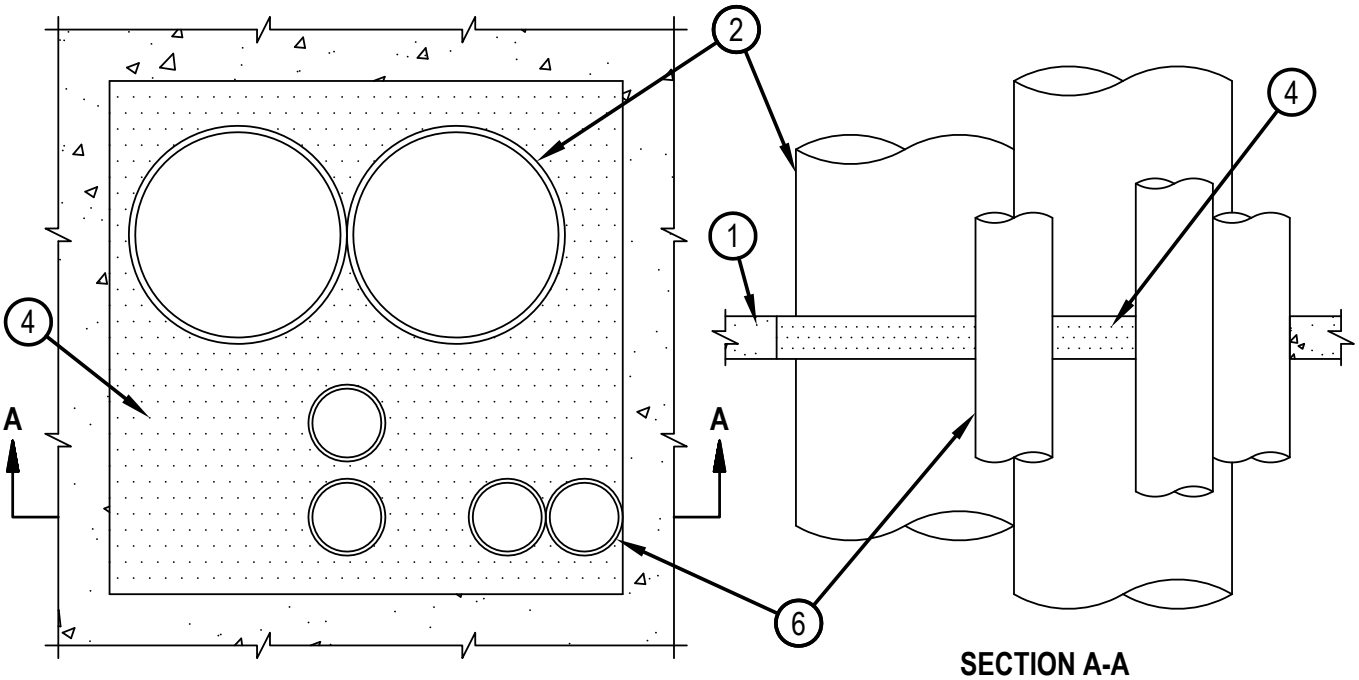

SECTION A-A

1. Floor or Wall Assembly — Min 2-1/2 in. (63 mm) thick reinforced lightweight or normal weight (100-150 pcf or1600-2400 kg/m3) concrete. Wall may also be constructed of any UL Classified Concrete Blocks *. Max area of opening is 1024 sq in. (.66 sq m) with max dimension of 32 in. (81.3 cm).
   See Concrete Blocks (CAZT) category in the Fire Resistance Directory for names of manufacturers.
2. Through Penetrants — One or more penetrants to be installed in opening. Min clearance between pipes, conduits or tubing is 0 in. (0 mm). (point contact). Min clearance between pipes, conduit or tubing and periphery of through opening is 1 in. (25 mm). Min clearance between pipes, conduit or tubing and periphery of any single surface of through opening is 0 in. (point contact). Pipe, conduit or tubing to be rigidly supported on both sides of floor or wall assembly. The following types and sizes of metallic pipes, conduits or tubing may be used:
   A. Steel Pipe — Nom 12 in. (305 mm) diam (or smaller) Schedule 10 (or heavier) steel pipe.
   B. Conduit — Nom 4 in. (102 mm) diam (or smaller) steel electrical metallic tubing or steel conduit.
   C. Copper Tubing — Nom 4 in. (102 mm) diam (or smaller) Type L (or heavier) copper tubing.
   D. Copper Pipe — Nom 4 in. (102 mm) diam (or smaller) Regular (or heavier) copper pipe.
3. Forms — (Not Shown) — Used as a form to prevent leakage of fill material during installation. Forms to be a rigid sheet material, cut to fit the contour of the penetrating item and positioned as required to accommodate the required thickness of fill material. Forms may be removed after fill material has cured.
4. Firestop System — The details of the firestop system shall be as follows:
   A. Packing Material — (Optional, Not Shown) - For floors greater than 2-1/2 in. (63 mm) thick, mineral wool batt insulation firmly packed into opening as a permanent or temporary form and recessed from the top surface of floor to accommodate the required thickness of the fill material.
   B. Fill, Void or Cavity Material* — Mortar — Min 2-1/2 in. (63 mm) thickness of fill material applied within the annulus. Fill material is mixed at a rate of 2.5 parts dry mix to one part water by weight in accordance with the installation instructions supplied with fill material.
   HILTI CONSTRUCTION CHEMICALS, DIV OF
   HILTI INC — Type CP636 or CP637

*Bearing the UL Classification Mark

Hilti Firestop Systems

Reproduced by HILTI, Inc. Courtesy of
Underwriters Laboratories, Inc.
March 19, 2012

Classified by
Underwriters Laboratories, Inc.
to UL 1479

System No. C-AJ-8096

F Rating -- 2 Hr
T Rating -- 0, 1/2 and 2 Hr (See Item 2)

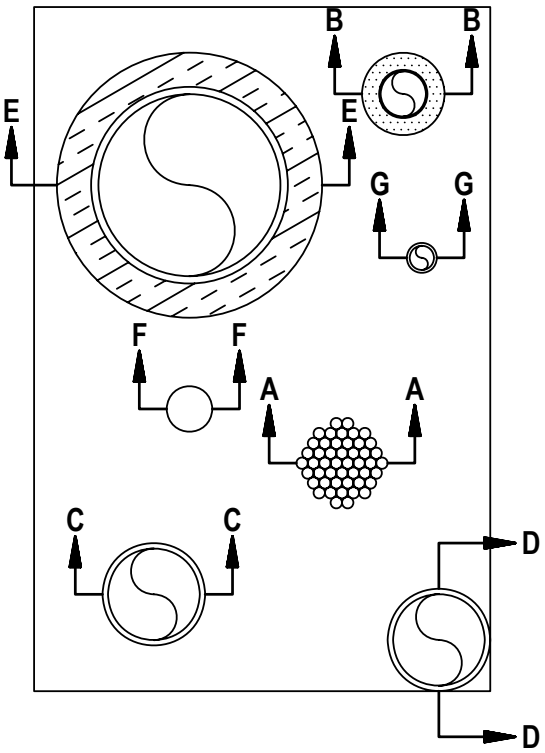

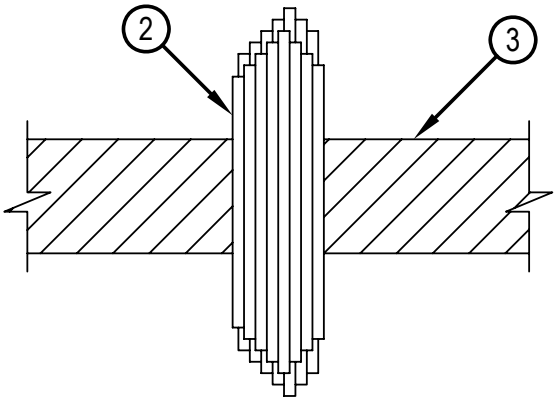

SECTION A-A

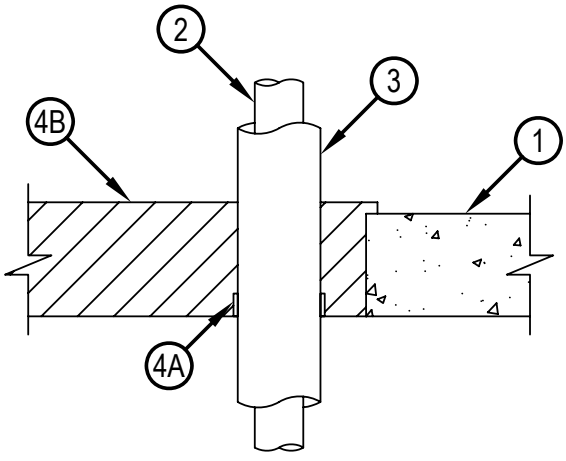

SECTION B-B

Hilti Firestop Systems

Reproduced by HILTI, Inc. Courtesy of
Underwriters Laboratories, Inc.
July 20, 2005

Classified by
Underwriters Laboratories, Inc.
to UL 1479

System No. C-AJ-8096

F Rating -- 2 Hr
T Rating -- 0, 1/2 and 2 Hr (See Item 2)

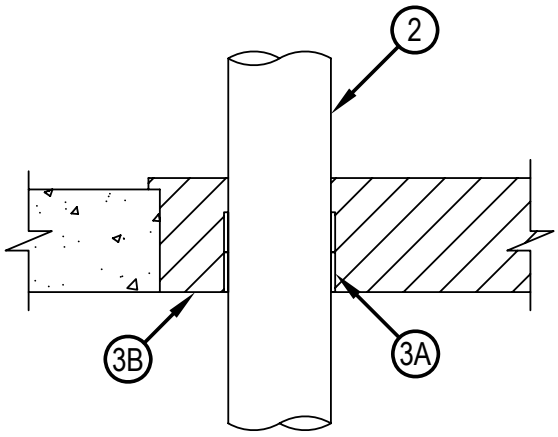

SECTION C-C

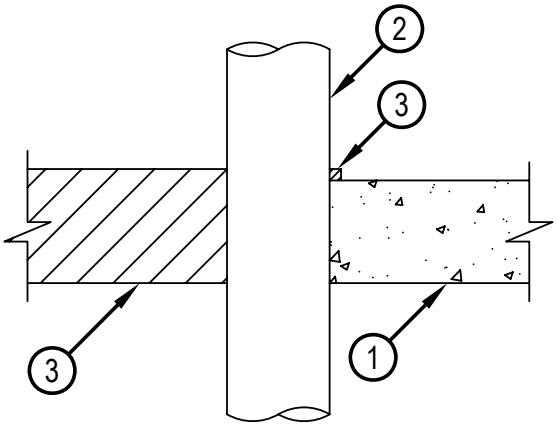

SECTION D-D

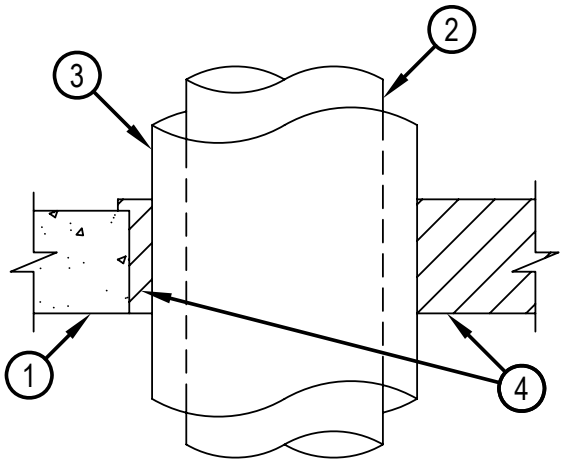

SECTION E-E

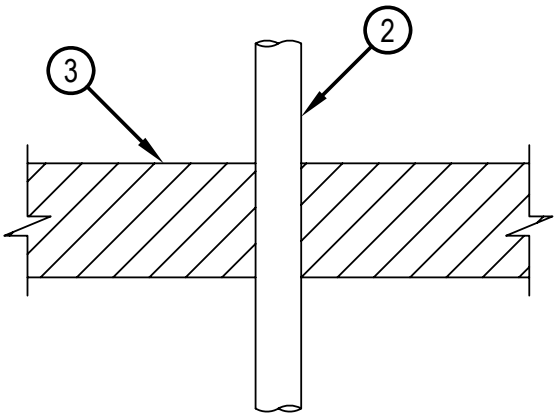

SECTION F-F

Reproduced by HILTI, Inc. Courtesy of
Underwriters Laboratories, Inc.
July 20, 2005

Classified by
Underwriters Laboratories, Inc.
to UL 1479

System No. C-AJ-8096

F Rating -- 2 Hr
T Rating -- 0, 1/2 and 2 Hr (See Item 2)

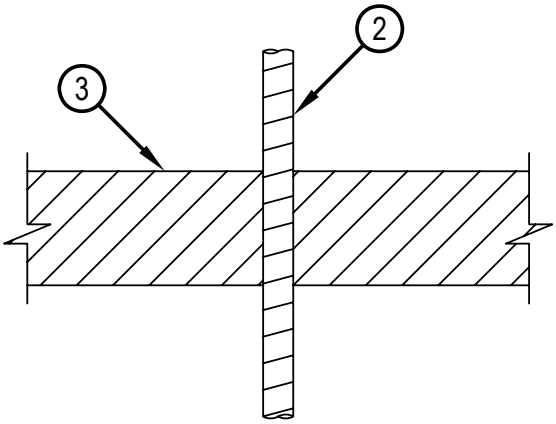

SECTION G-G

1. Floor or Wall Assembly -- Min 4-1/2 in. thick reinforced lightweight or normal weight (100-150 pcf) concrete. Wall may also be constructed of any UL Classified Concrete Blocks*. Max area of 600 sq in. with max dimension of 30 in
   See Concrete Blocks (CAZT) category in the Fire Resistance Directory for names of manufacturers.
2. Through Penetrants -- A max of seven firestop configurations may be installed within the opening. The space between firestop configurations shall be as specified in the individual configurations. Unless otherwise indicated, the space between firestop configurations and periphery of opening shall be min 1/2 in. to max 5-1/2 in. Pipe, conduit, tubing or cables to be rigidly supported on both sides of floor or wall assembly. The T Rating of the system is dependent on the firestop configurations, as shown in the table below. Any combination of the following firestop configurations detailed herein may be used:

Firestop Configuration	T Rating Hr
A	1/2
B	1/2
C	0
D	0
E	2
F	1/2
G	0

Reproduced by HILTI, Inc. Courtesy of
Underwriters Laboratories, Inc.
July 20, 2005

Classified by
Underwriters Laboratories, Inc.
to UL 1479

System No. C-AJ-8096

F Rating -- 2 Hr
T Rating -- 0, 1/2 and 2 Hr (See Item 2)

Firestop Configuration A

2. Cables -- Max 4 in. diam of tightly bundled cables. The min annular space between adjacent penetrants shall be 4 in. Cable bundle may be any combination of the following types and sizes of cables:
   A. Max 300 pair No. 24 AWG copper telephone cables with polyvinyl chloride (PVC) insulation and jacket materials.
   B. Max 500 kcmil single conductor copper power cable with PVC jacket material.
   C. Max 7/C No. 12 AWG cable with polyvinyl PVC insulation and jacket materials.
   D. Multiple fiber optical communication cables with PVC jacket material and having a max outside diameter of 3/8 in.
   E. Max 3/C No. 12 AWG steel clad cables with PVC insulation materials.
   F. Max 3/C No. 10 AWG cables with ground with PVC insulation and jacket materials.
3. Fill, Void or Cavity Material*-Foam -- Min 5 in. thickness of fill material applied within the annulus, extending ½ in. above the top surface of the floor or both surfaces of wall and overlapping the concrete ½ in. on all sides of the opening.
   HILTI CONSTRUCTION CHEMCIALS, DIV OF HILTI INC -- CP 620 Fire Foam

Firestop Configuration B

2. Copper Tube or Pipe -- Nom 2 in. diam (or smaller) Type L copper tube or nom 2 in diam (or smaller) Regular (or heavier) copper pipe. Min space between adjacent penetrants shall be 3 in.
3. Tube Insulation-Plastics+ -- Nom ¾ in. thick acrylonitrile butadiene/polyvinyl chloride (AB/PVC) flexible foam furnished in the form of tubing. The min space between adjacent penetrants shall be 3 in. See Plastics+ (QMFZ2) category in the Plastics Recognized Component Directory for names of manufacturers. Any Recognized Component tube insulation material meeting the above specifications and having a UL 94 Flammability Classification of 94-5VA may be used.
4. Firestop System -- The firestop system shall consist of the following:
   A. Fill, Void or Cavity Material*-Wrap Strip -- Min 1 in. wide wrap strip applied in a single wrap installed flush with bottom surface of floor or extending ½ in. beyond both surfaces of wall.
      HILTI CONSTRUCTION CHEMCIALS, DIV OF HILTI INC -- CP 648E Wrap Strip
   B. Fill Void or Cavity Materials* - Foam -- Min 5 in. thickness of fill material applied within the annulus, extending ½ in. above the top surface of the floor or both surfaces of wall and overlapping the concrete ½ in. on all sides of the opening.
      HILTI CONSTRUCTION CHEMCIALS, DIV OF HILTI INC -- CP 620 Fire Foam

Firestop Configuration C

2. Polyvinyl Chloride (PVC) Pipe -- Nom 4 in. diam (or smaller) Schedule 40 solid or cellular core PVC pipe for used in closed (process or supply) or vented (drain, waste or vent) piping systems. The min space between adjacent penetrants shall be 4-1/2 in.
3. Firestop System -- The firestop system shall consist of the following:
   A. Fill, Void or Cavity Material*-Wrap Strip -- Two stacks of min 1-3/4 in. wide wrap strips, each applied in a single wrap and tightly butted, installed flush with bottom surface of floor or both surfaces of wall or extending 1/2 in. beyond both surfaces of wall.
      HILTI CONSTRUCTION CHEMCIALS, DIV OF HILTI INC -- CP 648E Wrap Strip
   B. Fill Void or Cavity Materials* - Foam -- Min 5 in. thickness of fill material applied within the annulus flush with bottom surface and extending ½ in. above the top surface of the floor or extending ½ in. beyond both surfaces of wall and overlapping the concrete ½ in. on all sides of the opening.
      HILTI CONSTRUCTION CHEMCIALS, DIV OF HILTI INC -- CP 620 Fire Foam

Reproduced by HILTI, Inc. Courtesy of
Underwriters Laboratories, Inc.
July 20, 2005

Classified by
Underwriters Laboratories, Inc.
to UL 1479

System No. C-AJ-8096

F Rating -- 2 Hr
T Rating -- 0, 1/2 and 2 Hr (See Item 2)

Firestop Configuration D

2. Through Penetrant -- One metallic pipe, conduit or tube to be installed either concentrically or eccentrically within the firestop system. The min annular space between the pipe, conduit of tube and periphery of opening shall be 0 in. (point contact). The min space between adjacent penetrants shall be 4 in. Pipe, conduit of tube to be rigidly supported on both sides of floor or wall assembly. The following types and sizes of metallic pipes, conduits or tubes may be used:
   A. Nom 4 in. diam (or smaller) Schedule 10 (or heavier) steel pipe.
   B. Nom 4 in. diam (or smaller) cast or ductile iron pipe.
   C. Nom 4 in. diam (or smaller) rigid steel conduit.
   D. Nom 4 in. diam (or smaller) steel electrical metallic conduit.
   E. Nom 4 in. diam (or smaller) Type L (or heavier) copper tubing.
   F. Nom 4 in. diam (or smaller) Regular (or heavier) copper pipe.
3. Fill, Void or Cavity Material*-Foam -- Min 5 in. thickness of fill material applied within the annulus, extending ½ in. above the top surface of the floor or both surfaces of wall and overlapping the concrete ½ in. on all sides of the opening.
   HILTI CONSTRUCTION CHEMCIALS, DIV OF HILTI INC -- CP 620 Fire Foam

Firestop Configuration E

2. Steel Pipe -- Nom 8 in. diam (or smaller) Schedule 40 (or heavier) steel pipe.
3. Pipe Covering Materials* -- Nom 1-1/2 in. thick hollow cylindrical heavy density (min 3.5 pcf) glass fiber units jacketed on the outside with an all-service jacket. Longitudinal joints sealed with metal fasteners or factory-applied, self-sealing lap tape. Transverse joints secured with metal fasteners of with butt tape supplied with product. The min space between adjacent penetrants shall be 3 in.
   See Pipe and Equipment Covering - Materials (BRGU) Category in the Building Materials Directory for names of manufacturers. Any pipe covering meeting the above specifications and bearing the UL Classification Marking with a Flame Spread Index of 25 or less and a Smoke Developed Index of 50 or less may be used.
4. Fill, Void or Cavity Material*-Foam -- Min 5 in. thickness of fill material applied within the annulus, extending ½ in. above the top surface of the floor or both surfaces of wall and overlapping the concrete ½ in. on all sides of the opening.
   HILTI CONSTRUCTION CHEMCIALS, DIV OF HILTI INC -- CP 620 Fire Foam

Firestop Configuration F

2. Cable -- Nom 2 in. diam (or smaller) TEK cable with cross-linked polyethylene insulation. The min space between adjacent penetrants shall be 3 in.
3. Fill, Void or Cavity Material*-Foam -- Min 5 in. thickness of fill material applied within the annulus, extending ½ in. above the top surface of the floor or both surfaces of wall and overlapping the concrete ½ in. on all sides of the opening.
   HILTI CONSTRUCTION CHEMCIALS, DIV OF HILTI INC -- CP 620 Fire Foam

Firestop Configuration G

2. Flexible Conduit -- Nom 1 in. diam (or smaller) flexible aluminum conduit. The min space between adjacent penetrants shall be 5 in.
3. Fill, Void or Cavity Material*-Foam -- Min 5 in. thickness of fill material applied within the annulus, extending ½ in. above the top surface of the floor or both surfaces of wall and overlapping the concrete ½ in. on all sides of the opening.
   HILTI CONSTRUCTION CHEMCIALS, DIV OF HILTI INC -- CP 620 Fire Foam

*Bearing the UL Classification Mark

Reproduced by HILTI, Inc. Courtesy of
Underwriters Laboratories, Inc.
July 20, 2005

Classified by
Underwriters Laboratories, Inc.
to UL 1479 and CAN/ULC-S115

System No. C-AJ-8099

ANSI/UL1479 (ASTM E814)	CAN/ULC S115
F Rating — 3 Hr	F Rating — 3 Hr
T Ratings — 0 and 3/4 Hr (See Item 2)	FT Ratings — 0 and 3/4 Hr (See Item 2)
	FH Rating — 2 Hr
	FTH Ratings — 0 and 3/4 Hr (See Item 2)

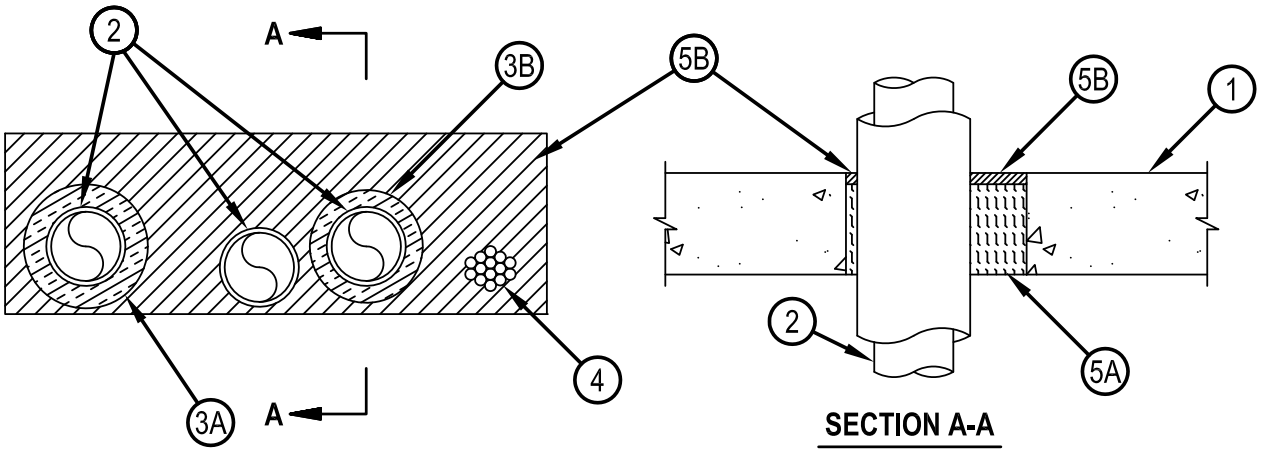

SECTION A-A

1. Floor or Wall Assembly — Min 4-1/2 in. (114 mm) thick reinforced lightweight or normal weight (100-150 pcf or 1600-2400 kg/m3) concrete floor or min 5 in. (127 mm) reinforced lightweight or normal weight concrete wall. Wall may also be constructed of any UL Classified Concrete Blocks*. Floor may also be constructed of any min 6 in. (152 mm) thick UL Classified hollow core Precast Concrete Units*. Max area of square, rectangular or circular opening is 192 sq in. (1239 cm2) with max dimension of 24 in. (61 cm). When Precast Concrete Unit floors are used, max area of square, rectangular or circular opening is 49 sq in. (316 cm2) with max dimension of 7 in. (17.8 cm).

See Concrete Blocks (CAZT) and Precast Concrete Units (CFTV) categories in the Fire Resistance Directory for names of manufacturers.

2. Through-Penetrant — One or more pipes or tubes to be installed within the opening. The total number of through-penetrants is dependent on the size of the opening and types and sizes of the penetrants. Any combination of the penetrants described below may be used provided that the following parameters relative to the annular spaces and the spacings between the pipes are maintained. The separation between cable bundle, tubes and insulated tubes shall be a min 1/2 in. (13 mm) to max 3-1/8 in. (79 mm). The annular space between penetrants and the periphery of opening shall be a min 1/2 in. (13 mm) to max 5 in. 127 mm). Pipes or tubes to be rigidly supported on both sides of floor or wall assembly. The following types and sizes of metallic pipes or tubes may be used.

   A. Copper Tubing — Nom 3 in. (76 mm) diam (or smaller) Type L (or heavier) copper tube.
   B. Copper Pipe — Nom 3 in. (76 mm) diam (or smaller) Regular (or heavier) copper pipe.
   C. Steel Pipe — Nom 3 in. (76 mm) diam (or smaller) Schedule 10 (or heavier) steel pipe.
   D. Iron Pipe — Nom 3 in. (76 mm) diam (or smaller) cast or ductile iron pipe.
   E. Conduit — Nom 3 in. (76 mm) diam (or smaller) electric metallic tubing (EMT) or steel conduit.
   F. Flexible Steel Conduit+ — Nom 1 in. (25 mm) diameter (or smaller) flexible steel conduit.
   See Flexible Metal Conduit (DXUZ) category in the Electrical Construction Material Directory for names of manufacturers.
   G. Through Penetrating Product* — Flexible Metal Piping — The following types of steel flexible metal gas piping may be used:

Reproduced by HILTI, Inc. Courtesy of
Underwriters Laboratories, Inc.
January 15, 2015

System No. C-AJ-8099

1.) Nom 2 in. (51 mm) diam (or smaller) steel flexible metal gas piping. Plastic covering on piping may or may not be removed on both sides of floor or wall assembly.
OMEGA FLEX INC
2.) Nom 1 in. (25 mm) diam (or smaller) steel flexible metal gas piping. Plastic covering on piping may or may not be removed on both sides of floor or wall assembly.
GASTITE, DIV OF TITEFLEX
3.) Nom 2 in. (51 mm) diam (or smaller) steel flexible metal gas piping. Plastic covering on piping may or may not be removed on both sides of floor or wall assembly.
WARD MFG L L C

The hourly T Rating is 3/4 hr when a pipe or tube with fiber-glass insulation is used, or 0 hr when a pipe or tube, a pipe or tube with AB/PVC insulation or a cable bundle is used. T he T Rating is 0 hr when metallic penetrants without pipe insulation are used.

3. Pipe Insulation — (Optional)—The following types of pipe insulation may be used with metallic penetrants (Items 2A, 2B, 2C, 2D and 2F):
   A. Pipe Covering* — Nom 1 in. (25 mm) thick (or thinner) hollow cylindrical heavy density (min 3.5 pcf or 56 kg/m3) glass fiber units jacketed on the outside with an all service jacket. Longitudinal joints sealed with metal fasteners or factory-applied self-sealing lap tape. Transverse joints secured with metal fasteners or with butt tape supplied with the product.
   See Pipe and Equipment Covering - Materials (BRGU) category in the Building Materials Directory for names of manufacturers. Any pipe covering material meeting the above specifications and bearing the UL Classifica tion Marking with a Flame Spread Index of 25 or less and a Smoke Developed Index of 50 or less may be used.
   B. Tube Insulation-Plastics+++ — Nom 3/4 in. (19 mm) thick (or thinner) acrylonitrile butadiene/polyvinyl chloride (AB/PVC) flexible foam furnished in the form of tubing.
   See Plastics+++ (QMFZ2) category in the Plastics Recognized Component Directory for names of manufacturers. Any Recognized Component tube insulation material meeting the above specifications and having a UL 94 Flammability Classification of 94-5VA may be used.
4. Cables — Max 2 in. (51 mm) diam tight bundle of cables installed within the opening and rigidly supported on both sides of floor or wall assembly. The space between the cables and periphery of the opening shall range from min 2 in. (51 mm) to max 4 in. (102 mm). Any combination of the following types and sizes of metallic conductor of fiber optic cable may be used:
   A. Max 500 kcmil single copper connector power cable with thermoplastic insulation and polyvinyl chloride (PVC) jacket.
   B. Max 300 pair No. 24 AWG copper conductor telecommunication cables with PVC insulation and jacket material.
   C. Max 7/C copper conductor No. 12 AWG multiconductor power and control cables with PVC or cross-linked polyethylene (XLPE) insulation and PVC jacket.
   D. Multiple fiber optical communication cables jacketed with PVC and having a max outside diam of 1/2 in.
   E. Max 3/C copper conductor No. 12 AWG with bare aluminum ground, PVC insulated steel Metal-Clad cable.
5. Firestop System — The firestop system shall consist of the following:
   A. Packing Material — Min 4 in. (102 mm) thickness of min 4 pcf (64 kg/m3) mineral wool batt insulation firmly packed into opening as a permanent form. Packing material to be recessed from top surface of floor or both surfaces of wall to accommodate the required thickness of fill material. When Precast Concrete Unit floors are used, packing material shall be installed at a thickness equal to the thickness of the floor minus 1/2 in. (13 mm), flush with bottom surface of floor.
   B. Fill Void or Cavity Materials* - Sealant — Min 1/2 in. (51 mm) thickness of fill material applied within the annulus, flush with top surface of floor or with both surfaces of wall.
   HILTI CONSTRUCTION CHEMICALS, DIV OF HILTI INC — FS-ONE Sealant or FS-ONE MAX Intumescent Sealant.

+++Bearing the UL Recognized Component Marking

* Indicates such products shall bear the UL or cUL Certification Mark for jurisdictions employing the UL or cUL Certification (such as Canada), respectively.

+Bearing the UL Listing Mark

Reproduced by HILTI, Inc. Courtesy of
Underwriters Laboratories, Inc.
January 15, 2015

Classified by
Underwriters Laboratories, Inc.
to UL 1479 and CAN/ULC-S115

System No. C-AJ-8100

ANSI/UL1479 (ASTM E814)	CAN/ULC S115
F Rating — 3 Hr	F Rating — 3 Hr
T Ratings — 0, 3/4 and 1 Hr (See Item 2)	FT Ratings — 0, 3/4 and 1 Hr (See Item 2)
	FH Rating — 3 Hr
	FTH Ratings — 0, 3/4 and 1 Hr (See Item 2)

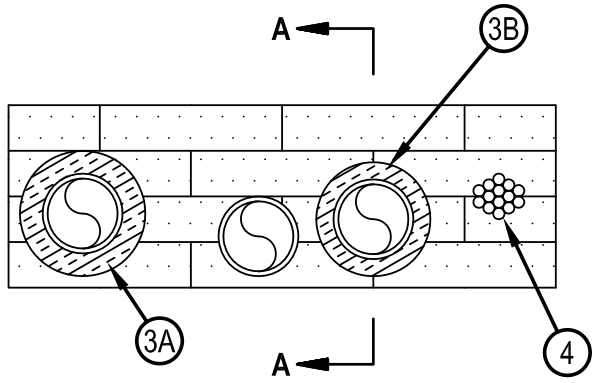

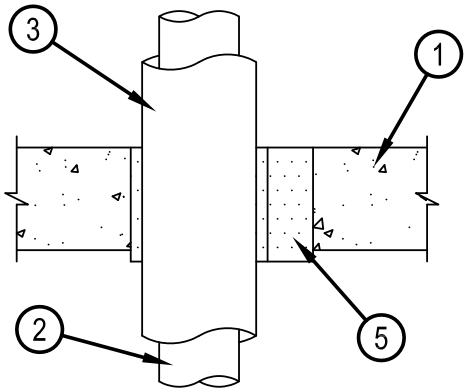

SECTION A-A

1. Floor or Wall Assembly — Min 4-1/2 in. (114 mm) thick reinforced lightweight or normal weight (100-150 pcf or 1600-2400 kg/m3) concrete floor or min 5 in. (127 mm) reinforced lightweight or normal weight concrete wall. Wall may also be constructed of any UL Classified Concrete Blocks*. Max area of opening is 192 in2 (1239 mm2) with max dimension of 24 in. (610 mm).
   See Concrete Blocks (CAZT) category in the Fire Resistance Directory for names of manufacturers.
2. Through-Penetrant — One or more pipes or tubes to be installed within the opening. The total number of through-penetrants is dependent on the size of the opening and types and sizes of the penetrants. Any combination of the penetrants described below may be used provided that the following parameters relative to the annular spaces and the spacings between the pipes are maintained. The separation between cable bundle, tubes and insulated tubes shall be min 1/2 in. (13 mm) to max 3-1/8 in. (79 mm). The annular space between penetrants and the periphery of opening shall be min 1/2 in. (13 mm) to max 5 in. (127 mm). Pipes or tubes to be rigidly supported on both sides of floor or wall assembly. The following types and sizes of metallic pipes or tubes may be used.
   A. Copper Tubing — Nom 3 in. (76 mm) diam (or smaller) Type L (or heavier) copper tube.
   B. Copper Pipe — Nom 3 in. (76 mm) diam (or smaller) Regular (or heavier) copper pipe.
   The hourly T, FT and FTH Ratings are 1 hr when a copper tube with fiber-glass insulation is used, 0 hr when a bare copper tube and a cable bundle are used and 3/4 hr when a copper tube with AB/PVC tube insulation is used.
3. Pipe Insulation — (Optional)—The floowing types of pipe insulation may be used:
   A. Pipe Covering* — Nom 1 in. (25 mm) thick (or thinner) hollow cylindrical heavy density (min 3.5 pcf) glass fiber units jacketed on the outside with an all service jacket. Longitudinal joints sealed with metal fasteners or factory-applied self-sealing lap tape. Transverse joints secured with metal fasteners or with butt tape supplied with the product.
   See Pipe and Equipment Covering —Materials (BRGU) category in the Building Materials Directory for names of manufacturers. Any pipe covering material meeting the above specifications and bearing the UL Classifica tion Marking with a Flame Spread Index of 25 or less and a Smoke Developed Index of 50 or less may be used.
   B. Tube Insulation-Plastics+++ — Nom 3/4 in. (19 mm) thick (or thinner) acrylonitrile butadiene/polyvinyl chloride (AB/PVC) flexible foam furnished in the foarm of tubing.
   See Plastics+++—(QMFZ2) category in the Plastics Recognized Component Directory for names of manufacturers. Any Recognized Component tube insulation material meeting the above specifications and having a UL 94 Flammability Classification of 94-5VA may be used.

Reproduced by HILTI, Inc. Courtesy of
Underwriters Laboratories, Inc.
January 28, 2015

System No. C-AJ-8100

4. Cables — Max 2 in. (51 mm) diam tight bundle of cables installed within the opening and rigidly supported on both sides of floor or wall assembly. The space between the cables and periphery of the opening shall range from min 2 in. to max 4 in. (51 to 102 mm). Any combination of the following types and sizes of metallic conductor of fiber optic cable may be used:
   A. Max 500 kcmil single copper connector power cable with thermoplastic insulation and polyvinyl chloride (PVC) jacket.
   B. Max 300 pair No. 24 AWG copper conductor telecommunication cables with PVC insulation and jacket material.
   C. Max 7/C copper conductor No. 12 AWG multiconductor power and control cables with PVC or cross-linked polyethylene (XLPE) insulation and PVC jacket.
   D. Multiple fiber optical communication cables jacketed with PVC and having a max outside diam of 1/2 in. (13 mm).
   E. Max 3/C copper conductor No. 12 AWG with bare aluminum ground, PVC insulated steel Metal-Clad cable.
5. Firestop System — The firestop system shall consist of the following:
   A. Fill Void or Cavity Materials*-Fire Blocks — Fire blocks installed with 5 in. (127 mm) dimension projecting through opening, flush with top surface of floor assembly or centered within wall assembly. In concrete block walls, fire block to fill entire thickness of wall opening unless wall is solid filled. Blocks to be firmly packed and completely fill the entire area of opening. Either one or a combination of the block types specified below may be used.
   HILTI CONSTRUCTION CHEMICALS, DIV OF HILTI INC — FS657 Fire Block or CFS-BL Firestop Block
   B. Fill Void or Cavity Materials* — Fill material applied to any voids that may exist around penetrants and fire blocks.
   HILTI CONSTRUCTION CHEMICALS, DIV OF HILTI INC — FS-ONE Sealant, FS-ONE MAX Intumescent Sealant or CP618 Firestop Putty Stick

+++Bearing the UL Recognized Component Marking

* Indicates such products shall bear the UL or cUL Certification Mark for jurisdictions employing the UL or cUL Certification (such as Canada), respectively.

Reproduced by HILTI, Inc. Courtesy of
Underwriters Laboratories, Inc.
January 28, 2015

System No. C-AJ-8110

Classified by
Underwriters Laboratories, Inc.
to UL 1479 and CAN/ULC-S115

ANSI/UL1479 (ASTM E814)	CAN/ULC S115
F Rating — 3 Hr	F Rating — 3 Hr
T Rating — 0 Hr	FT Rating — 0 Hr
	FH Rating — 3 Hr
	FTH Rating — 0 Hr

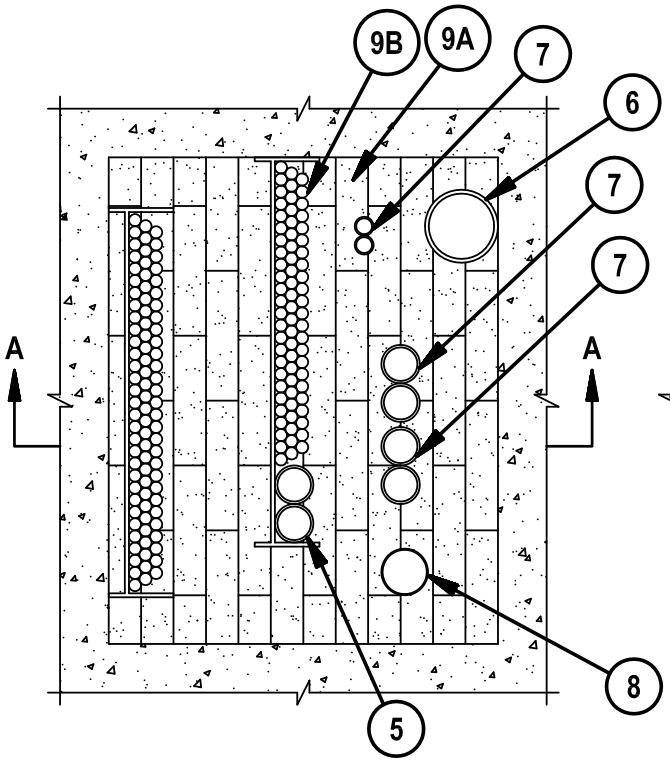

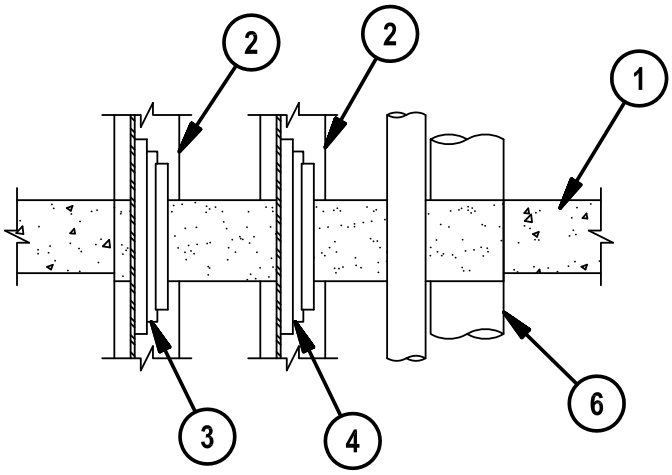

SECTION A-A

System tested with a pressure differential of 2.5 Pa between the exposed and the unexposed surfaces with the higher pressure on the exposed side.

1. Floor or Wall Assembly — Min 4-1/2 in. (114 mm) thick reinforced lightweight or normal weight (100-150 pcf or 1600-2400 kg/m3) concrete floor or concrete wall. Wall may also be constructed of any UL solid or filled Classified Concrete Blocks*. Max area of 720 sq in. (0.46 m2) with max dimension of 30 in. (762 mm).
   See Concrete Blocks (CAZT) category in the Fire Resistance Directory for names of manufacturers.
2. Cable Tray* — Max of two max 24 in (610 mm) wide by 4 in. (102 mm) deep open-ladder cable tray with channel-shaped side rails formed of 0.10 in. (2.5 mm) thick aluminum or 0.060 in. (.5 mm) thick steel and with 1 in. (25 mm) wide by 1 in. (25 mm) deep tubular channel-shaped rungs spaced 9 in. (229 mm) OC. The annular space between the periphery of the opening shall be min 0 in. (point contact) to max 3 in. (76 mm). Annular space between cable trays shall be 5 in. (127 mm) max. Cable tray to be rigidly supported on both sides of floor assembly.
3. Cables — Aggregate cross-sectional area of cables in cable tray to be max 45 percent of the cross-sectional area of the cable tray. Any combination of the following types and sizes of copper conductor cables may be used:
   A. 1/C, 750 kcmil (or smaller) power cable with polyvinyl chloride (PVC) insulation and jacket.
   B. 300 pair - No. 24 AWG telephone cable with PVC insulation and jacket.
   C. 24 fiber optic cable with PVC outer and subunit jacket.
   D. 3/C No. 12 AWG copper conductor steel clad cable with PVC insulation.
4. Cables — Aggregate cross-sectional area of cables in cable tray to be max 30 percent of the cross-sectional area of the cable tray. Any combination of the following types and sizes of copper conductor cables may be used:
   A. 1/C, 750 kcmil (or smaller) power cable with polyvinyl chloride (PVC) insulation and jacket.
   B. 100 pair - No. 24 AWG telephone cable with PVC insulation and jacket.
   C. 7/C No. 12 AWG cable with PVC insulation and jacket.
   D. 3/C (with ground) No. 12 AWG copper conductor non-metallic sheathed cable with PVC insulation and jacket.

Reproduced by HILTI, Inc. Courtesy of
Underwriters Laboratories, Inc.
January 15, 2015

System No. C-AJ-8110

5. Optical Fiber/Communication Cable Raceways+ — Nom 2 in. (51 mm) diam (or smaller) optical fiber raceway, formed from PVC. Raceway to be installed in accordance with the National Electrical Code (NFPA No. 70). Max two raceways placed into cable tray.

See Optical Fiber/Communication Cable Raceways (QAZM) category in the Electrical Construction Materials Directory for names of manufacturers.

6. Metallic Penetrants - One metallic pipe or tubing to be installed within the firestop system. — The min annular space between the copper tube or pipe and the periphery of the opening shall be 0 in. (point contact). The min space between adjacent penetrants shall be 2 in. (51 mm). Tube or pipe to be rigidly supported on both sides of floor assembly. The following types and sizes of metallic pipe or tubing may be used:
   A. Steel Pipe — Nom 8 in. (203 mm) diam (or smaller) Schedule 10 (or heavier) steel pipe.
   B. Iron Pipe — Nom 8 in. (203 mm) diam (or smaller) cast or ductile iron pipe.
   C. Conduit — Nom 6 in. (152 mm) diam (or smaller) rigid steel conduit.
   D. Conduit — Nom 4 in. (102 mm) diam (or smaller) steel electrical metallic conduit.
   E. Copper Tubing — Nom 4 in. (102 mm) diam (or smaller) Type L (or heavier) copper tubing.
   F. Copper Pipe — Nom 4 in. (102 mm) diam (or smaller) Regular (or heavier) copper pipe.
7. Conduit — Max 2 in. (51 mm) diam (or smaller) steel electrical metallic tubing (EMT) or steel conduit. The annular space between the EMT and the periphery of the opening shall be min 2 in. (51 mm). The min space between adjacent penetrants shall be 1-1/2 in. (38 mm) except that a max of two EMT or conduit may be installed at point contact with one another. EMT or conduit to be rigidly supported on both sides of floor assembly.
8. Cable — 1800 pair - No. 24 AWG 01 ARMM telephone cable with PVC insulation and jacket. The annular space between the cable and the periphery of the opening shall be min 3-1/2 in. (89 mm). The min space between adjacent penetrants shall be 1-1/2 in. (38 mm). Cable to be rigidly supported on both sides of floor assembly.
9. Firestop System — The firestop system shall consist of the following:
   A. Fill, Void or Cavity Material* - Fire Blocks — Blocks installed with 5 in. (127 mm) dimension projecting through opening flush with top surface of floor or centered in wall. Blocks to be firmly packed to fill entire opening. Either one or a combination of the block types specified below may be used.
   HILTI CONSTRUCTION CHEMICALS, DIV OF HILTI INC — FS 657 Fire Block or CFS-BL Firestop Block
   B. Fill, Void or Cavity Material* — Fill material to be forced into interstices of cables, between cables and cable tray and in obvious openings between blocks and between blocks and the periphery of the opening to the max extent possible on both surfaces of wall.
   HILTI CONSTRUCTION CHEMICALS, DIV OF HILTI INC — FS-ONE Sealant, FS-ONE MAX Intumescent Sealant, CP618 Firestop Putty Stick or CP 620 Fire Foam.
   C. Wire Mesh — (Not Shown) When the annular space exceeds 4 in. to the periphery, a nom 2 by 2 in. (51 by 51 mm) wire fencing shall be used to keep the blocks in place. The wire fencing shall be fabricated from min No. 16 SWG (0.060 in. or 1.5 mm) galv steel wire. The wire is cut to fit the contour of the penetrating item with a min 3 in. (76 mm) overlap beyond the periphery of the opening. Wire fencing secured to top surface of floor and both surfaces of the wall assembly by means of 1/4 in. (6 mm) diam by 1 in. (25 mm) long steel concrete anchors and 1/4 in. (6 mm) by 1-1/2 in. (38 mm) diam fender washers spaced max 8 in. (203 mm) OC.

* Indicates such products shall bear the UL or cUL Certification Mark for jurisdictions employing the UL or cUL Certification (such as Canada), respectively.

Reproduced by HILTI, Inc. Courtesy of
Underwriters Laboratories, Inc.
January 15, 2015

System No. C-AJ-8143

Classified by Underwriters Laboratories, Inc. to UL 1479 and CAN/ULC-S115

ANSI/UL1479 (ASTM E814)	CAN/ULC S115
F Rating — 2 Hr	F Rating — 2 Hr
T Rating — 0 Hr	FT Rating — 0 Hr
	FH Rating — 2 Hr
	FTH Rating — 0 Hr

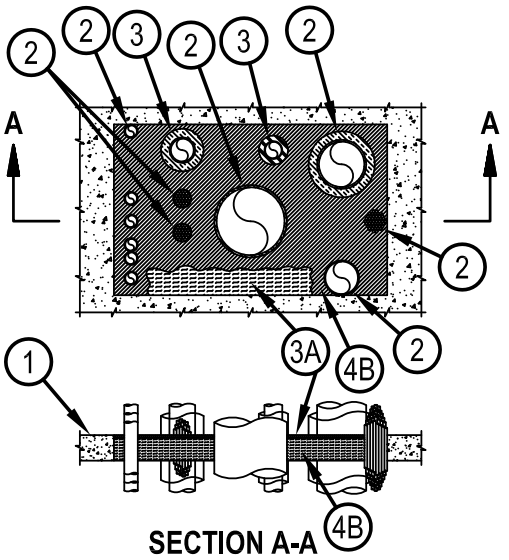

SECTION A-A

1. Floor or Wall Assembly — Min 4-1/2 in. (114 mm) thick reinforced lightweight or normal weight (100-150 pcf or 1600-2400 kg/m3) concrete floor. Min 5 in. (127 mm) thick reinforced lightweight or normal weight (100-150 pcf or 1600-2400 kg/m3) concrete wall. Wall may also be constructed of any UL Classified Concrete Blocks*. Max size of opening is 1440 in.2 (9,290 cm2) with a max dimension of 48 in. (1219 mm).

See Concrete Blocks (CAZT) category in the Fire Resistance Directory for names of manufacturers

2. Through-Penetrant — One cable tray and one or more pipes, tubes or cable bundles may be installed within the opening. The total number of through-penetrants is dependent on the size of the opening and the types and sizes of the penetrants. Any combination of the penetrants described below may be used provided that the following parameters relative to the annular spaces are maintained. The annular space between cable tray and all other penetrants shall be min 3 in. (76 mm). The annular space between individual cables and cable bundles shall be a min 1/2 in. (13 mm). The annular space between individual cables and cable bundles and other penetrants shall be a min 1/2 in. (13 mm) except that a min 2 in. (51 mm) shall be maintained between the cables and copper pipes and tubes greater than a nom 3 in. (76 mm) diam and steel and iron pipes and conduits greater than a nom 4 in. (102 mm) diam. The annular space between metallic pipes, conduit and tubes and insulated pipes and tubes shall be a min 2 in. (51 mm). The annular space between nom 3 in (76mm) diam (and smaller) copper pipes and tubes and between nom 4 in (102mm) diam (and smaller) steel and iron pipes and conduits shall be min 1/2 in. (13 mm). The annular space between nom 2 in. (51 mm) diam (and smaller) metallic pipes and conduits shall be min 0 in. (point contact). The annular space between insulated penetrants or the cable tray and the periphery of opening shall be min 1/2 in. (13 mm). The annular space between all other penetrants and the periphery of opening shall be min 0 in. (point contact). A max annular space in the system shall be 12 in. (305 mm). Penetrants to be rigidly supported on both sides of floor or wall assembly. The following types and sizes of penetrants may be used.

A. Metallic Pipes — The following types of metallic pipes, tubes or conduits may be used:

1. Copper Tubing — Nom 6 in. (152 mm) diam (or smaller) Type L (or heavier) copper tube.
2. Copper Pipe — Nom 6 in. (152 mm) diam (or smaller) Regular (or heavier) copper pipe.
3. Steel Pipe — Nom 24 in. (610 mm) diam (or smaller) Schedule 40 (or heavier) steel pipe.
4. Iron Pipe — Nom 24 in. (610 mm) diam (or smaller) cast or ductile iron pipe.
5. Conduit — Nom 4 in. (102 mm) diam (or smaller) electric metallic tubing (EMT) or nom 6 in. (152 mm) diam (or smaller) rigid steel conduit.

System No. C-AJ-8143

B. Cables Bundles — Max 4 in. (102 mm) diam tightly bundled cables. Any combination of the following types and sizes of cables may be used:
1. Max 500 kcmil single copper or aluminum conductor power cable with thermoplastic insulation and polyvinyl chloride (PVC) jacket.
2. Max 300 pair No. 24 AWG copper conductor telecommunication cables with PVC insulation and jacket material.
3. Max 7/C copper conductor No. 12 AWG multi-conductor power and control cables with PVC or cross-linked polyethylene (XLPE) insulation and PVC jacket.
4. Multiple fiber optical communication cables jacketed with PVC and having a max outside diam of 1/2 in.
5. Max 3/C No. 12 AWG steel clad cable with copper conductors and PVC insulation material.

C. Individual Cables — Any of the following types and sizes of individual (non-bundled) cables may be used:
1. Max 3/C No. 2/0 AWG (or smaller) copper conductor PVC jacketed aluminum clad or steel clad TECK 90 cable.
2. Through Penetrating Product* — Any cables, Armored Cable+ or Metal Clad Cable+ currently Classified under the Through Penetrating Product category.

See Through Penetrating Product (XHLY) category in the Fire Resistance Directory for names of manufacturers.

3. Max 500 kcmil single copper or aluminum conductor power cable with thermoplastic insulation and polyvinyl chloride (PVC) jacket.
4. Max 300 pair No. 24 AWG copper conductor telecommunication cables with PVC insulation and jacket material.
5. Max 7/C copper conductor No. 12 AWG multi-conductor power and control cables with PVC or cross-linked polyethylene (XLPE) insulation and PVC jacket.
6. Multiple fiber optical communication cables jacketed with PVC and having a max outside diam of 1/2 in.
7. Max 3/C No. 12 AWG steel clad cable with copper conductors and PVC insulation material.
8. Max 4C/750 kcmil (or smaller) aluminum or copper conductor metal clad cable with aluminum or steel armor, with or without PVC jacket.

D. Cable Tray* — (Not Shown) — Max 24 in. (610 mm) wide by 6 in. (152 mm) deep open-ladder steel or aluminum cable tray. Aggregate cross-sectional area of cable tray to be max 40 percent of the cross-sectional area of the cable tray based on a max 3 in. cable loading depth. Any combination of the types and sizes of cables described in Item 2B may be used. Cable tray to be rigidly supported on both sides of floor or wall assembly.

3. Pipe Insulation — (Optional) - Pipes and tubes of the sizes noted below may be provided with one of the following types of pipe insulations::

A. Pipe Covering* — Nom 1-1/2 in. (38 mm) thick (or thinner) hollow cylindrical heavy density glass fiber units jacketed on the outside with an all service jacket for pipes with a nom diam of 8 in. (203 mm) (or smaller) or tubes with a nom diam of 4 in. (102 mm) (or smaller). Longitudinal joints sealed with metal fasteners or factory-applied self-sealing lap tape. Transverse joints secured with metal fasteners or with butt tape supplied with the product.

See Pipe and Equipment Covering - Materials (BRGU) category in the Building Materials Directory for names of manufacturers. Any pipe covering material meeting the above specifications and bearing the UL Classification Marking with a Flame Spread Index of 25 or less and a Smoke Developed Index of 50 or less may be used.

B. Pipe Covering* — Nom 2 in. (51 mm) thick (or thinner) hollow cylindrical heavy density glass fiber units jacketed on the outside with an all service jacket for pipes or tubes with a nom diam of 2 in. (51 mm) (or smaller). Longitudinal joints sealed with metal fasteners or factory-applied self-sealing lap tape. Transverse joints secured with metal fasteners or with butt tape supplied with the product.

See Pipe and Equipment Covering - Materials (BRGU) category in the Building Materials Directory for names of manufacturers. Any pipe covering material meeting the above specifications and bearing the UL Classification Marking with a Flame Spread Index of 25 or less and a Smoke Developed Index of 50 or less may be used.

C. Tube Insulation-Plastics+ — Nom 1 in. (25 mm) thick (or thinner) acrylonitrile butadiene/polyvinyl chloride (AB/PVC) flexible foam furnished in the form of tubing for pipes or tubes with a nom diam of 2 in. (51 mm) (or smaller).

See Plastics (QMFZ2) category in the Plastics Recognized Component Directory for names of manufacturers. Any Recognized Component tube insulation material meeting the above specifications and having a UL 94 Flammability Classification of 94-5VA may be used.

4. Firestop System — The firestop system shall consist of the following:

A. Packing Material — Min 4 in. (102 mm) thickness of 4 pcf (64 kg/m3) mineral wool batt insulation tightly packed into the opening as a permanent form. Packing material to be recessed from top surface of floor or both surfaces of wall to accommodate the required thickness of fill material.

B. Fill, Void or Cavity Material - Sealant* — Min 1/2 in. (13 mm) thickness of fill material applied within the annulus flush with the top surface of the floor or both surfaces of the wall.

HILTI CONSTRUCTION CHEMICALS, DIV OF HILTI INC — FS-ONE Sealant or FS-ONE MAX Intumescent Sealant.

* Indicates such products shall bear the UL or cUL Certification Mark for jurisdictions employing the UL or cUL Certification (such as Canada), respectively.

Classified by
Underwriters Laboratories, Inc.
to UL 1479 and CAN/ULC-S115

System No. W-J-1116

F Ratings — 1 and 2 Hr
T Rating — 1/2 Hr

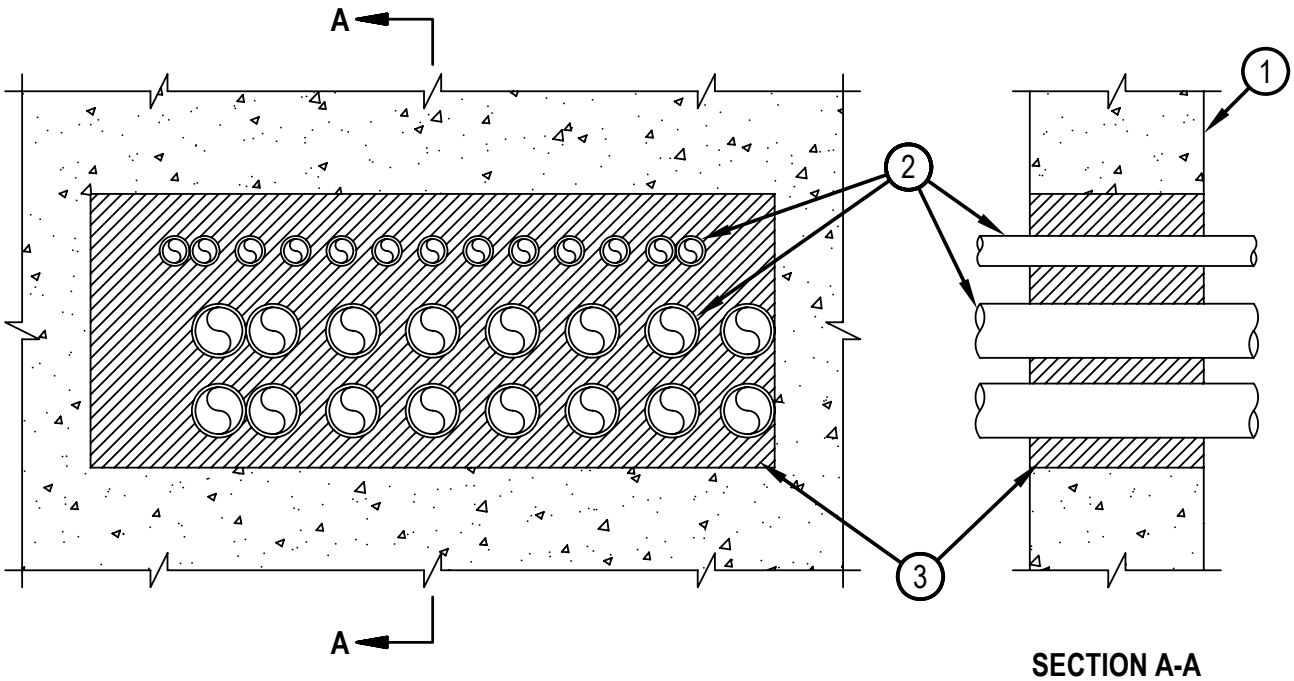

SECTION A-A

1. Floor or Wall Assembly — Min 4-3/4 in. and 6 in. thick reinforced lightweight or normal weight (100-150 pcf) concrete for 1 and 2 Hr, respectively. Wall may also be constructed of any solid or filled UL Classified Concrete Blocks*. Max area of opening is 360 in.2 with max dimension of 30 in. See Concrete Blocks (CAZT) category in the Fire Resistance Directory for names of manufacturers.
2. Through Penetrants — One or more nom 2 in. diam (or smaller) rigid steel conduit or electrical metallic tubing (EMT) to be installed within the opening. The annular space between conduits or tubing shall be min 0 in. (point contact) to max 3-3/8 in. The annular space between conduits or tubing and periphery of opening shall be min 0 in. (point contact) to max 3 in. Conduit or tubing to be rigidly supported on both sides of wall assembly.
3. Fill Void or Cavity Material - Foam* — Fill material applied within annulus flush with one surface of the wall. Min fill material thickness for 1 Hr F Rating is 4-3/4 in. Min fill material thickness for 2 Hr F Rating is 6 in.
   HILTI CONSTRUCTION CHEMICALS, DIV OF HILTI INC — CP 620 Fire Foam

*Bearing the UL Classification Mark

Hilti Firestop Systems

Reproduced by HILTI, Inc. Courtesy of
Underwriters Laboratories, Inc.
March 06, 2002

Classified by
Underwriters Laboratories, Inc.
to UL 1479 and CAN/ULC-S115

System No. W-J-8007

ANSI/UL1479 (ASTM E814)	CAN/ULC S115
F Rating — 4 Hr	F Rating — 4 Hr
T Rating — 0 Hr	FT Rating — 0 Hr
	FH Rating — 4 Hr
	FTH Rating — 0 Hr

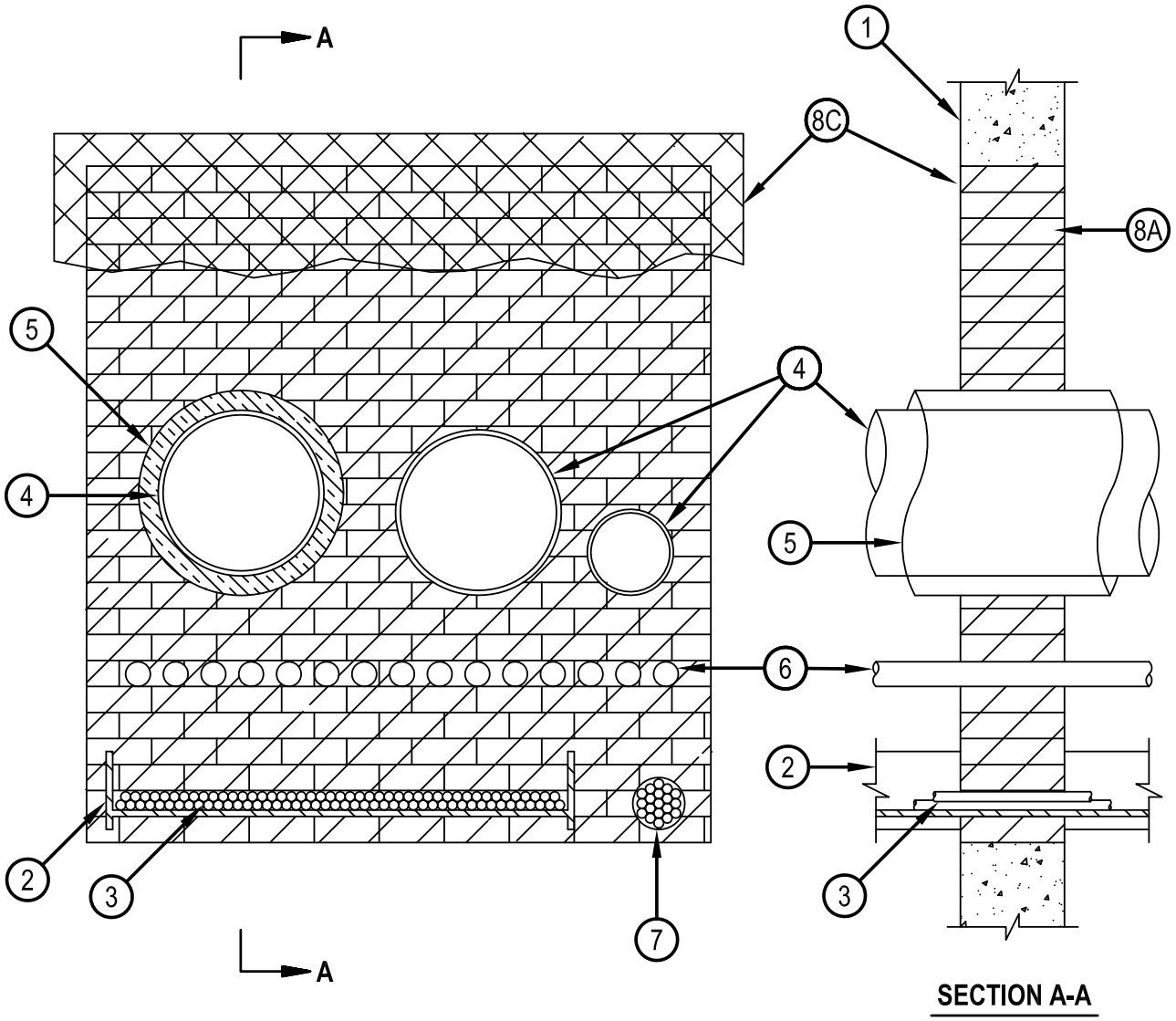

SECTION A-A

Hilti Firestop Systems

Reproduced by HILTI, Inc. Courtesy of
Underwriters Laboratories, Inc.
January 21, 2015

System No. W-J-8007

1. Wall Assembly — Min 7-5/8 in. (194 mm) thick wall assembly constructed of any UL Classified Concrete Blocks*. Max area of opening is 2496 in. sq. (161 m2) with max dimension of 52 in. (1321 mm).
   See Concrete Blocks (CAZT) category in the Fire Resistance Directory for names of manufacturers.
2. Cable Tray* — Max 36 in. (914 mm) wide by 6 in. (152 mm) deep open-ladder cable tray with channel-shaped side rails formed of 0.067 in. (1.7 mm) thick aluminum and with 1-1/2 in. (38 mm) wide by 3/4 in. (19 mm) deep channel-shaped rungs spaced 10 in. (254 mm) OC. One cable tray to be installed in the opening. The annular space between adjacent penetrating items shall be min 2 in. (51 mm) to max 4-1/2 in. (114 mm). The max annular space between the periphery of the opening shall be min 1 in. (25 mm) to max 3 in. (76 mm). Cable tray to be rigidly supported on both sides of wall assembly.
3. Cables — Aggregate cross-sectional area of cables in cable tray to be max 40 percent of the cross-sectional area of the cable tray based on a max 6 in. (152 mm) cable loading depth within the cable tray. Any combination of the following types and sizes of cables may be used:
   A. 300 pair — No. 24 AWG telephone cable with polyvinyl chloride (PVC) insulation and PVC jacket.
   B. 1/C - 500 kcmil with thermoplastic insulation and nylon jacket.
   C. 24 fiber optic cable with polyvinyl chloride (PVC) outer and subunit jacket.
   D. 7/C No. 12 AWG cable with polyvinyl chloride (PVC) insulation and PVC jacket.
4. Through Penetrants — One or more pipes or tubes to be installed within the opening. The total number of through-penetrants is dependent on the size of the opening and types and sizes of the penetrants. Any combination of the penetrants described below may be used provided that the following parameters relative to the annular spaces and the spacings between the pipes are maintained. The space between pipes, conduits or tubing shall be min 1-1/2 in.(38 mm) to max 4-3/4 in. (121 mm). The space between the periphery of the opening and the pipes or conduits shall be min 3 in. (76 mm) to max 4-1/4 in. (108 mm). Pipe, conduit or tubing to be rigidly supported on both sides of the wall assembly. The following types and sizes of metallic pipes, conduits or tubing may be used:
   A. Steel Pipe — Nom 12 in. (305 mm) diam (or smaller) Schedule 10 (or heavier) steel pipe.
   B. Iron Pipe — Nom 12 in. (305 mm) diam (or smaller) cast or ductile iron pipe.
   C. Conduit — Nom 4 in. (102 mm) diam (or smaller) steel electric metallic tubing or 6 in. (152 mm) diam steel conduit.
   D. Copper Tubing — Nom 6 in. (152 mm) diam (or smaller) Type L (or heavier) copper tubing.
   E. Copper Pipe — Nom 6 in. (152 mm) diam (or smaller) Regular (or heavier) copper pipe.
5. Pipe Covering* — Nom 1-1/2 in. (38 mm) thick hollow cylindrical heavy density (3.5 pcfor 56 kg/m3) glass fiber units jacketed of the outside with an all service jacket. Longitudinal joints sealed with metal fasteners or factory-applied self-sealing lap tape. Transverse joints secured with metal fasteners or with butt tape supplied with the product.
   See Pipe Equipment Covering — Materials — (BRGU) category in the Building Materials Directory for names of manufacturers. Any pipe covering material meeting the above specifications and bearing the UL Classification Marking with a Flame Spread Index of 25 or less and a Smoke Developed Index of 50 or less may be used.

5A. Metal Jacket — (Not Shown) — Required when pipe covering (Item 5) is used. Min 6 in. (152 mm) long jacket formed of min 0.010 in. (0.25 mm) thick steel sheet cut to wrap tightly around the pipe insulation with a min 2 in. (51 mm) lap. Jacket secured with min 1/2 in. (13 mm) wide stainless steel hose clamp located at the center of the jacket. Jacket to be installed on both surfaces of wall and recessed into the opening 1 in. (25 mm).

6. Conduit — Nom 2 in .(51 mm) diam steel electrical metallic tubing or steel conduit. A max of thirteen conduit or tubing to be installed within the opening. The space between adjacent conduits or tubing shall be 1-1/8 in. (28 mm). The space between conduits or tubing and the periphery of the opening shall be min 1-1/8 in.(28 mm) to max 2-1/2 in. (64 mm). The space between conduits or tubing and other types of penetrating items shall be min 4-1/2 in (114 mm) to max 4-3/4 in. (121 mm). Conduit or tubing to be rigidly supported on both sides of the wall assembly.

Reproduced by HILTI, Inc. Courtesy of
Underwriters Laboratories, Inc.
January 21, 2015

System No. W-J-8007

7. Cables — Max 4 in. (102 mm) diam tight bundle. The space between the bundle and adjacent penetrating items shall be min 2 in. (51 mm) to 6 in. (152 mm) max and between the periphery of the opening and the bundle shall be min 1-1/2 in. (38 mm) and 2-1/4 in. (57 mm) max. Cable bundle to be rigidly supported on both sides of the wall assembly. Any combination of the following types and sizes of cables may be used:
   A. 300 pair — No. 24 AWG telephone cable with polyvinyl chloride (PVC) insulation and PVC jacket.
   B. 24 fiber optic cable with polyvinyl chloride (PVC) outer and submit jacket.
   C. 7/C No. 12 AWG cable with polyvinyl chloride (PVC) insulation and PVC jacket.
   D. RGU/59 coaxial cable with polyvinyl chloride (PVC) insulation and PVC jacket.
   E. 2/C No. 10 AWG cable with ground with polyvinyl chloride (PVC) insulation and PVC jacket.
   F. Three 1/C No. 18 AWG wire with polyvinyl chloride (PVC) insulation in a nom 3/4 in. flexible metal conduit.
8. Firestop System — The firestop system shall consist of the following:
   A. Fill, Void or Cavity Material* — Fire blocks installed with long dimension passed through the opening from surface to surface. Blocks to be firmly packed and completely fill the entire opening. Either one or a combination of the block types specified below may be used.
   HILTI CONSTRUCTION CHEMICALS, DIV OF HILTI INC — FS 657 Fire Block or CFS-BL Firestop Block
   B. Fill, Void or Cavity Material* — Fill material to be forced into interstices of cables, between cables and cable tray, between the penetrants and the Fire Blocks and in obvious openings between blocks, and between blocks and the periphery of the opening to the max extent possible on both surfaces of wall.
   HILTI CONSTRUCTION CHEMICALS, DIV OF HILTI INC — FS-ONE Sealant, FS-ONE MAX Intumescent Sealant or CP 618 Putty Stick
   C. Wire Mesh — When the annular space exceeds 4 in. (102 mm) to the periphery, a nom 2 sq. in. (12.9 cm2) wire fencing shall be used to keep the blocks in place. The wire fencing is fabricated from min No. 16 SWG (0.060 in.) galv steel wire. The wire is cut to fit the contour of the penetrating item with a min 3 in. (76 mm) lap beyond the periphery of the opening. Wire fencing secured to both surfaces of the wall assembly by means of 1/4 in. (6 mm) diam by 4-3/16 in. (106 mm) long hollow wall anchors and 1/4 in. (6 mm) by 1-1/2 in. (38 mm) diam fender washers spaced max 8 in. (203 mm) OC.

* Indicates such products shall bear the UL or cUL Certification Mark for jurisdictions employing the UL or cUL Certification (such as Canada), respectively.

Reproduced by HILTI, Inc. Courtesy of
Underwriters Laboratories, Inc.
January 21, 2015

System No. W-J-8039

Classified by Underwriters Laboratories, Inc. to UL 1479

ANSI/UL1479 (ASTM E814)	CAN/ULC S115
F Rating — 2 Hr	F Rating — 2 Hr
T Rating — 1/2 Hr	FT Rating — 1/2 Hr
	FH Rating — 2 Hr
	FTH Rating — 1/2 Hr

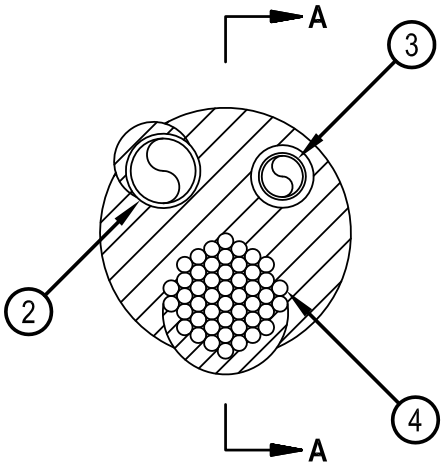

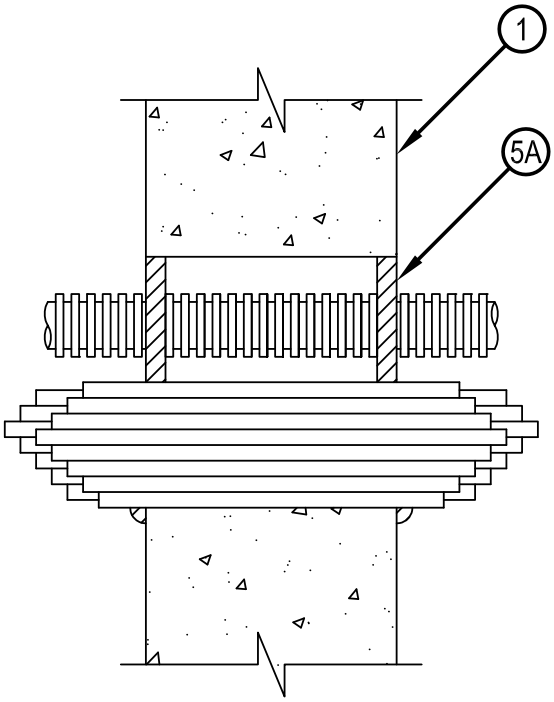

SECTION A-A

Reproduced by HILTI, Inc. Courtesy of Underwriters Laboratories, Inc.
January 21, 2015

System No. W-J-8039

1. Wall Assembly — Min 6 in. (152 mm) thick reinforced lightweight or normal weight (100-150 pcf or 1600-2400 kg/m3) concrete. Wall may also be constructed of any UL Classified Concrete Blocks*. Max diam of opening is 8 in. (203 mm).
   See Concrete Blocks (CAZT) category in the Fire Resistance Directory for names of manufacturers.
2. Metallic Penetrants — One or more metallic pipes, conduits or tubing installed concentrically or eccentrically within the opening. Annular space between metallic penetrants and periphery of opening to be min 0 in. (point contact) to max 2 in. (51 mm). Annular space between metallic penetrants, nonmetallic penetrant and cables to be min 1/2 in. (13 mm) to max 1-1/2 in. (38 mm). Metallic pipes, conduit or tubing to be rigidly supported on both sides of wall assembly. The following types and sizes of metallic pipes, conduits or tubing may be installed within the opening:
   A. Steel Pipe — Nom 2 in. (51 mm) diam (or smaller) Schedule 10 (or heavier) steel pipe.
   B. Iron Pipe — Nom 2 in. (51 mm) diam (or smaller) cast or ductile iron pipe.
   C. Conduit — Nom 2 in. (51 mm) diam (or smaller) rigid steel conduit or electrical metallic tubing (EMT).
3. Electrical Nonmetallic Tubing (ENT)+ — Nom 2 in. (51 mm) diam (or smaller) ENT formed of PVC, installed in accordance with Article 331 of the National Electrical Code (NFPA No. 70). Max one ENT installed concentrically or eccentrically within the opening. Annular space between ENT and periphery of opening to be min 1/4 in. (6 mm) to max 2 in. (51 mm). Annular space between ENT and metallic penetrants or cables to be min 1/2 in. (13 mm) to max 1-1/2 in. (38 mm). ENT to be rigidly supported on both sides of the wall assembly.
   See Electrical Nonmetallic Tubing (FKHU) in UL Electrical Construction Materials Directory for names of manufacturers.
4. Cables — Nom 4 in. (102 mm) diam (or smaller) tight bundle of cables. Cable bundle spaced 0 in. (point contact) to 2 in. (51 mm) from periphery of opening. Cable bundle to be rigidly supported on both sides of wall assembly. Any combination of the following types and sizes of cables may be used:
   A. Max 200 pair No. 24 AWG (or smaller) copper conductor with polyvinyl chloride (PVC) insulation and jacket materials.
   B. Max 1/C No. 500 kcmil (or smaller) copper conductor cable with cross-linked polyethylene (XLPE) jacket.
   C. Max 3/C with ground No. 2/0 AWG (or smaller) aluminum conductor SER cables with PVC insulation and jacket.
   D. Max 3/C No. 8 AWG (or smaller) copper conductor metal clad cable.
   E. Max 4 pair No. 24 AWG (or smaller) copper conductor communication cable.
   F. Max RG/U coaxial cable with fluorinated ethylene insulation and jacket.
5. Firestop System — The firestop system shall consist of the following:
   A. Fill, Void or Cavity Material* - Sealant — Min 5/8 in. (16 mm) thickness of fill material applied within annulus flush with both surfaces of wall. At point contact locations, apply a min 1/2 in. (13 mm) diam bead of fill material at the penetrant/wall interface.
   HILTI CONSTRUCTION CHEMICALS, DIV OF HILTI INC — FS-One Sealant or FS-ONE MAX Intumescent Sealant

* Indicates such products shall bear the UL or cUL Certification Mark for jurisdictions employing the UL or cUL Certification (such as Canada), respectively.

+Bearing the UL Listing Mark

Reproduced by HILTI, Inc. Courtesy of
Underwriters Laboratories, Inc.
January 21, 2015

Classified by
Underwriters Laboratories, Inc.
to UL 1479

System No. W-J-8043

F Rating —2 Hr

T Ratings — 0, 1/2, 3/4, 1-1/2 ,2 Hr (See Items 2,3 and 4)

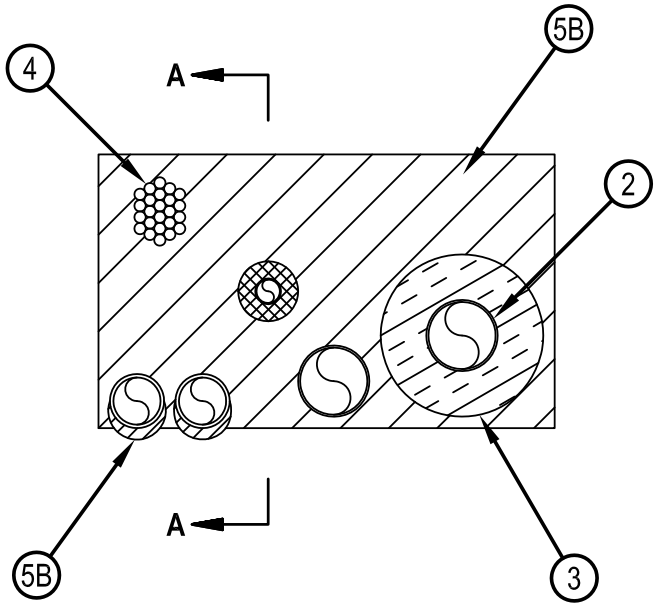

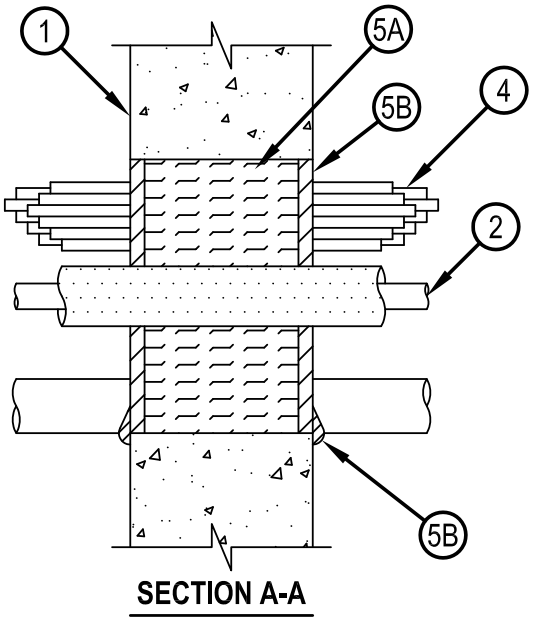

SECTION A-A

1. Wall Assembly — Min 6 in. (152 mm) thick reinforced lightweight or normal weight (100-150 pcf) concrete. Wall may also be constructed of any UL Classified Concrete Blocks*. Max area of square, rectangular, or circular opening is 240 sq in.(1548 cm2 with max dimension of 20 in.(508 mm)

   See Concrete Blocks (CAZT) category in the Fire Resistance Directory for names of manufacturers.

2. Through-Penetrant — One or more pipes, conduit or tubes to be installed within the opening. The total number of through-penetrants is dependent on the size of the opening and the types and sizes of the penetrants. Any combination of the penetrants described below may be used provided that the following parameters relative to the annular spaces and the spacing between the through penetrants are maintained. The separation between the penetrants shall be min 1 in. (25 mm) to max 22 in. (560 mm). The annular space between penetrants and the periphery of opening shall be min 0 in. (0 mm, point contact) to max 22 in. (560mm). Pipes, conduit or tubes to be rigidly supported on both sides of wall assembly. The following types and sizes of pipes, conduit or tubes may be used.

   A. Copper Tubing — Nom 3 in. (76 mm) diam (or smaller) Type L (or heavier) copper tube.

   B. Copper Pipe — Nom 3 in. (76 mm) diam (or smaller) Regular (or heavier) copper pipe.

   C. Steel Pipe — Nom 4 in. (102 mm) diam (or smaller) Schedule 10 (or heavier) steel pipe.

   D Iron Pipe — Nom 4 in. (102 mm) diam (or smaller) cast or ductile iron pipe.

   E Conduit — Nom 3 in. (76 mm) diam (or smaller) electric metallic tubing (EMT) or rigid steel conduit.

   F Polyvinyl Chloride (PVC) Pipe — Nom 2 in. (51 mm) diam (or smaller) Schedule 40 cellular or solid core PVC pipe for use in closed (process or supply) or vented (drain, waste, or vent) piping systems.

   G Chlorinated Polyvinyl Chloride (CPVC) Pipe — Nom 2 in. (51 mm) diam (or smaller) SDR 13.5 CPVC pipe for use in closed (process or supply) piping systems.

   T Rating is 0 Hr if bare pipe and tubing is used.

Reproduced by HILTI, Inc. Courtesy of
Underwriters Laboratories, Inc.
January 21, 2015

System No. W-J-8043

3. Pipe Insulation — One or more metallic penetrants (pipe or tubing) may be insulated with the following types of pipe coverings:

A. Pipe Covering* — Min 1 in. (25 mm) to max 2 in. (51 mm) thick hollow cylindrical heavy density min 3.5 pcf (56 kg/m3) glass fiber units jacketed on the outside with an all service jacket. Longitudinal joints sealed with metal fasteners or factory-applied self-sealing lap tape. Transverse joints secured with metal fasteners or with butt tape supplied with the product.

See Pipe and Equipment Covering - Materials (BRGU) category in the Building Materials Directory for names of manufacturers. Any pipe covering material meeting the above specifications and bearing the UL Classification Marking with a Flame Spread Index of 25 or less and a Smoke Developed Index of 50 or less may be used.

B. Tube Insulation-Plastics+ — Min 1/2 in. (13 mm) to max 3/4 in. (19 mm) thick acrylonitrile butadiene/polyvinyl chloride (AB/PVC) flexible foam furnished in the form of tubing.

See Plastics+ (QMFZ2) category in the Plastics Recognized Component Directory for names of manufacturers. Any Recognized Component tube insulation material meeting the above specifications and having a UL 94 Flammability Classification of 94-5VA may be used.

The annular space between the insulated penetrants and the periphery of the opening shall be min 0 in. (0 mm, point contact) The separation between the insulated penetrants and the other penetrants shall be a min 1 in. (25 mm) to max 22 in (560 mm).

T Rating is 1-1/2 hour if Item 3B is used. T rating is 2 hr if Item 3A is used.

4. Cables — One max 3 in. (76 mm) diam bundle of cables installed within the opening and rigidly supported on both surfaces of wall. The annular space between the tightly-bundled cables and the periphery of the opening shall be min 0 in. (0 mm, point contact) to max 22 in. (560 mm). The separation between the cable bundle and the other penetrants shall be min 1 in. (25 mm) to max 22 in. (560 mm). Any combination of the following types and sizes of cables may be used:

A. Max 25 pair No. 24 AWG telephone cable with polyvinyl chloride (PVC) insulation and jacket.

B. Max 7/C No. 12 AWG copper conductor power and control cable with PVC or cross-linked polyethylene (XLPE) insulation and PVC jacket.

C. Multiple fiber optical communication cable jacketed with PVC and having a max outside diam of 1/2 in. (13 mm).

D. Max 3/C No. 8 AWG with bare aluminum ground, PVC insulated steel Metal-Clad+ Cable currently Classified under the Through Penetrating Product* (XHLY) category.

E Max 3/C (with ground) No. 8 AWG (or smaller) nonmetallic sheathed (Romex) cable with PVC insulation and jacket materials.

F. RG/U coaxial cable with polyethylene (PE) insulation and polyvinyl chloride (PVC) jacket having a max outside diam of 1/2 in. (13 mm).

G. Max 3/4 in. (19 mm) diam copper ground cable with or without PVC jacket.

H. Max 1-1/4 in. (32 mm) Diam single or multi conductor mineral-insulated copper-clad cable.

T Rating is 1/4 hr if cables D, G and H are used. T Rating is ¾ Hr for any other combination.

5. Firestop System — The firestop system shall consist of the following:

A. Packing Material — Min 4-3/4 in. (121 mm) thickness of min 4 pcf (64 kg/m3) mineral wool batt insulation firmly packed into opening as a permanent form. Packing material recessed from both surfaces of the wall to accommodate the required thickness of fill material.

B. Fill, Void or Cavity Material* — Sealant — Min 5/8 in. (16 mm) thickness of fill material applied within annulus, flush with both surfaces of wall. At the point contact location between through penetrants and periphery of opening, a min 1/2 in. (13 mm) diam bead of fill material shall be applied at the concrete/through penetrant interface on both surfaces of wall.

HILTI CONSTRUCTION CHEMICALS, DIV OF HILTI INC — FS-ONE Sealant or FS-ONE MAX Intumescent Sealant

* Indicates such products shall bear the UL or cUL Certification Mark for jurisdictions employing the UL or cUL Certification (such as Canada), respectively.

+ Bearing the UL Listing Mark

Bearing the UL Recognized Component Mark

Reproduced by HILTI, Inc. Courtesy of
Underwriters Laboratories, Inc.
January 21, 2015

Customer Hotline: Hong Kong 8228 8118, Macau 00800 8228 8118 Email: hksales@hilti.com

Classified by
Underwriters Laboratories, Inc.
to UL 1479 and CAN/ULC-S115

System No. W-L-1249

F Ratings - 1 and 2 Hr (See Items 1 and 3)
T Rating - 1/2 Hr

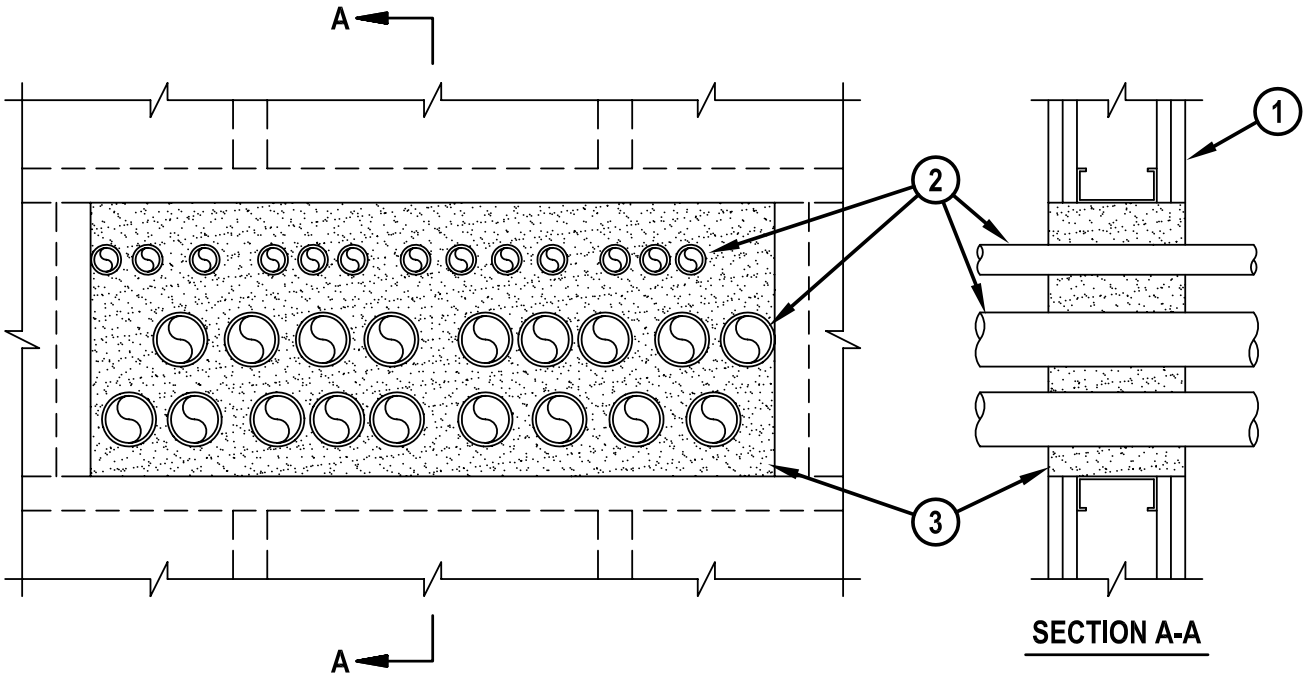

1. Wall Assembly The 1 or 2 hr fire-rated gypsum board/stud wall assembly shall be constructed of the materials and in the manner described in the individual U400 Series Wall or Partition Design in the UL Fire Resistance Directory and shall include the following construction features.
   A. Studs Steel studs 3-1/2 in. deep, fabricated from 25 MSG galv steel, spaced max 24 in. OC.
   B. Gypsum Boards* The gypsum board type, number of layers, fastener type and sheet orientation shall be as specified in the individual Wall and Partition Design. Max area of opening is 360 sq in. with max dimension of 30 in.

   The hourly F Rating of the firestop system is equal to the hourly fire rating of the wall assembly in which it is installed.
2. Through Penetrants One or more nom 2 in. diam (or smaller) rigid steel conduit or electrical metallic tubing (EMT) to be installed within the opening. The annular space between conduits or tubing shall be min 0 in. (point contact) to max 3-3/8 in. The annular space between conduits or tubing and periphery of opening shall be min 0 in. (point contact) to max 3 in. Conduit or tubing to be rigidly supported on both sides of wall assembly.
3. Fill Void or Cavity Material - Foam* Fill material applied within annulus flush with both surfaces of the wall. Min fill material thickness for 1 Hr F Rating is 4-3/4 in. Min fill material thickness for 2 Hr F Rating is 6 in.

   HILTI CONSTRUCTION CHEMICALS, DIV OF HILTI INC -- CP 620 Fire Foam

*Bearing the UL Classification Mark

Hilti Firestop Systems

Reproduced by HILTI, Inc. Courtesy of
Underwriters Laboratories, Inc.
December 7, 2001

System No. W-L-1408

Classified by Underwriters Laboratories, Inc. to UL 1479 and CAN/ULC-S115

ANSI/UL1479 (ASTM E814)	CAN/ULC S115
F Ratings — 1 and 2 Hr (See Item 1)	F Ratings — 1 and 2 Hr (See Item 1)
T Ratings — 0 and 1/4 Hr (See Item 1)	FT Ratings —0 and 1/4 Hr (See Item 1)
	FH Ratings — 1 and 2 Hr (See Item 1)
	FTH Ratings — 0 and 1/4 Hr (See Item 1)

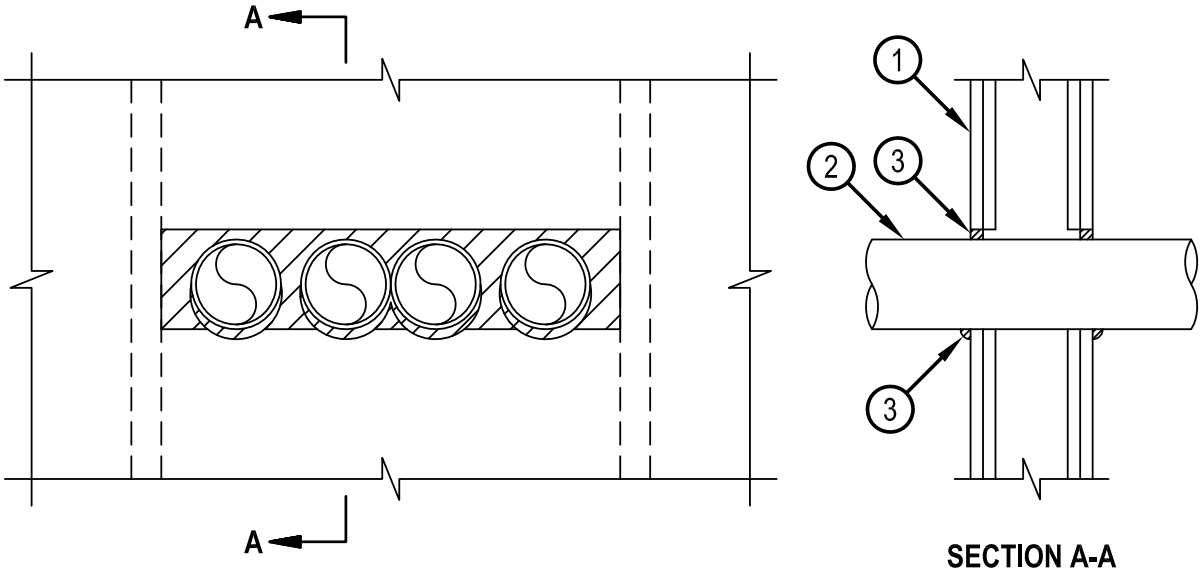

SECTION A-A

1. Wall Assembly — The 1 and 2 hr fire-rated gypsum board/stud wall assembly shall be constructed of the materials and in the manner described in the individual U400, V400 or W400 Series Wall and Partition Designs in the UL Fire Resistance Directory and shall include the following construction features:
   A. Studs — Wall framing shall consist of min 3-5/8 in. (92 mm) wide steel studs spaced max 24 in. (610 mm) OC.
   B. Gypsum Board* — Thickness, type, number of layers and fasteners, as specified in the individual Wall and Partition Design. Max area or opening is 114 in.2 (735 cm²) with max height of 5 in. (127 mm) and max width of 23 in. (584 mm).

   The hourly F, FH Ratings of the firestop system are equal to the hourly rating of the wall. The hourly T, FT, FTH Ratings of the firestop system is 0 hr and 1/4 hr when installed in 1 hr and 2 hr fire rated wall assemblies, respectively.
2. Through Penetrants — Multiple pipes or conduits installed in single layer array within the firestop system. The annular space between the pipes and conduits and the edges of the opening shall be min 0 in. (0 mm, point contact) to max 1 in. (25 mm). The separation between pipes and conduits to be a min 0 in. (0 mm, point contact) to a max 1-1/2 in. (38 mm). Pipes and conduits to be rigidly supported on both sides of wall assembly. The following types and sizes of metallic pipes or conduits may be used:
   A. Steel Pipe — Nom 4 in. (102 mm) diam (or smaller) Schedule 5 (or heavier) steel pipe.
   B. Conduit — Nom 4 in. (102 mm) diam (or smaller) rigid steel conduit or steel electrical metallic tubing (EMT).
3. Fill Void or Cavity Materials* - Sealant — Min 5/8 in. (16 mm) thickness of fill material installed to completely fill annular space between pipes, conduits and gypsum flush with each surface of wall. Min 1/2 in. (13 mm) diam bead of fill material applied to the through penetrant/wall interface at the point contact locations on both sides of the wall.

   HILTI CONSTRUCTION CHEMICALS, DIV OF HILTI INC — FS-ONE Sealant, or FS-ONE MAX Intumescent Sealant

* Indicates such products shall bear the UL or cUL Certification Mark for jurisdictions employing the UL or cUL Certification (such as Canada), respectively.

Hilti Firestop Systems

Reproduced by HILTI, Inc. Courtesy of Underwriters Laboratories, Inc.
January 26, 2015

Classified by
Underwriters Laboratories, Inc.
to UL 1479

System No. W-L-8019

F Rating -- 1 and 2 Hr (See Items 1, 3 and 4)
T Rating -- 0, 1/2, 1, 1-1/2 and 2 Hr (See Item 2)

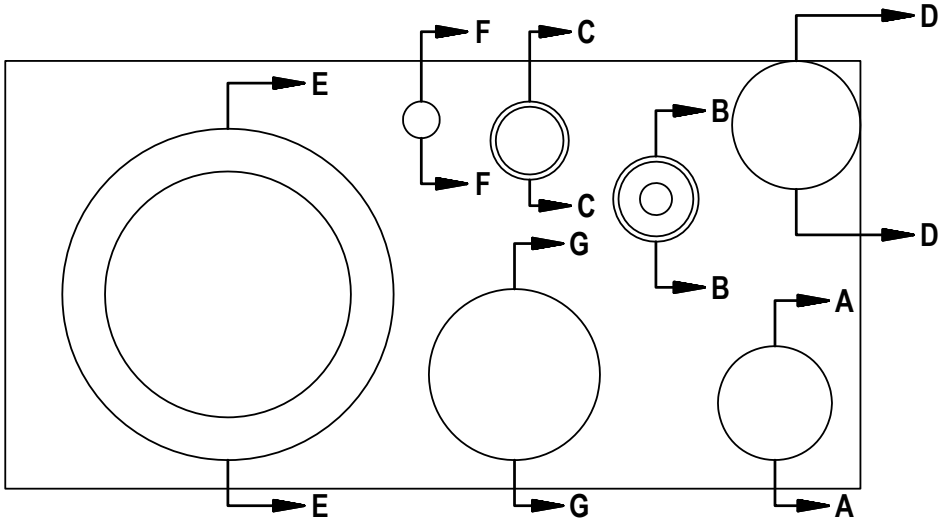

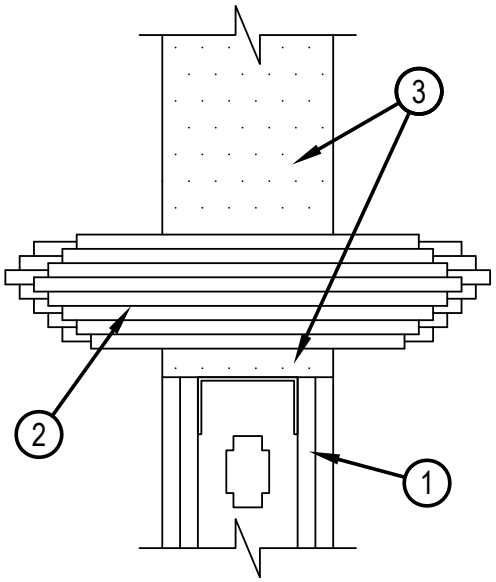

FIRESTOP CONFIGURATION A

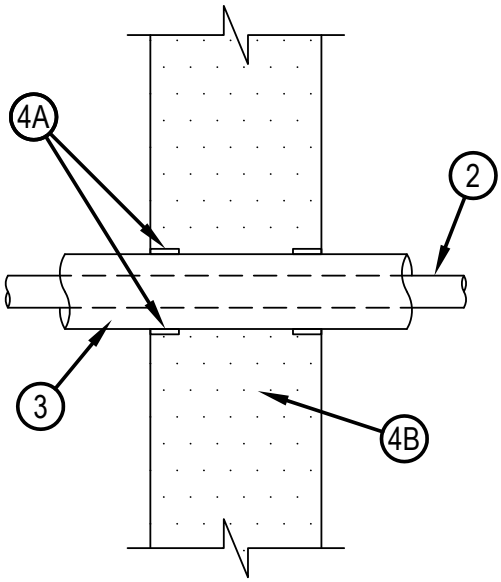

FIRESTOP CONFIGURATION B

Reproduced by HILTI, Inc. Courtesy of
Underwriters Laboratories, Inc.
April 22, 2005

Classified by
Underwriters Laboratories, Inc.
to UL 1479

System No. W-L-8019

F Rating -- 1 and 2 Hr (See Items 1, 3 and 4)
T Rating -- 0, 1/2, 1, 1-1/2 and 2 Hr (See Item 2)

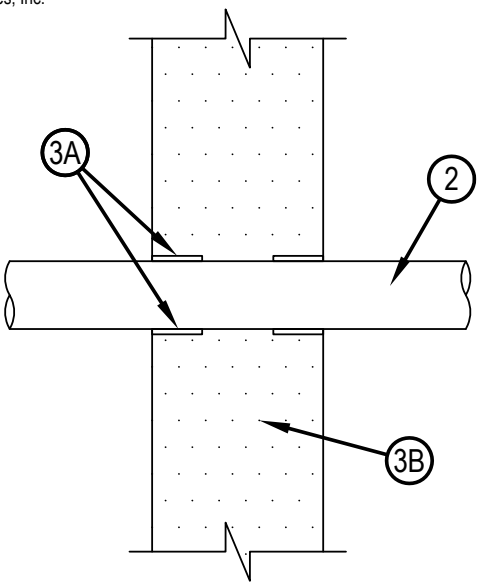

FIRESTOP CONFIGURATION C

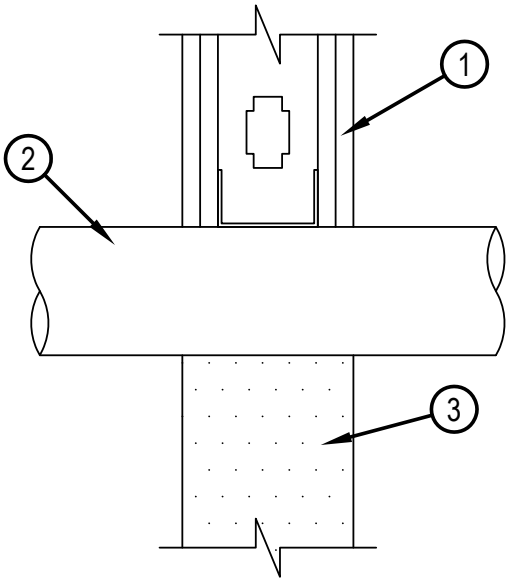

FIRESTOP CONFIGURATION D

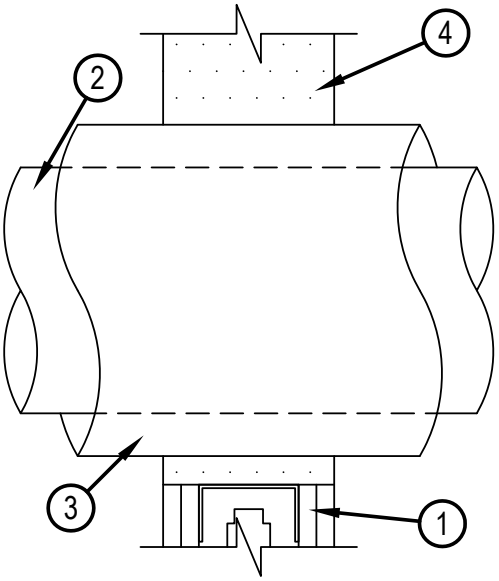

FIRESTOP CONFIGURATION E

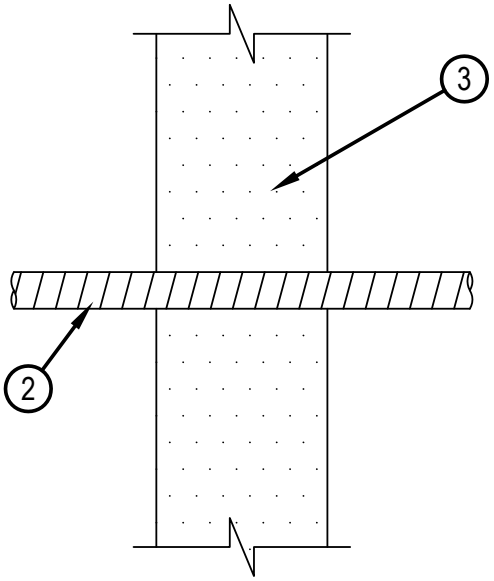

FIRESTOP CONFIGURATION F

Reproduced by HILTI, Inc. Courtesy of
Underwriters Laboratories, Inc.
April 22, 2005

Classified by
Underwriters Laboratories, Inc.
to UL 1479

System No. W-L-8019

F Rating -- 1 and 2 Hr (See Items 1, 3 and 4)
T Rating -- 0, 1/2, 1, 1-1/2 and 2 Hr (See Item 2)

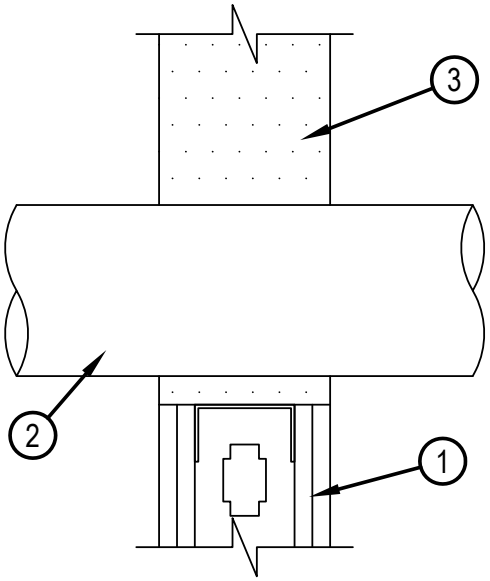

FIRESTOP CONFIGURATION G

1. Wall Assembly -- The 1 or 2 hr fire-rated gypsum board/stud wall assembly shall be constructed of the materials and in the manner described in the individual U400 Series Wall or Partition Design in the UL Fire Resistance Directory and shall include the following construction features:
   A. Studs -- Steel studs 3-1/2 in. deep, fabricated from 25 MSG galv steel, spaced max 24 in. OC.
   B. Gypsum Board* -- The gypsum board type, number of layers, fastener type and sheet orientation shall be as specified in the individual Wall and Partition Design. Max area of opening is 450 sq in with max dimension of 30 in.
   The hourly F Rating of the firestop system is equal to the hourly fire rating of the wall asembly in which it is installed.
2. Through Penetrants -- A max of seven firestop configurations may be installed within the opening. The space between firestop configurations. Unless otherwise indicated, the space between firestop configurations and periphery of opening shall be min 3/8 in. Pipe, conduit, tubing or cables to be rigidly supported on both sides of floor or wall assembly. The T Rating of the sytem is dependent on the firestop configurations, as shown in the table below. Any combination of the following firestop configurations detailed herein may be used:

Firestop Configuration	1 Hr F Rating	2 Hr F Rating
	T Rating Hr	T Rating Hr
A	0	1/2
B	1	1-1/2
C	1/2	1
D	0	0
E	1	2
F	0	0
G	0	0

Reproduced by HILTI, Inc. Courtesy of
Underwriters Laboratories, Inc.
April 22, 2005

Classified by
Underwriters Laboratories, Inc.
to UL 1479

System No. W-L-8019

F Rating -- 1 and 2 Hr (See Items 1, 3 and 4)
T Rating -- 0, 1/2, 1, 1-1/2 and 2 Hr (See Item 2)

2. Cables -- Max 4 in. diam tightly bundled cable. The min space between adjacent penetrants shall be 4 in. Cable bundle may be any combination of the following types and sizes of cables:
   G. Max 25 pair No. 24 AWG copper telephone cable with polyvinyl chloride (PVC) insulation and jacket materials.
   H. Max 7/C No. 12 AWG cable with PVC insulation and jacket materials.
   I. Multiple fiber optical communication cables with PVC jacket material and having a max outside diameter of 3/8 in.
   J. Max 3/C No. 12 AWG steel clad cables with PVC insulation and jacket materials.
   K. Max 3/C No. 8 AWG cablew with ground with PVC insulation and jacket materials.
   L. Max RG 59 coaxial cables with PVC insulation and jacket materials.
3. Fill, Void or Cavity Material* - Foam -- Fill materiial applied within annulus flush with both surfaces of the wall. Min fill material thickness for 1 hr F Rating is 4-3/4 in. Min fill material thickness for 2 hr F Rating is 6 in.
   HILTI CONSTRUCTION CHEMICALS, DIV OF HILTI INC -- CP 620 Fire Foam

Firestop Configuration B

2. Copper Tuber or Pipe -- Nom 1 in. diam (or smaller) Type L copper tube or nom 1 in diam (or smaller) Regulary (or heavier) copper pipe. Min space between adjacent penetrants shall be 3 in.
3. Tube Insulation - Plastics+ -- Nom 3/4 in. thick acrylonitrile butadiene/polyvinyl chloride (AB/PVC) flexible foam furnished in the form of tubing. The min space between adjacent penetrants shall be 1-1/2 in.
   See Plastics+ (QMFZ2) category in the Plastics Recognized Component Directory for names of manufacturers. Any Recognized Component tube insulation material meeting the above specifications and having a UL 94 Flammability Classificationof 94-5VA may be used.
4. Firestop System -- The firestop system shall consist of the following:
   A. Fill, Void or Cavity Material* - Wrap Strip -- Nom 3/16 in thick by 1 in wide intumescent wrap strip. The wrap strip is continuously wrapped around the outer circumference of the pipe covering one time and held in place with tape. Wrap strips are installed flush with each side of wall.
   HILTI CONSTRUCTION CHEMICALS, DIV OF HILTI INC -- CP 648-E W45/1-3/4 Wrap Strip
   B. Fill, Void or Cavity Material* - Foam -- Fill material applied within annulus flush with both surfaces of the wall. Min fill material thickness for 1 hr F Rating is 4-3/4 in. Min fill material thickness for 2 hr F Rating is 6 in.
   HILTI CONSTRUCTION CHEMICALS, DIV OF HILTI INC -- CP 620 Fire Foam

Firestop Configuration C

2. Polyvinyl Chloride (PVC) Pipe -- Nom 2 in. diam (or smaller) Schedule 40 solid or cellular core PVC pipe for use in closed (process or supply) or vented (drain, waste or vent) piping system. The min space between non-metallic penetrants shall be 1 in. The min space between metallic penetrants shall be 3-1/2 in.
3. Firestop System -- The firestop shall consist of the following:
   A. Fill, Void or Cavity Material* - Wrap Strip -- Nom 3/16 in thick by 1 in wide intumescent wrap strip. The wrap strip is continuously wrapped around the outer circumference of the pipe covering one time and held in place with tape. Wrap strips are installed flush with each side of wall.
   HILTI CONSTRUCTION CHEMICALS, DIV OF HILTI INC -- CP 648-E W25/1" Wrap Strip
   B. Fill, Void or Cavity Material* - Foam -- Fill material applied within annulus flush with both surfaces of the wall. Min fill material thickness for 1 hr F Rating is 4-3/4 in. Min fill material thickness for 2 hr F Rating is 6 in.
   HILTI CONSTRUCTION CHEMICALS, DIV OF HILTI INC -- CP 620 Fire Foam

Reproduced by HILTI, Inc. Courtesy of
Underwriters Laboratories, Inc.
April 22, 2005

Customer Hotline: Hong Kong 8228 8118, Macau 00800 8228 8118 Email: hksales@hilti.com

Classified by
Underwriters Laboratories, Inc.
to UL 1479

System No. W-L-8019

F Rating -- 1 and 2 Hr (See Items 1, 3 and 4)
T Rating -- 0, 1/2, 1, 1-1/2 and 2 Hr (See Item 2)

Firestop Configuration D

2. Through Penetrant -- One metallic pipe, conduit or tube to be installed either concentrically or eccentrically within the firestop system. The min annular space between the pipe, conduit or tube and the periphery of the opening shall be min. 0 in. (point contact). The annular space between adjacent penetrants shall be min 3-1/2 in. The following types and sizes of metallic pipes, conduits or tubes may be used:
   Steel Pipe -- Nom 4 in. diam (or smaller) Schedul 10 (or heavier) steel pipe.
   Iron Pipe -- Nom 4 in. diam (or smaller) cast or ductile iron pipe.
   Conduit -- Nom 4 in. diam (or smaller) rigid steel conduit.
   Conduit -- Nom 4 in. diam (or smaller) steel electrical metallic conduit.
   Copper Tubing -- Nom 4 in. diam (or smaller) Type L (or heavier) copper tubing.
   Copper Pipe -- Nom 4 in. diam (or smaller) Regular (or heavier) copper pipe.
3. Fill, Void or Cavity Material* - Foam -- Fill material applied within annulus flush with both surfaces of the wall. Min fill material thickess for 1 hr F Rating is 4-3/4 in. Min fill material thickness for 2 hr F Rating is 6 in.
   HILTI CONSTRUCTION CHEMICALS, DIV OF HILTI INC -- CP 620 Fire Foam

Firestop Configuration E

2. Steel Pipe -- Nom 8 in. diam (or smaller) Schedule 40 (or heavier) steel pipe.
3. Pipe Covering Materials* -- Nom 1-1/2 in. thick hollow cylindrical heavy density (min 3.5 pcf) glass fiber units jacketed on the outside with an all-service jacket. Longitudinal joints sealed with metal fasteners or factory-applied, self-sealing lap tape. Transverse joints secured with metal fasteners of with butt tape supplied with product. The min space between adjacent penetrants shall be 2 in.
   See Pipe and Equipment Covering - Materials (BRGU) Category in the Building Materials Directory for names of manufacturers. Any pipe covering meeting the above specifications and bearing the UL Classification Marking with a Flame Spread Index of 25 or less and a Smoke Developed Index of 50 or less may be used.
4. Fill, Void or Cavity Mateiral* - Foam -- Fill material applied within annulus flush with both surfaces of the wall. Min fill material thickness for 1 hr F Rating is 4-3/4 in. Min fill material thickness for 2 hr F Rating is 6 in.
   HILTI CONSTRUCTION CHEMICALS, DIV OF HILTI INC -- CP 620 Fire Foam

Firestop Configuration F

2. Flexible Conduit -- Nom 1 in. diam (or smaller) flexible steel conduit. The min space between adjacent penetrants shall be 3-1/2 in.
3. Fill, Void or Cavity Mateiral* - Foam -- Fill material applied within annulus flush with both surfaces of the wall. Min fill material thickness for 1 hr F Rating is 4-3/4 in. Min fill material thickness for 2 hr F Rating is 6 in.
   HILTI CONSTRUCTION CHEMICALS, DIV OF HILTI INC -- CP 620 Fire Foam

Firestop Configuration G

2. Steel Duct -- Nom 6 in. diam (or smaller) No. 28 gauge (or heavier) galve steel duct. The min space between adjacent penetrants shall be 1-1/2 in.
3. Fill, Void or Cavity Material* - Foam -- Fill material applied within annulus flush with both surfaces of the wall. Min fil material thickness for 1 hr F Rating is 4-3/4 in. Min fill material thickness for 2 hr F Rating is 6 in.
   HILTI CONSTRUCTION CHEMICALS, DIV OF HILTI INC -- CP 620 Fire Foam

*Bearing the UL Classification Mark

Reproduced by HILTI, Inc. Courtesy of
Underwriters Laboratories, Inc.
April 22, 2005

Classified by Underwriters Laboratories, Inc. to UL 1479

System No. W-L-8071

ANSI/UL1479 (ASTM E814)	CAN/ULC S115
F Rating — 1 and 2 Hr (See Item 1)	F Rating — 1 and 2 Hr (See Item 1)
T Rating — 0 and 1/2 Hr (See Item 2D)	FT Rating — 0 and 1/2 Hr (See Item 2D)
	FH Rating — 1 and 2 Hr (See Item 1)
	FTH Rating — 0 and 1/2 Hr (See Item 2D)

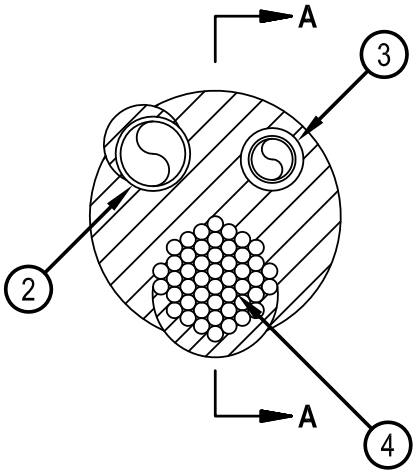

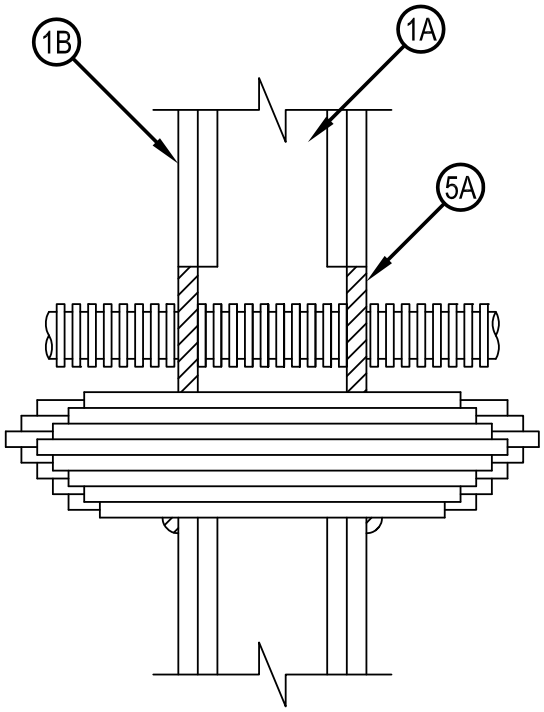

1. Wall Assembly — The 1 or 2 hr fire-rated gypsum board/stud wall assembly shall be constructed of the materials and in the manner specified in the individual U300, U400 or V400 Series Wall or Partition Design in the UL Fire Resistance Directory and shall include the following construction features:
   A. Studs — Wall framing may consist of either wood studs or steel channel studs. Wood studs to consist of nom 2 by 4 in. (51 by 102 mm) lumber spaced 16 in. (406 mm) OC. Steel studs to be min 3-1/2 in. (89 mm) wide and spaced max 24 in. (610 mm) OC.
   B. Gypsum Board* — Thickness, type, number of layers and fasteners as specified in the individual Wall and Partition Design. Max diam of opening is 8 in. (203 mm).
   The F and FH Ratings of the firestop system are dependent on the hourly fire rating of the wall assembly.

Reproduced by HILTI, Inc. Courtesy of Underwriters Laboratories, Inc.
January 28, 2015

System No. W-L-8071

2. Metallic Penetrants — One or more metallic pipes, conduits or tubing installed concentrically or eccentrically within the opening. Annular space between metallic penetrants and periphery of opening to be min 0 in. (point contact) to max 2 in. (51 mm). Annular space between metallic penetrants, nonmetallic penetrant and cables to be min 1/2 in. (13 mm) to max 1-1/2 in. (38 mm). Metallic pipes, conduit or tubing to be rigidly supported on both sides of wall assembly. The following types and sizes of metallic pipes, conduits or tubing may be installed within the opening:
   A. Steel Pipe — Nom 2 in. (51 mm) diam (or smaller) Schedule 10 (or heavier) steel pipe.
   B. Iron Pipe — Nom 2 in. (51 mm) diam (or smaller) cast or ductile iron pipe.
   C. Conduit — Nom 2 in. (51 mm) diam (or smaller) rigid steel conduit or electrical metallic tubing (EMT).
   D. Through Penetrating Product* — Flexible Metal Piping — The following types of steel flexible metal gas piping may be used:
      1.) Nom 2 in. (51 mm) diam (or smaller) steel flexible metal gas piping. Plastic covering on piping may or may not be removed on both sides of floor or wall assembly.
      OMEGA FLEX INC
      2.) Nom 1 in. (25 mm) diam (or smaller) steel flexible metal gas piping. Plastic covering on piping may or may not be removed on both sides of floor or wall assembly.
      GASTITE, DIV OF TITEFLEX
      3.) Nom 2 in. (51 mm) diam (or smaller) steel flexible metal gas piping. Plastic covering on piping may or may not be removed on both sides of floor or wall assembly.
      WARD MFG L L C
      The T, FT, FTH Ratings of the firestop system are 1/2 hr except that when Item 2D is used, the T Rating is 0 hr.
3. Electrical Nonmetallic Tubing (ENT)+ — Nom 2 in. (51 mm) diam (or smaller) ENT formed of PVC, installed in accordance with Article 331 of the National Electrical Code (NFPA No. 70). Max one ENT installed concentrically or eccentrically within the opening. Annular space between ENT and periphery of opening to be min 1/4 in. (6 mm) to max 2 in. (51 mm). Annular space between ENT and metallic penetrants or cables to be min 1/2 in. (13 mm) to max 1-1/2 in. (38 mm). ENT to be rigidly supported on both sides of the wall assembly.
   See Electrical Nonmetallic Tubing (FKHU) in UL Electrical Construction Materials Directory for names of manufacturers.
4. Cables — Nom 4 in. (102 mm) diam (or smaller) tight bundle of cables. Cable bundle spaced 0 in. (point contact) to 2 in. (51 mm) from periphery of opening. Cable bundle to be rigidly supported on both sides of wall assembly. Any combination of the following types and sizes of cables may be used:
   A. Max 200 pair No. 24 AWG (or smaller) copper conductor with polyvinyl chloride (PVC) insulation and jacket materials.
   B. Max 1/C No. 500 kcmil (or smaller) copper conductor cable with cross-linked polyethylene (XLPE) jacket.
   C. Max 3/C with ground No. 2/0 AWG (or smaller) aluminum conductor SER cables with PVC insulation and jacket.
   D. Max 3/C No. 8 AWG (or smaller) copper conductor metal clad cable.
   E. Max 4 pair No. 24 AWG (or smaller) copper conductor communication cable.
   F. Max RG/U coaxial cable with fluorinated ethylene insulation and jacket.
5. Firestop System — The firestop system shall consist of the following:
   A. Fill, Void or Cavity Material* - Sealant — Min 5/8 in. (16 mm) thickness of fill material applied within annulus flush with both surfaces of wall. At point contact locations, apply a min 1/2 in. (13 mm) diam bead of fill material at the penetrant/gypsum board interface.
   HILTI CONSTRUCTION CHEMICALS, DIV OF HILTI INC — FS-One Sealant or FS-ONE MAX Intumescent Sealant

* Indicates such products shall bear the UL or cUL Certification Mark for jurisdictions employing the UL or cUL Certification (such as Canada), respectively.

+Bearing the UL Listing Mark

Reproduced by HILTI, Inc. Courtesy of
Underwriters Laboratories, Inc.
January 28, 2015

System No. W-L-8079

Classified by Underwriters Laboratories, Inc. to UL 1479 and CAN/ULC-S115

ANSI/UL1479 (ASTM E814)	CAN/ULC S115
F Ratings — 1 and 2 Hr (See Item 1)	F Ratings — 1 and 2 Hr (See Item 1)
T Ratings — 0, 1/2, 3/4, 1-1/2 and 2 Hr (See Items 2, 3 and 4)	FT Ratings — 0, 1/2, 3/4, 1-1/2 and 2 Hr (See Items 2, 3 and 4)
	FH Ratings — 1 and 2 Hr (See Item 1)
	FTH Ratings — 0, 1/2, 3/4, 1-1/2 and 2 Hr (See Items 2, 3 and 4)

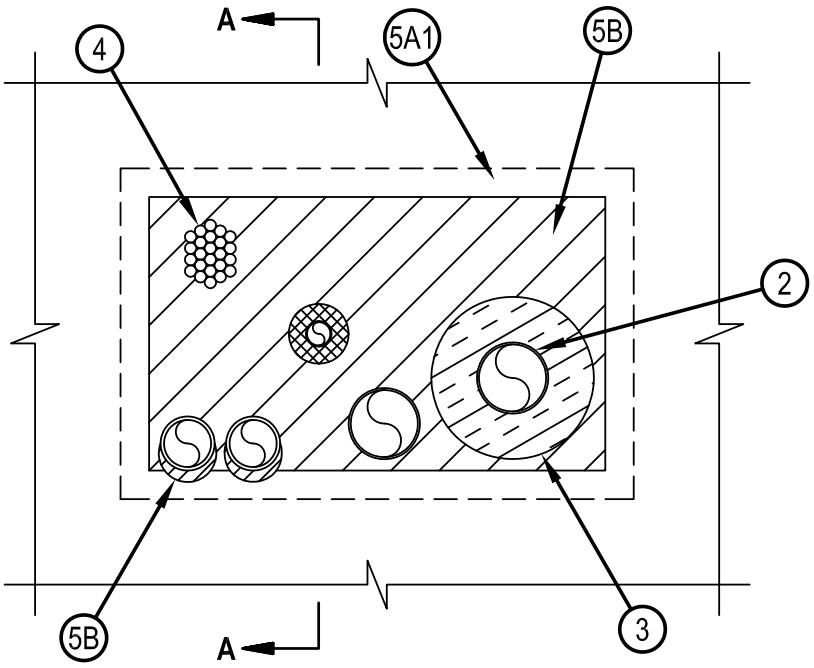

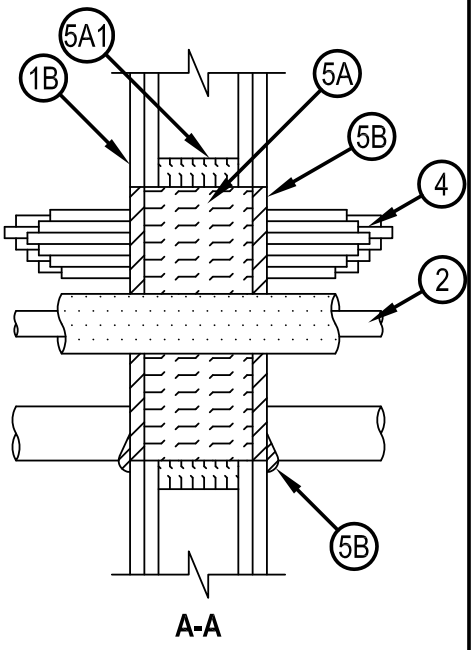

System tested with a pressure differential of 2.5 Pa between the exposed and the unexposed surfaces with the higher pressure on the exposed side.

1. Wall Assembly — The 1 or 2 hr fire rated gypsum board/stud wall assembly shall be constructed of the materials and in the manner specified in the individual U300, U400, V400 or W400 Series Wall and Partition Designs in the UL Fire Resistance Directory and shall include the following construction features:
   A. Studs — Wall framing may consist of either wood studs or channel shaped steel studs. Wood studs to consist of nom 2 by 4 in. (51 by 102 mm) lumber spaced max 16 in. (406 mm) OC. Steel studs to be min 3-1/2 in. (89 mm) wide and spaced max 24 in. (610 mm) OC.
   B. Gypsum Board* — 5/8 in. (16 mm) thick with square or tapered edges. The gypsum board type, thickness, number of layers, fastener type and sheet orientation shall be as specified in the individual U300, U400 or V400 Wall and Partition Design. If the through penetrants are installed in a wood stud/gypsum board assembly, the max area of square, rectangular, or circular opening is 210 sq in. (1355 cm2). with max dimension of 14-1/2 in. (368 mm). If the through penetrants are installed in a steel stud/gypsum board assembly, max area of square, rectangular, or circular opening is 240 sq in. (1548 cm2) with max dimension of 20 in. (508 mm) wide.
   The hourly F and FH Ratings of the firestop system are equal to the hourly fire rating of the wall assembly in which it is installed.

Reproduced by HILTI, Inc. Courtesy of Underwriters Laboratories, Inc.
January 28, 2015

Customer Hotline: Hong Kong 8228 8118, Macau 00800 8228 8118 Email: hksales@hilti.com

System No. W-L-8079

2. Through-Penetrant — One or more pipes, conduit or tubes to be installed within the opening. The total number of through-penetrants is dependent on the size of the opening and the types and sizes of the penetrants. Any combination of the penetrants described below may be used provided that the following parameters relative to the annular spaces and the spacing between the through penetrants are maintained. The separation between the penetrants shall be min 1 in. (25 mm) to max 22 in. (560mm). The annular space between penetrants and the periphery of opening shall be min 0 in. (0 mm, point contact) to max 22 in. (560 mm). Pipes, conduit or tubes to be rigidly supported on both sides of wall assembly. The following types and sizes of pipes, conduit or tubes may be used.
   A. Copper Tubing — Nom 3 in. (76 mm) diam (or smaller) Type L (or heavier) copper tube.
   B. Copper Pipe — Nom 3 in. (76 mm) diam (or smaller) Regular (or heavier) copper pipe.
   C. Steel Pipe — Nom 4 in. (102 mm) diam (or smaller) Schedule 10 (or heavier) steel pipe.
   D. Iron Pipe — Nom 4 in. (102 mm) diam (or smaller) cast or ductile iron pipe.
   E. Conduit — Nom 3 in. (76 mm) diam (or smaller) electric metallic tubing (EMT) or rigid steel conduit.
   F. Polyvinyl Chloride (PVC) Pipe — Nom 2 in. (51 mm) diam (or smaller) Schedule 40 cellular or solid core PVC pipe for use in closed (process or supply) or vented (drain, waste, or vent) piping systems.
   G. Chlorinated Polyvinyl Chloride (CPVC) Pipe — Nom 2 in. (51 mm) diam (or smaller) SDR 13.5 CPVC pipe for use in closed (process or supply) piping systems.
   The T, FT and FTH Ratings are 0 Hr if bare pipe and tubing is used.
3. Pipe Insulation — One or more metallic penetrants (pipe or tubing) may be insulated with the following types of pipe coverings:
   A. Pipe Covering* — Min 1 in. (25 mm) to max 2 in. (51 mm) thick hollow cylindrical heavy density min 3.5 pcf (56 kg/m3) glass fiber units jacketed on the outside with an all service jacket. Longitudinal joints sealed with metal fasteners or factory-applied self-sealing lap tape. Transverse joints secured with metal fasteners or with butt tape supplied with the product.
   See Pipe and Equipment Covering - Materials (BRGU) category in the Building Materials Directory for names of manufacturers. Any pipe covering material meeting the above specifications and bearing the UL Classification Marking with a Flame Spread Index of 25 or less and a Smoke Developed Index of 50 or less may be used.
   B. Tube Insulation-Plastics+ — Min 1/2 in. (13 mm) to max 3/4 in. (19 mm) thick acrylonitrile butadiene/polyvinyl chloride (AB/PVC) flexible foam furnished in the form of tubing.
   See Plastics+ (QMFZ2) category in the Plastics Recognized Component Directory for names of manufacturers. Any Recognized Component tube insulation material meeting the above specifications and having a UL 94 Flammability Classification of 94-5VA may be used.
   The annular space between the insulated penetrants and the periphery of the opening shall be min 0 in. (0 mm, point contact) The separation between the insulated penetrants and the other penetrants shall be a min 1 in. (25 mm).
   The T, FT and FTH Ratings are 1-1/2 hour if Item 3B is used. The T, FT and FTH Ratings are 2 hr if Item 3A is used.

Reproduced by HILTI, Inc. Courtesy of
Underwriters Laboratories, Inc.
January 28, 2015

System No. W-L-8079

4. Cables — One max 3 in. (76 mm) diam bundle of cables installed within the opening and rigidly supported on both surfaces of wall. The annular space between the tightly-bundled cables and the periphery of the opening shall be min 0 in. (0 mm, point contact) to max 22 in. (560 mm). The separation between the cable bundle and the other penetrants shall be min 1 in. (25 mm) to max 22 in. (560 mm). Any combination of the following types and sizes of cables may be used:

A. Max 25 pair No. 24 AWG telephone cable with polyvinyl chloride (PVC) insulation and jacket.

B. Max 7/C No. 12 AWG copper conductor power and control cable with PVC or cross-linked polyethylene (XLPE) insulation and PVC jacket.

C. Multiple fiber optical communication cable jacketed with PVC and having a max outside diam of 1/2 in. (13 mm).

D. Max 3/C No. 8 AWG with bare aluminum ground, PVC insulated steel Metal-Clad+ Cable currently Classified under the Through Penetrating Product* (XHLY) category.

E. Max 3/C (with ground) No. 8 AWG (or smaller) nonmetallic sheathed (Romex) cable with PVC insulation and jacket materials.

F RG/U coaxial cable with polyethylene (PE) insulation and polyvinyl chloride (PVC) jacket having a max outside diam of 1/2 in. (13 mm).

G Max 3/4 in. (19 mm) diam copper ground cable with or without PVC jacket.

H Max 1-1/4in. (32 mm) Diam single or multi conductor mineral-insulated copper-clad cable.

The T, FT and FTH Ratings are 1/4 hr if cables D, G and H are used. The T, FT and FTH Ratings are 3/4 Hr for any other combination.

4A. Through Penetrants — (Not shown) - Max six nom 1 in. (25 mm) diam (or smaller) flexible steel conduits to be installed either concentrically or eccentrically within the firestop system. The annular space between the conduits and the periphery of the opening shall be min 0 in. (point contact) to a max 3 in. (76 mm). Conduits to be rigidly supported on both sides of wall.

4B. Through Penetrants — (Not Shown) - Max twelve nom 3/8 in. (10 mm) diam (or smaller) polyvinyl chloride (PVC) pneumatic tubing for use in closed (process or supply) piping systems. Tubing to be installed either concentrically or eccentrically within the firestop system. The annular space between the tubing and the periphery of the opening shall be min 0 in. (point contact) to a max 1 in. (25 mm). Tubing to be rigidly supported on both sides of wall.

5 Firestop System — The firestop system shall consist of the following:

A. Packing Material — In 2 hr fire rated wall assemblies, min 4-3/4 in. (121 mm) thickness of min 4 pcf (64 kg/m3) mineral wool batt insulation firmly packed into opening as a permanent form. In 1 hr fire rated wall assemblies, min 3-1/2 in. (89 mm) thickness of min 4 pcf (64 kg/m3) mineral wool batt insulation firmly packed into opening as a permanent form. Packing material recessed from both surfaces of the wall to accommodate the required thickness of fill material.

A1. Packing Material — Min 1-1/4 in. (32 mm) thickness of min 4 pcf (64 kg/m3) mineral wool batt insulation firmly packed as a backer around the perimeter of opening as a permanent form.

B. Fill, Void or Cavity Material* — Sealant — Min 5/8 in. (16 mm) thickness of fill material applied within annulus, flush with both surfaces of wall. At the point contact location between through penetrants and gypsum board, a min 1/2 in. (13 mm) diam bead of fill material shall be applied at the gypsum board/through penetrant interface on both surfaces of wall.

HILTI CONSTRUCTION CHEMICALS, DIV OF HILTI INC — FS-ONE Sealant or FS-ONE MAX Intumescent Sealant

* Indicates such products shall bear the UL or cUL Certification Mark for jurisdictions employing the UL or cUL Certification (such as Canada), respectively.

+ Bearing the UL Listing Mark

Bearing the UL Recognized Component Mark

Reproduced by HILTI, Inc. Courtesy of
Underwriters Laboratories, Inc.
January 28, 2015

Wall Opening Protective Materials (CLIV, CLIV7)

Classified by
Underwriters Laboratories, Inc.
to UL 263 and CAN/ULC-S101

CP 617 or CFS-P PA Firestop Putty Pads, for use with flush device UL Listed Metallic Outlet Boxes installed with steel mud rings or UL Listed Nonmetallic Outlet Boxes in framed wall assemblies as specified below. When protective material is used on outlet boxes on both sides of the wall as directed, the horizontal separation between outlet boxes on opposite sides of the wall may be less than 24 in. provided that the boxes are not installed back-to-back (unless otherwise indicated). Installation shall comply with the National Electrical Code (NFPA 70). Min 1/8 in. thick (CP 617) or min 0.2 in. (CFS-P PA) thick moldable putty pads are to be installed to completely cover the exterior surfaces of the outlet box (except for the side of the outlet box against the stud) and conduit fittings/connectors and to completely seal against the stud and gypsum board in the wall cavity unless otherwise noted below. When CFS-P PA is used, the putty pads may be installed with the release liner intact on the outside of the pad with the exception of any overlaps, in which case the liner is to be removed from the bottom layer at the overlap location. The box composition, max device dimensions, hourly rating, type of stud and type of faceplate are specified below.

CP 617 or CFS-P PA Firestop Putty Pads, for use with max 4 by 4 by max 2-1/8 in. flush device UL Listed Metallic Outlet Boxes installed with steel cover plates in 1 and 2 hr. fire rated gypsum wallboard wall assemblies framed with min 3-1/2 in. deep wood or steel studs and constructed as specified in the individual U300, U400 or V400 Series Wall and Partition Designs in the Fire Resistance Directory.

CP 617 or CFS-P PA Firestop Putty Pads, for use with max 4-11/16 by 4-11/16 by max 2-1/8 in., or max 4-3/8 by 4-7/8 by max 2-1/8 in., flush device UL Listed Metallic Outlet Boxes installed with steel cover plates for use in 1 hr fire rated V446 gypsum board/steel stud or U341 gypsum board/wood stud Wall and Partition Design No. in the Fire Resistance Directory. When U341 wall design is used, wall shall be sheathed with 5/8 in. gypsum board, and glass or mineral fiber batt insulation shall be installed in stud cavities in accordance with U341 design. Boxes may be installed back-to-back.

CP 617 or CFS-P PA Firestop Putty Pads, for use with max 4-11/16 by 4-11/16 by max 2-1/8 in. flush device UL Listed Metallic Outlet Boxes installed with steel cover plates for use in 1 and 2 hr fire rated gypsum board wall assemblies framed with min 3-1/2 in. deep wood or steel studs and constructed of the materials and in the manner specified in the individual U300, U400 or V400 Series Wall and Partition Designs in the Fire Resistance Directory. Min 0.8 pcf density fiberglass batt insulation is to be installed within the wall cavity required for 1 hr fire rated gypsum board wall assemblies and optional in 2 hr fire rated gypsum wallboard assemblies.

CP 617 or CFS-P PA Firestop Putty Pads, for use with max 4 by 3-3/4 by 3 in. deep UL Listed Nonmetallic Outlet Boxes manufactured by Carlon Electrical Products, made from polyvinyl chloride, and bearing a 2 hr rating under the "Outlet Boxes and Fittings Classification for Fire Resistance" category in the Fire Resistance Directory. Putty pads and boxes for use in 1 and 2 hr fire rated gypsum wallboard assemblies, framed with min 3-1/2 in. deep wood studs and constructed as specified in the individual U300 Series Wall and Partition Designs in the Fire Resistance Directory. Outlet box secured to wood stud by means of two nailing tabs supplied with the outlet box. Putty pads shall lap min 1/2 in. onto the stud and gypsum board within the stud cavity. Outlet boxes installed with steel or plastic cover plates.

CP 617 or CFS-P PA Firestop Putty Pads, for use with max 4 by 4 by 2-7/8 in. deep UL Listed Nonmetallic Outlet Boxes manufactured by Carlon Electrical Products, made from polyvinyl chloride, and bearing a 2 hr rating under the "Outlet Boxes and Fittings Classification for Fire Resistance" category in the Fire Resistance Directory. Putty pads and boxes for use in the 1 hr fire rated V446 gypsum board/steel stud or U341 gypsum board/wood stud Wall and Partition Design in the Fire Resistance Directory. When U341 wall design is used, wall shall be sheathed with 5/8 in. gypsum board, and glass or mineral fiber batt insulation shall be installed in stud cavities in accordance with U341 design. Outlet box secured to steel stud by means of fastening tab supplied with the outlet box. Putty pads shall lap min 1/2 in. onto the stud and gypsum board within the stud cavity. Outlet boxes installed with steel or plastic cover plates. Boxes may be installed back to back.

CP 617 Firestop Putty Pads, for use with max 2-1/4 by 3-3/4 by 2-3/4 in. deep UL Listed Nonmetallic Outlet Boxes manufactured by Pass and Seymore, Inc., and bearing a 2 hr rating under the "Outlet Boxes and Fittings Classification for Fire Resistance" category in the Fire Resistance Directory. Putty pads and boxes for use in 1 and 2 hr fire rated gypsum wallboard assemblies, framed with min 3-1/2 in. deep wood studs and constructed as specified in the individual U300 Series Wall and Partition Designs in the Fire Resistance Directory. Outlet box secured to wood stud by means of two nailing tabs supplied with the outlet box.Putty pads shall lap min 1/2 in. onto the stud and gypsum board within the stud cavity. Outlet boxes installed with steel or plastic cover plates.

Reproduced by HILTI, Inc. Courtesy of
Underwriters Laboratories, Inc.
October 29, 2013

Wall Opening Protective Materials (CLIV)

CP 617 or CFS-P PA Firestop Putty Pads, for use with max 4 by 3-3/4 by 3 in. deep UL Listed Nonmetallic Outlet Boxes manufactured by Allied Molded Products, Inc., made from fiber reinforced thermoplastic and bearing a 2 hr rating under the "Outlet Boxes and Fittings Classification for Fire Resistance" category in the Fire Resistance Directory. Putty pads and boxes for use in 1 hr fire rated gypsum wallboard assemblies, framed with min 3-1/2 in. deep wood studs and constructed as specified in the individual U300 Series Wall and Partition Designs in the Fire Resistance Directory. Outlet box secured to wood stud by means of two nailing tabs supplied with the outlet box. Putty pads shall lap min 1/2 in. onto the stud and gypsum board within the stud cavity. Outlet boxes installed with plastic cover plates.

CP 617 or CFS-P PA Firestop Putty Pads, for use with max 4 by 4 in. by 1-½ in. deep flush device UL Listed Metallic Outlet Boxes installed with steel cover plates in 1 hr. fire rated gypsum wallboard wall assemblies framed with min 3-1/2 in. deep wood or steel studs and constructed as specified in the individual U300, U400 or V400 Series Wall and Partition Designs in the Fire Resistance Directory. The boxes are installed back to back with 5 in. by 4 in. UL Classified fire block, FS 657, CP 657 or CFS-BL Firestop Block installed in the cavity between the two boxes .

CP 617 or CFS-P PA Firestop Putty Pads, for use with max 14 by 4 by max 2-1/2 in. flush device UL Listed Metallic Outlet Boxes installed with steel cover plates in 1 and 2 hr. fire rated gypsum board wall assemblies framed with min 5-1/2 in. deep wood or steel studs for 2 hr fire rated walls and min 3-1/2 in. deep wood or steel studs for 1 hr fire rated walls. Walls constructed as specified in the individual U300, U400 or V400 Series Wall and Partition Designs in the Fire Resistance Directory. Stud cavity insulation is required and shall consist of min 5-1/2 in. (2 hr rated walls) or min 3-1/2 in. (1 hr rated walls) thick fiberglass (min 0.8 pcf) or mineral fiber (min 4 pcf). Putty pads shall lap min 1/2 in. onto the stud and gypsum board within the stud cavity. When boxes are interconnected by means of electrical metallic tube (EMT) or conduit, a ball of putty pad material shall be used to completely plug the open end of each EMT or conduit within the box.

CP 617 or CFS-P PA Firestop Putty Pads, for use with max 4-11/16 by 4-11/16 by max 2-1/8 in. flush device UL Listed Metallic Outlet Boxes installed with steel or plastic cover plates for use in 1 and 2 hr fire rated gypsum board wall assemblies framed with min 5-1/2 in. deep steel studs and constructed of the materials and in the manner specified in the individual U400 or V400 Series Wall and Partition Designs in the Fire Resistance Directory. Putty pads shall lap min 1/2 in. onto the stud and gypsum board within the stud cavity. When boxes are interconnected by means of electrical metallic tube (EMT) or conduit, a ball of putty pad material shall be used to completely plug the open end of each EMT or conduit within the outlet boxes. Metallic outlet boxes may be provided with steel attachment brackets which offset box min 1/4 in. from stud. When steel attachment brackets are used, putty pad to be affixed to the back and all four sides of the box.

CFS-P PA Moldable Putty Pads, for use with max 4-11/16 by 4-11/16 in. by max 2-1/8 in. flush device UL Listed Metallic Outlet Boxes installed with steel cover plates in 2 hr fire rated gypsum board wall assemblies framed with min 3-1/2 in. deep steel studs and constructed of the materials and in the manner specified in the individual U400 and V400 Series Wall and Partition Designs in the Fire Resistance Directory. An additional 3/4 in. ball of putty pad material shall be used to plug the end of each electrical metallic tube or conduit at its connection to the box.

CFS-P PA Moldable Putty Pads, for use with max 4 by 4 by 2-1/8 in. flush device UL Listed Metallic Outlet Boxes installed with steel or plastic cover plates in 2 hr fire rated gypsum board wall assemblies framed with min 3-1/2 in. deep steel studs and constructed of the materials and in the manner specified in the individual U400 and V400 Series Wall and Partition Designs in the Fire Resistance Directory. An additional 3/4 in. ball of putty pad material shall be used to plug the end of each electrical metallic tube or conduit at its connection to the box.

CFS-P PA Moldable Putty Pads, for use with max 14-1/4 by 4-1/2 by 2-1/2 in. flush device UL Listed Metallic Outlet Boxes installed with steel cover plates in 2 hr fire rated gypsum board wall assemblies framed with min 3-1/2 in. deep steel studs and constructed of the materials and in the manner specified in the individual U400 and V400 Series Wall and Partition Designs in the Fire Resistance Directory. An additional 3/4 in. ball of putty pad material shall be used to plug the end of each electrical metallic tube or conduit at its connection to the box.

CP 617 or CFS-P PA Firestop Putty Pads and HILTI Firestop Box Inserts, for use with maximum 4 by 4 by 1-1/2 in. (102 by 102 by 38 mm) deep flush device UL Listed Metallic Outlet Boxes installed with steel mud rings and with steel or plastic faceplates in 1 or 2 hr fire rated gypsum board wall assemblies constructed with min 3-1/2 in. (89 mm) wide wood or steel studs. When both protective materials are used with outlet boxes on both sides of the wall as directed, the boxes may be installed back-to-back provided that the backs of the boxes are minimum 1/2 in. (13 mm) apart and provided that the boxes are not interconnected. Adjoining pieces of moldable putty pads to be overlapped approx 1/2 in. (13 mm) at the seam. An insert pad shall be installed to completely cover the back inside surface of each outlet box.

Reproduced by HILTI, Inc. Courtesy of
Underwriters Laboratories, Inc.
October 29, 2013

Classified by
Underwriters Laboratories, Inc.
to UL 2079 and CAN/ULC-S115

System No. FF-D-1013

Assembly Rating - 2 Hr
Nominal Joint Width - 3-1/2 in.
Class II Movement Capabilities - 14% Compression or Extension

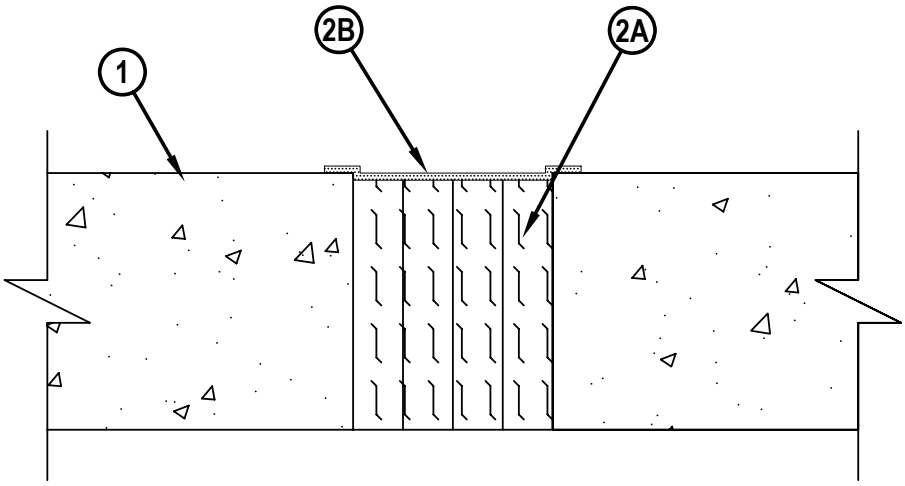

1. Floor Assembly — Min 4-1/2 in. (114 mm) thick reinforced lightweight or normal weight (100 - 150 pcf or 1600 - 2400 kg/m3) structural concrete.
2. Joint System — Max width of joint (at time of installation of joint system) is 3-1/2 in. (89 mm). The joint system is designed to accommodate a max 14 percent compression or extension from its installed width. The joint system shall consist of the following:
   A. Packing Material — Min 4 pcf (64 kg/m3) mineral wool batt insulation installed in joint opening as a permanent form. Pieces of batt cut to min width of 4-3/8 in. (111 mm) and installed edge-first into joint opening, parallel with joint direction, such that batt sections are compressed min 42 percent in thickness and that the compressed batt sections are recessed from top surface of the floor as required to accommodate the required thickness of fill material. Adjoining lengths of batt to be tigthly-butted with butted seams spaced min 24 in. (610 mm) apart along the length of the joint.
   B. Fill, Void or Cavity Material* — Sealant — Min 1/8 in. (3.2 mm) wet thickness of fill material applied within the joint, flush with top surface of floor and lapping a min 1/2 in. (13 mm) onto the top surface of the floor.
   HILTI CONSTRUCTION CHEMICALS, DIV OF HILTI INC — CP672 Firestop Spray or CFS-SP WB Firestop Joint Spray

*Bearing the UL Classification Mark

Hilti Firestop Systems

Reproduced by HILTI, Inc. Courtesy of
Underwriters Laboratories, Inc.
June 04, 2010

Classified by
Underwriters Laboratories, Inc.
to UL 2079 and CAN/ULC-S115

SYSTEM NO. FF-D-1047

ANSI/UL2079	CAN/ULC S115
Assembly Rating — 4 Hr	F Rating — 4 Hr
Nominal Joint Width - 2 In.	FT Rating — 4 Hr
Class II Movement Capabilities - 12.5% Compression or Extension	FH Rating — 4 Hr
	FTH Rating — 4Hr
	Nominal Joint Width - 2 In.
	Class II Movement Capabilities - 12.5% Compression or Extension

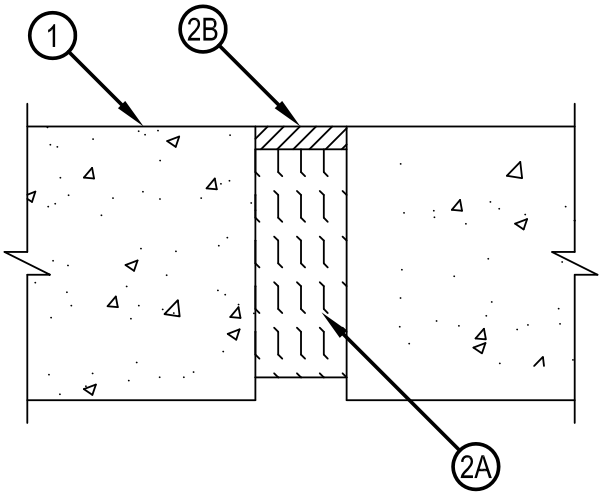

1. Floor Assembly — Min 6 in. thick reinforced lightweight or normal weight (100 - 150 pcf) structural concrete.
2. Joint System — Max width of joint (at time of installation of joint system) is 2 in. The joint system is designed to accommodate a max 12.5 percent compression or extension from its installed width. The joint system shall consist of the following:
   A. Forming Material — Min 4 pcf mineral wool batt insulation installed in joint opening as a permanent form. Pieces of batt cut to min width of 5 in. and installed edge-first into joint opening, parallel with joint direction, such that batt sections are compressed min 50 percent in thickness and that the compressed batt sections are recessed a min of 1/2 in. from top surface of the floor to accommodate the required thickness of fill material. Adjoining lengths of batt to be tightly-butted with butted seams spaced min 24 in. apart along the length of the joint.
   THERMAFIBER INC — Type SAF
   B. Fill, Void or Cavity Material* - Sealant — Min 1/2 in. thickness of fill material applied within the joint, flush with top surface of floor.
   HILTI CONSTRUCTION CHEMICALS, DIV OF HILTI INC — CP601S Elastomeric Firestop Sealant, CFS-S SIL GG or CFS-S SIL SL (floors only) Sealant

*Bearing the UL Classification Mark

Hilti Firestop Systems

Reproduced by HILTI, Inc. Courtesy of
Underwriters Laboratories, Inc.
December 26, 2013

Classified by
Underwriters Laboratories, Inc.
to UL 2079 and CAN/ULC-S115

System No. FF-D-1087

Assembly Rating — 2 Hr
Nominal Joint Width — 3 In.
Class II Movement Capabilities —17% Compression Or Extension
L Rating at Ambient — Less than 1 CFM/Lin Ft
L Rating at 400 F — Less than 1 CFM/Lin Ft

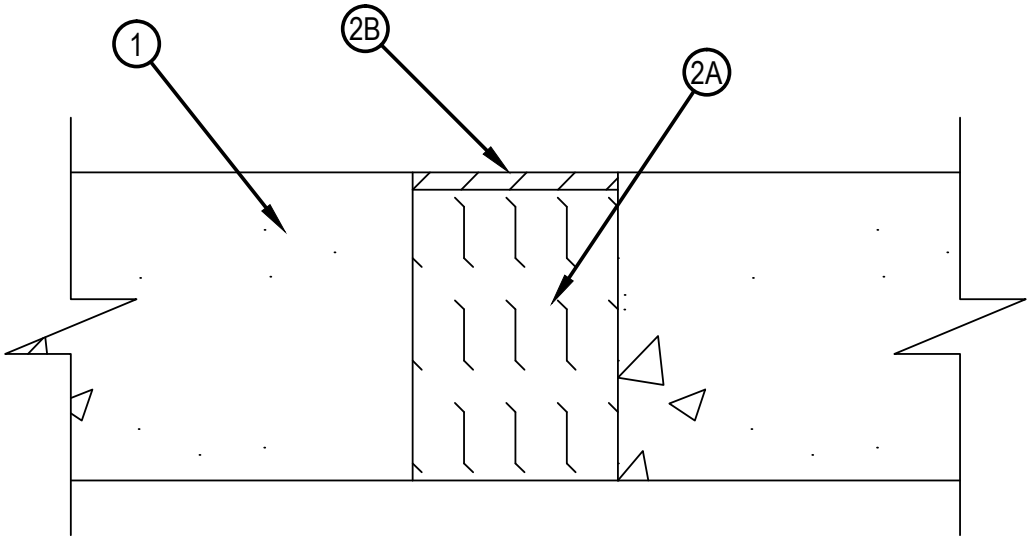

1. Floor Assembly — Min 4-1/2 in. (114 mm) thick reinforced lightweight or normal weight (100-150 pcf or 1600-2400 kg/m3) structural concrete.
2. Joint System — Max width of joint (at time of installation of joint system) is 3 in. (76 mm). The joint system is designed to accommodate a max 17 percent in compression or extension from its installed width. The joint system shall consist of the following:
   A. Forming Material — Min 4 pcf (64 kg/m3) mineral wool batt insulation installed in joint opening as a permanent form. Pieces of batt cut to min width of 4 in. (102 mm) and installed edge-first into joint opening, parallel with joint direction, such that batt sections are compressed min 40 percent in thickness and that the compressed batt sections are recessed from top surface of the floor as required to accommodate the required thickness of fill material. Adjoining lengths of batt to be tightly-butted with butted seams spaced min 24 in. (610 mm) apart along the length of joint.
   FIBREX INSULATIONS INC — FBX Safing Insulation
   B. Fill, Void or Cavity Material* — Sealant — Min 1/4 in. (6 mm) thickness of fill material applied within the joint, flush with top surface of floor.
   HILTI CONSTRUCTION CHEMICALS, DIV OF HILTI INC — CP606 Flexible Firestop Sealant

*Bearing the UL Classification Mark

Hilti Firestop Systems

Reproduced by HILTI, Inc. Courtesy of
Underwriters Laboratories, Inc.
July 13, 2009

Classified by
Underwriters Laboratories, Inc.
to UL 2079 and CAN/ULC-S115

System No. FW-D-1013

Assembly Rating - 2 Hr
Nominal Joint Width - 3-1/2 in.
Class II Movement Capabilities - 14% Compression or Extension

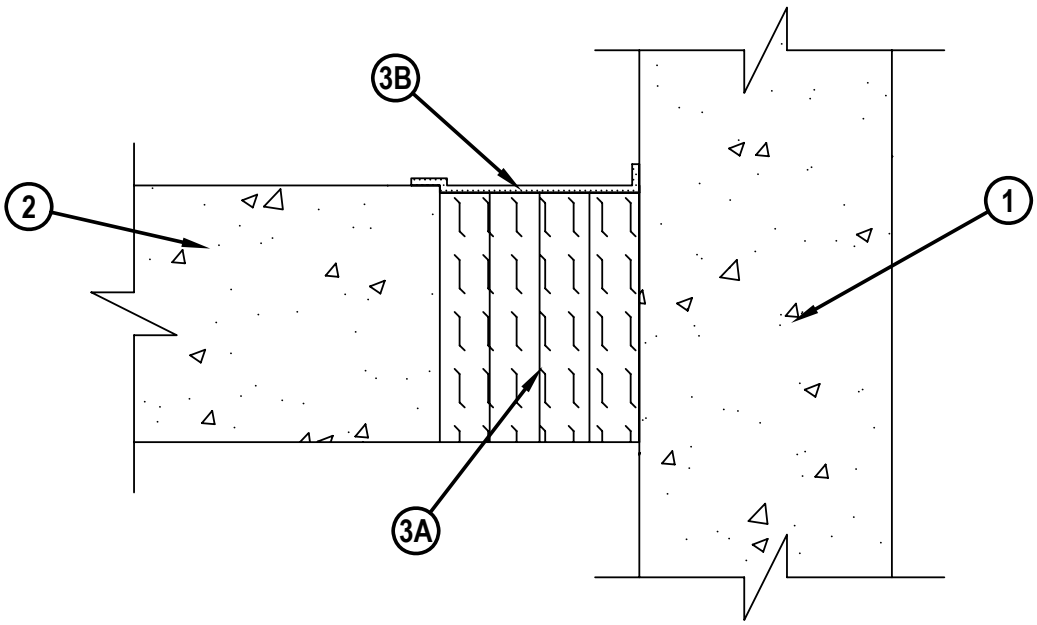

1. Wall Assembly — Min 4-1/2 in. (114 mm) thick reinforced lightweight or normal weight (100-150 pcf or 1600-2400 kg/m3) structural concrete. Wall may also be constructed of any UL Classified Concrete Blocks*.
   See Concrete Blocks (CAZT) category in the Fire Resistance Directory for names of manufacturers.
2. Floor Assembly — Min 4-1/2 in. (114 mm) thick reinforced lightweight or normal weight (100 - 150 pcf or 1600-2400 kg/m3) structural concrete.
3. Joint System — Max separation between edge of floor and face of wall (at time of installation of joint system) is 3-1/2 in. (89 mm). The joint system is designed to accommodate a max 14 percent compression or extension from its installed width. The joint system shall consist of the following:
   A. Packing Material — Min 4 pcf (64 kg/m3) mineral wool batt insulation installed in joint opening as a permanent form. Pieces of batt cut to min width of 4-3/8 in. (117 mm) and installed edge-first into joint opening, parallel with joint direction, such that batt sections are compressed min 42 percent in thickness and that the compressed batt sections are recessed from top surface of the floor as required to accommodate the required thickness of fill material. Adjoining lengths of batt to be tightly-butted with butted seams spaced min 24 in. (610 mm) apart along the length of the joint.
   B. Fill, Void or Cavity Material* — Sealant — Min 1/8 in. (3.2 mm) wet thickness of fill material applied within the joint, flush with top surface of floor and lapping a min 1/2 in. (13 mm) onto the top surface of the floor and edge of the wall.
   HILTI CONSTRUCTION CHEMICALS, DIV OF HILTI INC — CP672 Firestop Spray or CFS-SP WB Firestop Joint Spray

*Bearing the UL Classification Mark

Hilti Firestop Systems

Reproduced by HILTI, Inc. Courtesy of
Underwriters Laboratories, Inc.
June 04, 2010

Classified by
Underwriters Laboratories, Inc.
to UL 2079 and CAN/ULC-S115

System No. FW-D-1047

Assembly Rating - 4 Hr
Nominal Joint Width - 2 In.
Class II Movement Capabilities - 12.5% Compression or Extension

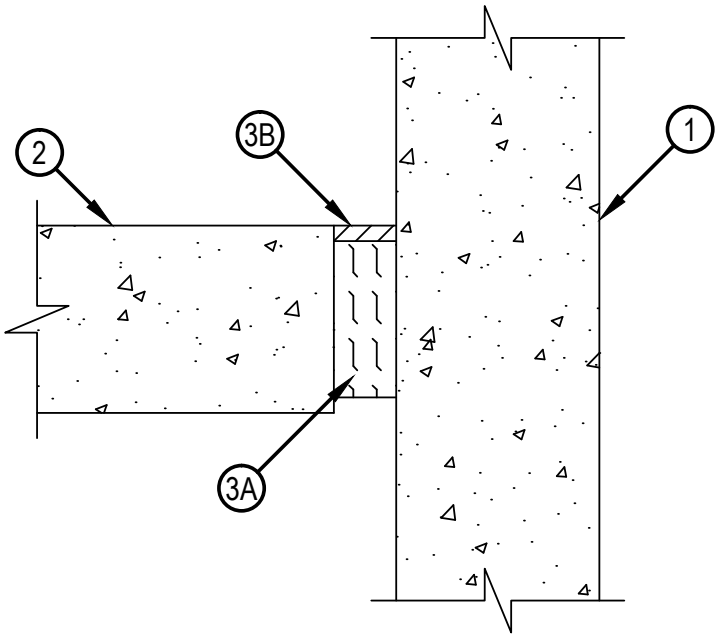

1. Wall Assembly — Min 6 in. thick reinforced lightweight or normal weight (100-150 pcf) structural concrete. Wall may also be constructed of any UL Classified Concrete Blocks*.
   See Concrete Blocks (CAZT) category in the Fire Resistance Directory for names of manufacturers.
2. Floor Assembly — Min 6 in. thick reinforced lightweight or normal weight (100 - 150 pcf) structural concrete.
3. Joint System — Max separation between edge of floor and face of wall (at time of installation of joint system) is 2 in. The joint system is designed to accommodate a max 12.5 percent compression or extension from its installed width. The joint system shall consist of the following:
   A. Forming Material — Min 4 pcf mineral wool batt insulation installed in joint opening as a permanent form. Pieces of batt cut to min width of 5 in. and installed edge-first into joint opening, parallel with joint direction, such that batt sections are compressed min 50 percent in thickness and that the compressed batt sections are recessed a min 1/2 in. from top surface of the floor as required to accommodate the required thickness of fill material. Adjoining lengths of batt to be tightly-butted with butted seams spaced min 24 in. apart along the length of the joint. THERMAFIBER INC — Type SAF
   B. Fill, Void or Cavity Material* - Sealant — Min 1/2 in. thickness of fill material applied within the joint, flush with top surface of floor. HILTI CONSTRUCTION CHEMICALS, DIV OF HILTI INC — CP601S Elastomeric Firestop Sealant, CFS-S SIL GG or CFS-S SIL SL Sealant.

*Bearing the UL Classification Mark

Hilti Firestop Systems

Reproduced by HILTI, Inc. Courtesy of
Underwriters Laboratories, Inc.
February 14, 2014

Classified by
Underwriters Laboratories, Inc.
to UL 2079 and CAN/ULC-S115

System No. FW-D-1071

Assembly Rating — 2 Hr
Nominal Joint Width — 3 In.
Class II Movement Capabilities —17% Compression Or Extension
L Rating at Ambient — Less than 1 CFM/Lin Ft
L Rating at 400 F — Less than 1 CFM/Lin Ft

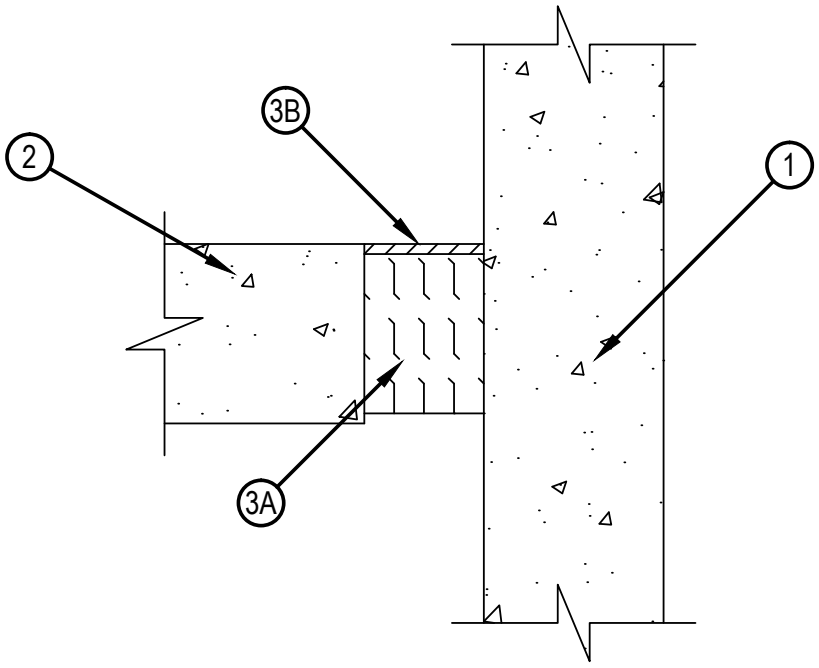

1. Wall Assembly — Min 4-1/2 in. (114 mm) thick reinforced lightweight or normal weight (100-150 pcf or 1600-2400 kg/m3) structural concrete. Wall may also be constructed of any UL Classified Concrete Blocks*.
   See Concrete Blocks (CAZT) category in the Fire Resistance Directory for names of manufacturers.
2. Floor Assembly — Min 4-1/2 in. (114 mm) thick reinforced lightweight or normal weight (100-150 pcf or 1600-2400 kg/m3) structural concrete.
3. Joint System — Max separation between edge of floor and face of wall (at time of installation of joint system) is 3 in. (76 mm) . The joint system is designed to accommodate a max 17 percent in compression or extension from its installed width. The joint system shall consist of the following:
   A. Forming Material — Min 4 pcf (64 kg/m3) mineral wool batt insulation installed in joint opening as a permanent form. Pieces of batt cut to min width of 4 in. (102 mm) and installed edge-first into joint opening, parallel with joint direction, such that batt sections are compressed min 40 percent in thickness and that the compressed batt sections are recessed from top surface of the floor as required to accommodate the required thickness of fill material. Adjoining lengths of batt to be tightly-butted with butted seams spaced min 24 in. (610 mm) apart along the length of the joint.
   FIBREX INSULATIONS INC — FBX Safing Insulation
   B. Fill, Void or Cavity Material* — Sealant — Min 1/4 in. (6 mm) thickness of fill material applied within the joint, flush with top surface of floor.
   HILTI CONSTRUCTION CHEMICALS, DIV OF HILTI INC — CP606 Flexible Firestop Sealant

*Bearing the UL Classification Mark

Reproduced by HILTI, Inc. Courtesy of
Underwriters Laboratories, Inc.
July 13, 2009

Classified by
Underwriters Laboratories, Inc.
to UL 2079 and CAN/ULC-S115

System No. HW-D-0081

Assembly Rating - 2 Hr
Nominal Joint Width - 3/4 in.
Class II Movement Capabilities - 33% Compression or Extension

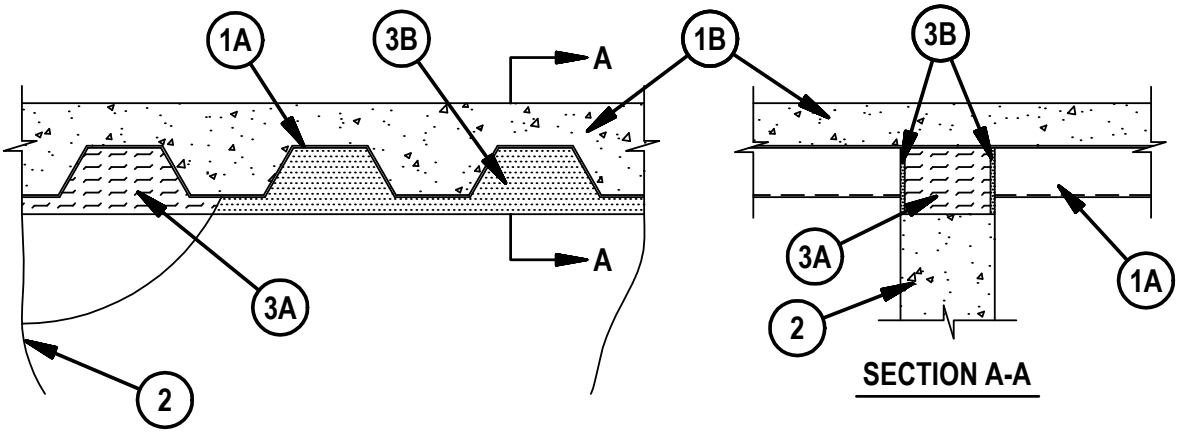

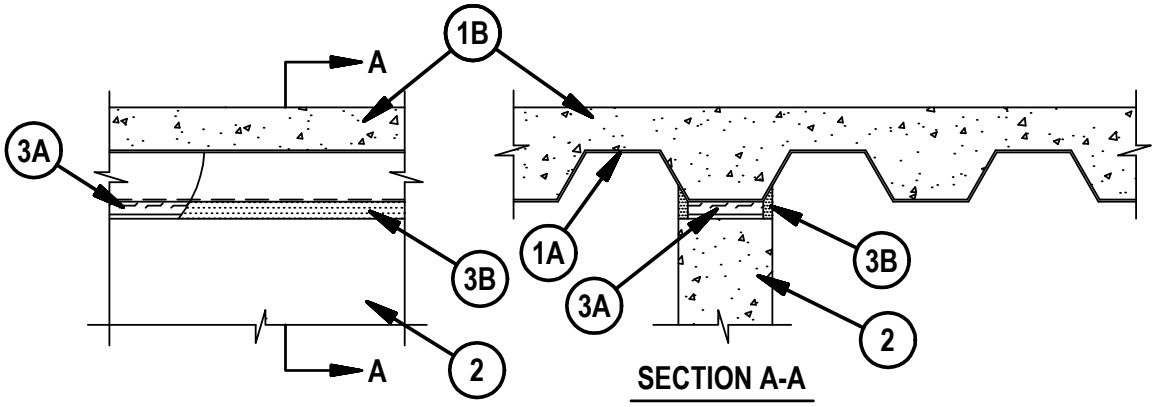

1. Floor Assembly — The fire-rated fluted steel floor unit/concrete floor assembly shall be constructed of the materials and in the manner described in the individual D700 or D900 Floor-Ceiling Design in the Fire Resistance Directory and shall include the following construction features:
   A. Steel Floor and Form Units* — Max 3 in. deep galv steel fluted floor units.
   B. Concrete — Min 2-1/2 in. thick reinforced concrete, as measured from the top plane of the floor units.

1A. Roof Assembly — (Not Shown) — As an alternate to the floor assembly, a fire rated fluted steel deck roof assembly may be used. The roof assembly shall be constructed of the materials and in the manner described in the individual P900 Series Roof-Ceiling Design in the UL Fire Resistance Directory. The hourly rating of the roof assembly shall be equal to or greater than the hourly rating of the wall assembly. The roof assembly shall include the following construction features:
   A. Steel Roof Deck — Max 3 in. deep galv steel fluted roof deck.
   B. Roof Insulation — Min 2-1/4 in. thick poured insulating concrete, as measured from the top plane of the floor units.

2. Wall Assembly — Min 5 in. thick steel reinforced lightweight or normal weight (100-150 pcf) concrete. Wall may also be constructed of an UL Classified Concrete Blocks* .
   See Concrete Block (CAZT) category in the Fire Resistance Directory for names of manufacturers.

Reproduced by HILTI, Inc. Courtesy of
Underwriters Laboratories, Inc.
April 15, 2009

Classified by
Underwriters Laboratories, Inc.
to UL 2079 and CAN/ULC-S115

System No. HW-D-0081

Assembly Rating - 2 Hr
Nominal Joint Width - 3/4 in.
Class II Movement Capabilities - 33% Compression or Extension

3. Joint System — Max separation between bottom of floor or roof and top of wall is 3/4 in. The joint system is designed to accommodate a max 33 percent compression or extension from its installed width. The joint system consists of a packing material and a fill material between the top of the wall and the bottom of the floor or roof, as follows:

Configuration A

A. Forming Material — Min 4 in. thickness of 4 pcf density mineral wool batt insulation was cut to the shape of the fluted deck, approximately 20 percent larger than the area of the flutes and compressed into the flutes of the steel deck above the wall assembly. The forming material shall be recessed 1/2 in. from each side of the wall. Additional pieces of forming material, compressed min 50 percent in thickness and installed edge first into joint opening between bottom of steel deck and top of wall, parallel with joint direction. Compressed batt sections recessed 1/2 in. from both wall surfaces. Adjoining lengths of batt to be tightly butted with butted seams spaced min 48 in. apart along the length of the joint.
FIBREX INSULATIONS INC — FBX Safing Insulation

A1. Forming Material*—Plugs — (Optional-Not Shown) Performed mineral wool plugs, formed to the shape of the fluted deck, friction fit to completely fill the flutes. The plugs shall be recessed 1/2 in. from both wall surfaces. Additional forming material, described in Item 3A, to be used in conjunction with the plugs to fill the gap between the top of the wall and bottom of steel deck.
HILTI CONSTRUCTION CHEMICALS, DIV OF HILTI INC — CP777 Speed Plugs

B. Fill, Void or Cavity Material* - Sealant — Min 1/2 in. thickness of fill material installed on each side of the wall in the flutes of the steel deck and between the top of the wall and the bottom of the steel deck, flush with each surface of the wall.
HILTI CONSTRUCTION CHEMICALS, DIV OF HILTI INC — CP606 Flexible Firestop Sealant

Configuration B

A. Forming Material — Min 4 in. thickness of 4 pcf density mineral wool batt insulation compressed min 50 percent in thickness and installed edge first into joint opening between bottom of steel deck and top of wall, parallel with joint direction. Compressed batt sections recessed 1/2 in. from both wall surfaces. Adjoining lengths of batt to be tightly butted with butted seams spaced min 48 in. apart along the length of the joint.
FIBREX INSULATIONS INC — FBX Safing Insulation

B. Fill, Void or Cavity Material* - Sealant — Min 1/2 in. thickness of fill material installed on each side of the wall between the top of the wall and the bottom of the steel deck, flush with each surface of the wall.
HILTI CONSTRUCTION CHEMICALS, DIV OF HILTI INC — CP606 Flexible Firestop Sealant

*Bearing the UL Classification Mark

Reproduced by HILTI, Inc. Courtesy of
Underwriters Laboratories, Inc.
April 15, 2009

Classified by
Underwriters Laboratories, Inc.
to UL 2079 and CAN/ULC-S115

System No. HW-D-0181

Assembly Rating — 2 Hr
Nominal Joint Width— 1 in.
L Rating At Ambient — Less Than 1 CFM/Lin Ft
L Rating At 400°F — Less Than 1 CFM/Lin Ft
Class II and III Movement Capabilities— 12.5% Compression

HWD 0181

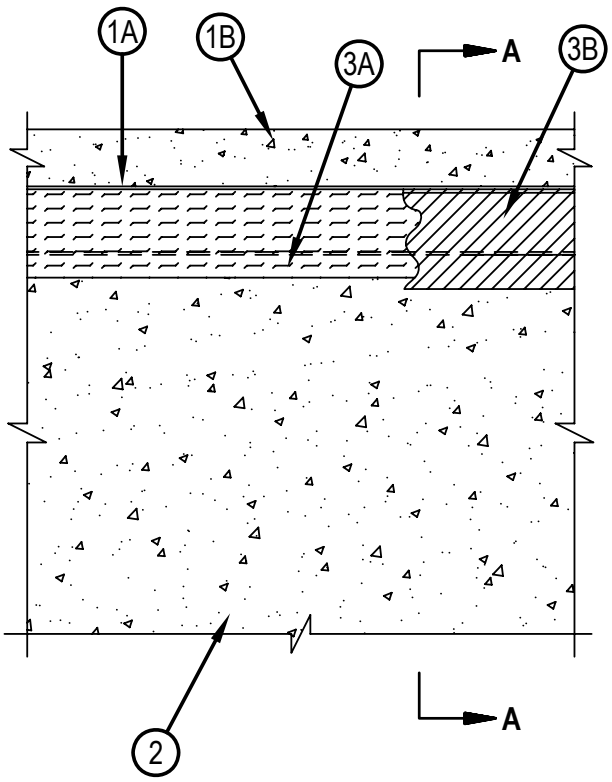

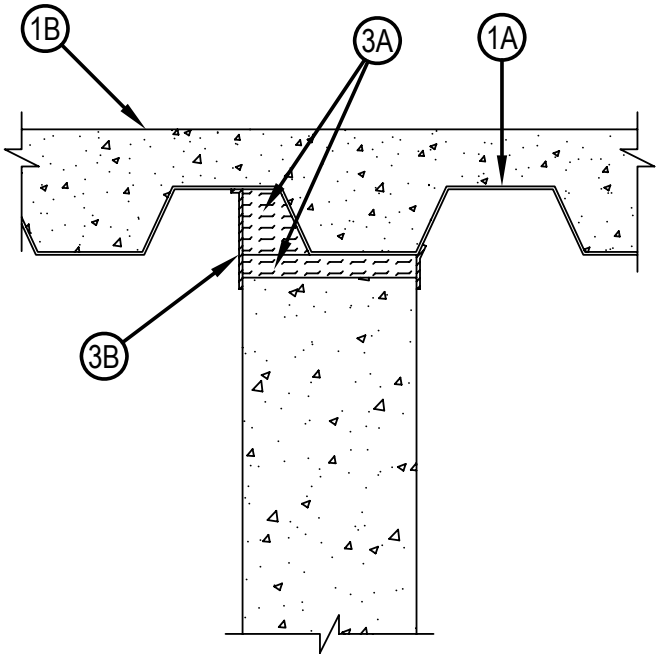

SECTION A-A

1. Floor Assembly — The 2 hr fire-rated fluted steel deck/concrete floor assembly shall be constructed of the materials and in the manner described in the individual D700 Floor-Ceilng Design in the UL Fire Resistance Directory and shall include the following construction features:
   A. Steel Floor And Form Units* — Max 3 in. (76 mm) deep galv steel fluted floor units.
   B. Concrete — Min 2-1/2 in. (64 mm) thick reinforced concrete, as measured from the top plane of the floor units.
   C. Spray-Applied Fire Resistive Materials* — (Optional)—(Not Shown)—Prior to the installation of the forming material and fill, void or cavity material (Item 3A, 3B) the steel floor units may be sprayed with a min 5/16 in. (8 mm) to max 1-3/4 in. (44 mm) thickness of fire resistive material in accordance with the specifications in the individual D700 Series Design.
   W R GRACE & CO - CONN — Type MK-6-HY
   ISOLATEK INTERNATIONAL — Type 300
2. Wall Assembly — Min 8 in. (203 mm) thick reinforced lightweight or normal weight (100-150 pcf or 1600-2400 kg/m3) structural concrete. Wall shall be installed parallel with the flutes of the steel floor and form units (Item 1A). Wall may also be constructed of any UL Classified 2 hr fire rated Concrete Blocks*. When wall is constructed of concrete blocks, the top course of block shall be filled with concrete, grout or mortar.
   See Concrete Blocks (CAZT) category in the Fire Resistance Directory for names of manufacturers.

Reproduced by HILTI, Inc. Courtesy of
Underwriters Laboratories, Inc.
June 04, 2010

Classified by
Underwriters Laboratories, Inc.
to UL 2079 and CAN/ULC-S115

System No. HW-D-0181

Assembly Rating — 2 Hr
Nominal Joint Width— 1 in.
L Rating At Ambient — Less Than 1 CFM/Lin Ft
L Rating At 400°F — Less Than 1 CFM/Lin Ft
Class II and III Movement Capabilities— 12.5% Compression

3. Joint System — Max separation between bottom of spray-applied fire resistive and top of the wall at time of installation of joint system is 1 in. (25 mm). The joint system is designed to accommodate a max 12.5 percent compression or extension from its installed width. The joint system consists of the following:

   A. Forming Material* — Min 4 pcf (64 kg/m3) mineral wool batt insulation cut into strips with a width approx equal to the overall thickness of the wall. Strips compressed 33 percent in thickness and inserted into the gap between the top of the wall and the bottom of the floor units. When the void beneath the protected steel deck is located entirely above the wall, the void shall be completely filled with mineral wool insulation compressed 33 percent in thickness. When void beneath the steel deck is located in part above the wall, that portion of the void above the wall shall be packed with additional strips of mineral wool batt insulation compressed 33 percent in thickness.
   ROCK WOOL MANUFACTURING CO — Delta Board

   B. Fill, Void or Cavity Material* — Min 1/8 in. (3.2 mm) wet thickness of fill material sprayed or troweled on each side of the wall to completely cover mineral wool forming material and to overlap a min of 1/2 in. (13 mm) onto wall and steel deck on both sides of wall. When spray-applied fire resistive material* is applied to the steel floor and form units, the fill material is to overlap the wall a min of 1/2 in. (13 mm) and to overlap the spray-applied fire resistive material a min of 2 in. (51 mm) on both sides of the wall.
   HILTI CONSTRUCTION CHEMICALS, DIV OF HILTI INC — CP672 Firestop Spray or CFS-SP WB Firestop Joint Spray

*Bearing the UL Classification Mark

Reproduced by HILTI, Inc. Courtesy of
Underwriters Laboratories, Inc.
June 04, 2010

Classified by
Underwriters Laboratories, Inc.
to UL 2079 and CAN/ULC-S115

System No. HW-D-0225

Assembly Rating - 2 Hr
Nominal Joint Width - 2-1/4 in.
Class II Movement Capabilities - 11% Compression or Extension

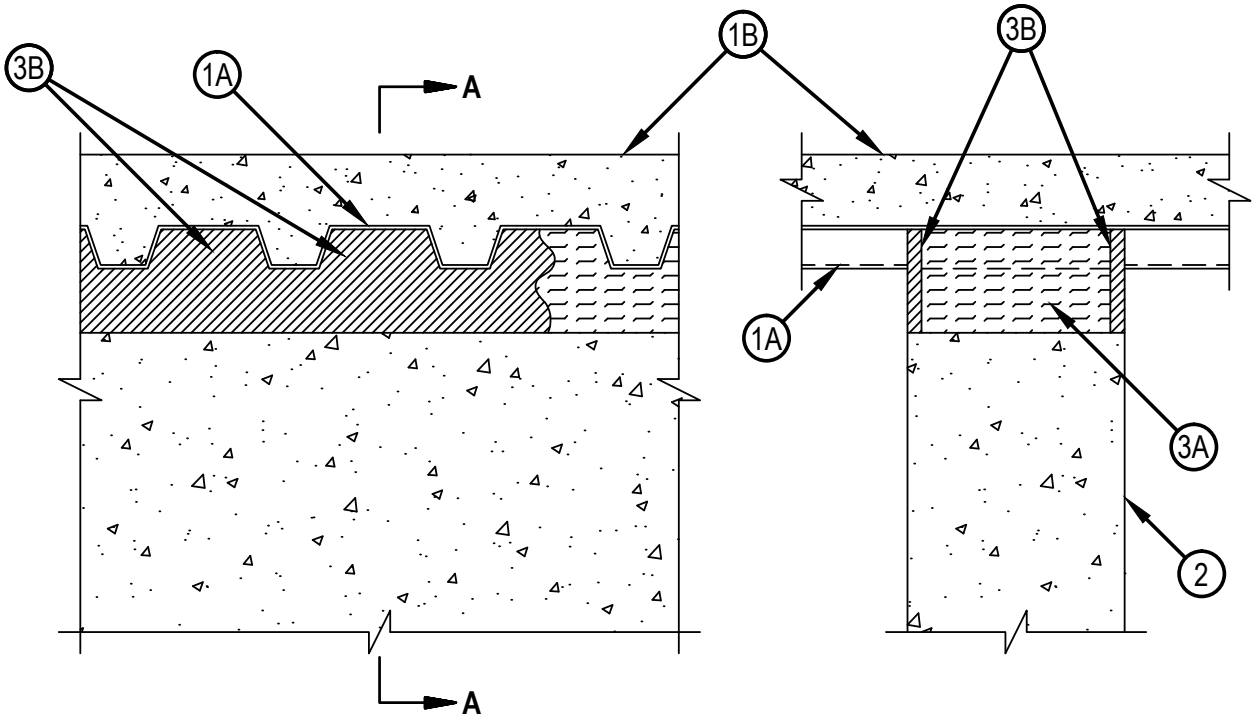

SECTION A-A

Hilti Firestop Systems

Reproduced by HILTI, Inc. Courtesy of
Underwriters Laboratories, Inc.
April 15, 2009

Classified by
Underwriters Laboratories, Inc.
to UL 2079 and CAN/ULC-S115

System No. HW-D-0225

Assembly Rating - 2 Hr
Nominal Joint Width - 2-1/4 in.
Class II Movement Capabilities - 11% Compression or Extension

1. Floor Assembly — The fire-rated fluted steel floor unit/concrete floor assembly shall be constructed of the materials and in the manner described in the individual D900 Series Floor-Ceiling Design in the Fire Resistance Directory and shall include the following construction features:
   A. Steel Floor and Form Units* — Max 3 in. deep galv steel fluted floor units.
   B. Concrete — Min 2-1/2 in. thick reinforced concrete, as measured from the top plane of the floor units.
2. Wall Assembly — Min 5 in. thick steel reinforced lightweight or normal weight (100-150 pcf) concrete. Wall may also be constructed of an UL Classified Concrete Blocks*.
   See Concrete Block (CAZT) category in the Fire Resistance Directory for names of manufactures.
3. Joint System — Max separation between valleys of fluted steel floor unit and top of wall is 2-1/4 in., providing separation at crests of floor unit does not exceed 3-3/4 in. The joint system is designed to accommodate a max 11 percent compression or extension from the nom installed joint width. The joint system consists of a packing material and a fill material between the top of the gypsum board and the bottom of the floor, as follows:
   A. Forming Material — Sections of min 4 pcf density mineral wool batt insulation inserted between top of wall and bottom of floor, compressed approx 20 percent in thickness beneath each valley. Additional pieces of mineral wool cut to the shape of the flute, stacked to a thickness approx 20 percent greater than the overall thickness of the opening and installed in the flutes above the wall. The forming material shall be recessed 1/2 in. from each side of the wall.
   FIBREX INSULATIONS INC — FBX Safing Insulation
   A1. Forming Material* — Plugs (Optional-Not Shown) Performed mineral wool plugs, formed to the shape of the fluted deck, friction fit to completely fill the flutes. The plugs shall be recessed 1/2 in. from both wall surfaces. Additional forming material, described in Item 3A, to be used in conjunction with the plugs to fill the gap between the top of the wall and bottom of steel deck.
   HILTI CONSTRUCTION CHEMICALS, DIV OF HILTI INC — CP777 Speed Plugs
   B. Fill, Void or Cavity Material* — Sealant Min ½ in. thickness of fill material installed on each side of the wall in the flutes of the steel floor units and between the top of the wall and the bottom of the steel floor units, flush with each surface of the wall.
   HILTI CONSTRUCTION CHEMICALS, DIV OF HILTI INC — CP606 Flexible Firestop Sealant

*Bearing the UL Classification Mark

Reproduced by HILTI, Inc. Courtesy of
Underwriters Laboratories, Inc.
April 15, 2009

Classified by
Underwriters Laboratories, Inc.
to UL 2079 and CAN/ULC-S115

System No. HW-D-0268

Assembly Rating - 3 Hr
Nominal Joint Width - 1 in.
L Rating At Ambient — Less Than 1 CFM/Lin Ft
L Rating At 400°F — Less Than 1 CFM/Lin Ft
Class II Movement Capabilities - 12.5% Compression and Extension

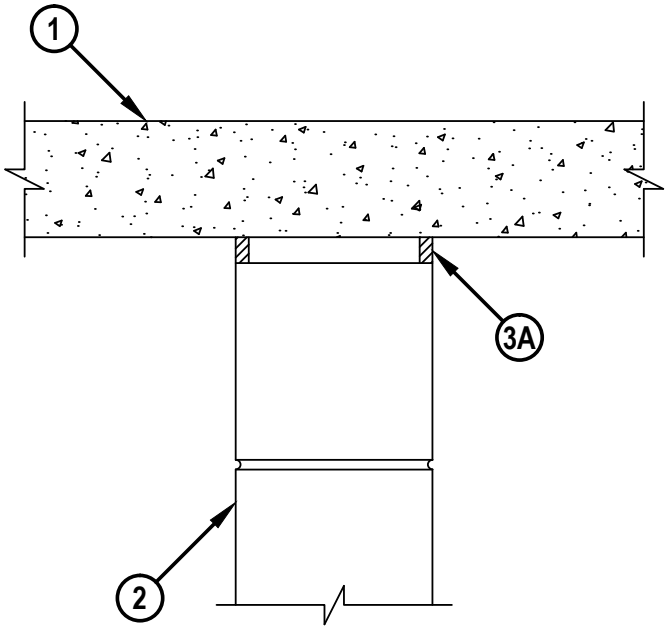

1. Floor Assembly — Min 2-1/2 in. (64 mm) thick reinforced lightweight or normal weight (100-150 pcf or 1600-2400 kg/m3) structural concrete. Floor may also be constructed of any min 6 in. (152 mm) thick UL Classified hollow-core Precast Concrete Units*.
   See Precast Concrete Units (CFTV) category in the Fire Resistance Directory for names of manufacturers.
2. Wall Assembly — Min 8 in. (203 mm) thick steel reinforced lightweight or normal weight (100-150 pcf or 1600-2400 kg/m3) structural concrete. Wall may also be constructed of any UL Classified Concrete Blocks*.
   See Concrete Blocks (CAZT) category in the Fire Resistance Directory for names of manufacturers.
3. Joint System — Max separation between bottom of floor assembly and top of concrete wall at time of installation is 1 in. (25 mm). The joint system is designed to accommodate a max 12.5 percent compression or extension from its installed width. The joint system shall consists of the following:
   A. Fill, Void or Cavity Material* - Sealant — A 1/2 in. (13 mm) thickness of fill material installed within the joint, flush with each surface of the wall.
      HILTI CONSTRUCTION CHEMICALS, DIV OF HILTI INC — CP606 Flexible Firestop Sealant
   B. Forming Material — (Optional, Not Shown) - Mineral wool insulation or polyurethane foam backer rod. Forming material to be recessed from both surfaces of the wall as required to accommodate the required thickness of fill material.

*Bearing the UL Classification Mark

Hilti Firestop Systems

Reproduced by HILTI, Inc. Courtesy of
Underwriters Laboratories, Inc.
June 26, 2008

Classified by
Underwriters Laboratories, Inc.
to UL 2079 and CAN/ULC-S115

System No. HW-D-0285

Assembly Rating — 2 Hr
Nominal Joint Width — 2 In.
L Rating At Ambient — Less Than 1 CFM/Lin Ft
L Rating At 400°F — Less Than 1 CFM/Lin Ft
Class II Movement Capabilities — 12.5% Compression or Extension

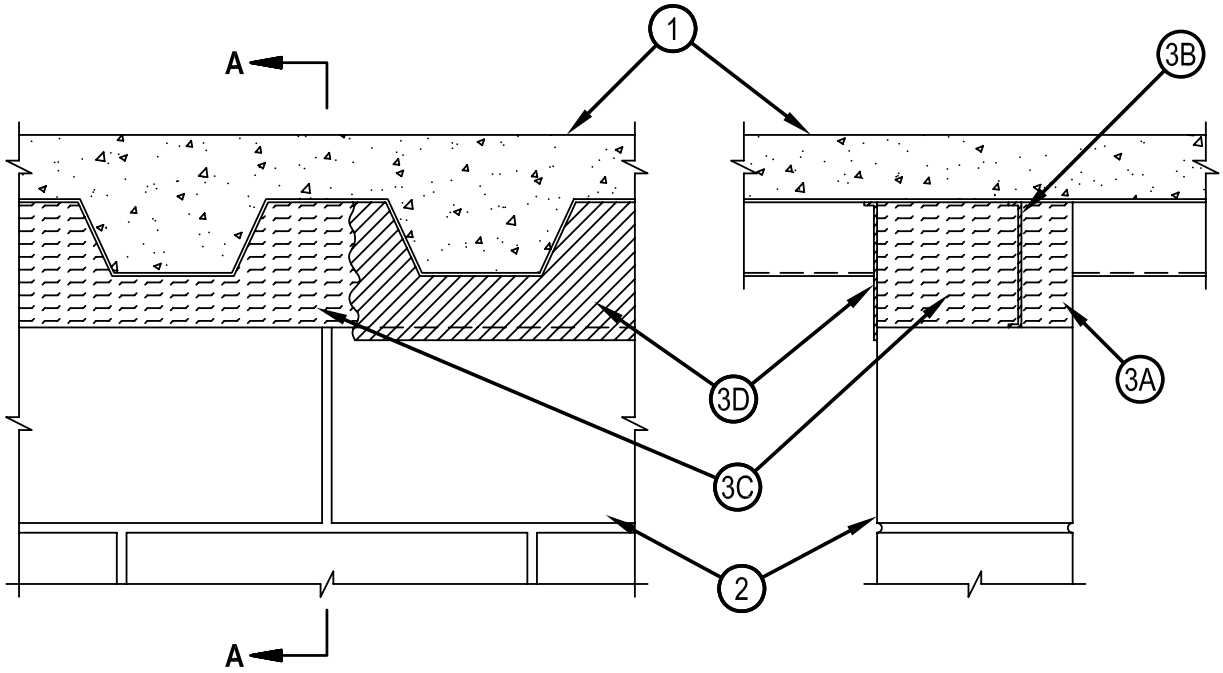

SECTION A-A

1. Floor Assembly — The fire rated fluted steel unit/concrete floor assembly shall be constructed of the materials and in a manner described in the individual D900 Floor-Ceiling Design in the UL Fire Resistance Directory and shall include the following construction features:
   A. Steel Floor and Form Units* — Max 3 in. (76 mm) deep galv steel fluted floor units.
   B. Concrete — Min 2-1/2 in. (64 mm) thick reinforced concrete as measured from top plane of the floor units.

1A. Roof Assembly — (Not Shown) —As an alternate to the floor assembly, a fire rated fluted steel deck roof assembly may be used. The roof assembly shall be constructed of the materials and in the manner described in the individual P900 Series Roof-Ceiling Design in the UL Fire Resistance Directory. The hourly rating of the roof assembly shall be equal to or greater than the hourly rating of the wall assembly. The roof assembly shall include the following construction features:
   A. Steel Roof Deck — Max 2 in. (51 mm) deep galv steel fluted roof deck.
   B. Roof Insulation — Min 2-1/4 in. (57 mm) thick poured insulating concrete, as measured from the top plane of the floor units.

Reproduced by HILTI, Inc. Courtesy of
Underwriters Laboratories, Inc.
June 04, 2010

Classified by
Underwriters Laboratories, Inc.
to UL 2079 and CAN/ULC-S115

System No. HW-D-0285

Assembly Rating — 2 Hr
Nominal Joint Width — 2 In.
L Rating At Ambient — Less Than 1 CFM/Lin Ft
L Rating At 400°F — Less Than 1 CFM/Lin Ft
Class II Movement Capabilities — 12.5% Compression or Extension

2. Wall Assembly — Min 8 in. (203 mm) thick steel-reinforced lightweight or normal weight (100-150 pcf or 1600-2400 kg/m3) structural concrete. Wall may also be constructed of any UL Classified Concrete Blocks*.
   See Concrete Blocks (CAZT) category in the Fire Resistance Directory for names of manufacturers.
3. Joint System — Max separation between bottom of floor or roof and top of wall at time of installation of joint system is 2 in. (51 mm). The joint system is designed to accommodate a max 12.5 percent compression or extension from its installed width. The joint system shall consist of the following:
   A. Forming Material — Nom 4 pcf (64 kg/m3) mineral wool batt insulation, min 2 in. (51 mm) wide, compressed and firmly packed to fill the flutes and the gap between the top of the wall and bottom of the floor or roof as a permanent form on one side of the wall. Batt insulation cut to the shape of the fluted steel deck, approx 33 percent larger than the flutes. Pieces compressed and installed cut edge first into the flutes above the top of the wall. Additional pieces of batt insulation, min 2 in. wide, installed edge-first into joint opening between bottom of fluted steel deck and top of wall, parallel with joint direction, such that batt sections are compressed min 33 percent in thickness. Compressed batt sections are flush with one surfaces of wall. Adjoining lengths of batt to be tightly butted with butted seams spaced min 48 in. (1.22 m) apart along the length of the joint.
   ROCK WOOL MANUFACTURING CO — Delta Board
   B. Fill, Void or Cavity Material* — Min 1/8 in. (3.2 mm) wet thickness (min 1/16 in. or 1.6 mm dry thickness) of fill material sprayed or troweled into the joint to completely cover mineral wool forming material and to overlap a min of 1/2 in. (13 mm) onto wall and steel deck, within joint cavity.
   HILTI CONSTRUCTION CHEMICALS, DIV OF HILTI INC — CP672 Firestop Spray
   C. Forming Material — Nom 4 pcf (64 kg/m3) mineral wool batt insulation, min 6 in. wide, compressed and firmly packed to completely fill the flutes and the gap between the top of the wall and bottom of the floor or roof as a permanent form. Batt insulation cut to the shape of the fluted steel deck, approx 33 percent larger than the flutes. Pieces compressed and installed cut edge first into the flutes above the top of the wall. Additional pieces of batt insulation, min 6 in. (152 mm) wide, installed edge-first into joint opening between bottom of fluted steel deck and top of wall, parallel with joint direction, such that batt sections are compressed min 33 percent in thickness. Compressed batt sections are flush with one surface of wall. Adjoining lengths of batt to be tightly butted with butted seams spaced min 48 in. (1.22 m) apart along the length of the joint.
   ROCK WOOL MANUFACTURING CO — Delta Board
   C1. Forming Material*-Plugs — (Optional-Not Shown) Performed mineral wool plugs, formed to the shape of the fluted floor units, friction fit to completely fill the flutes. The plugs shall be tight to the mineral wool, Item 3A, and flush with one wall surface. Additional forming material, described in Item 3C, to be used in conjunction with the plugs to fill the gap between the top of the wall and the bottom of the steel floor units.
   HILTI CONSTRUCTION CHEMICALS, DIV OF HILTI INC — CP777 Speed Plugs
   D. Fill, Void or Cavity Material* — Min 1/8 in. (3.2 mm) wet thickness (min 1/16 in. or 1.6 mm dry thickness) of fill material sprayed or troweled on one side of the wall to completely cover mineral wool forming material and to overlap a min of 1/2 in. (13 mm) onto wall and steel deck on accessible side of wall.
   HILTI CONSTRUCTION CHEMICALS, DIV OF HILTI INC — CP672 Firestop Spray or CFS-SP WB Firestop Joint Spray
   *Bearing the UL Classification Mark

Reproduced by HILTI, Inc. Courtesy of
Underwriters Laboratories, Inc.
June 04, 2010

HWD 0286

Classified by
Underwriters Laboratories, Inc.
to UL 2079 and CAN/ULC-S115

System No. HW-D-0286

Assembly Rating — 2 Hr
Nominal Joint Width — 2 In.
L Rating At Ambient — Less Than 1 CFM/Lin Ft
L Rating At 400°F — Less Than 1 CFM/Lin Ft
Class II Movement Capabilities — 12.5% Compression

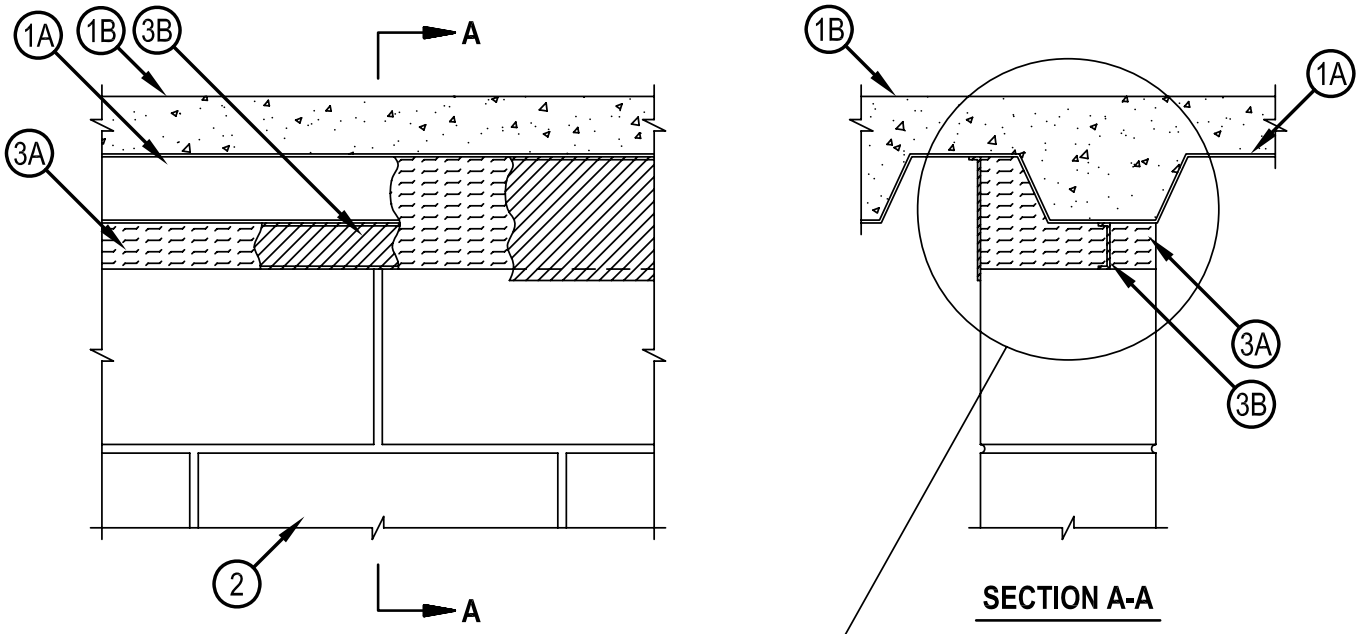

SECTION A-A

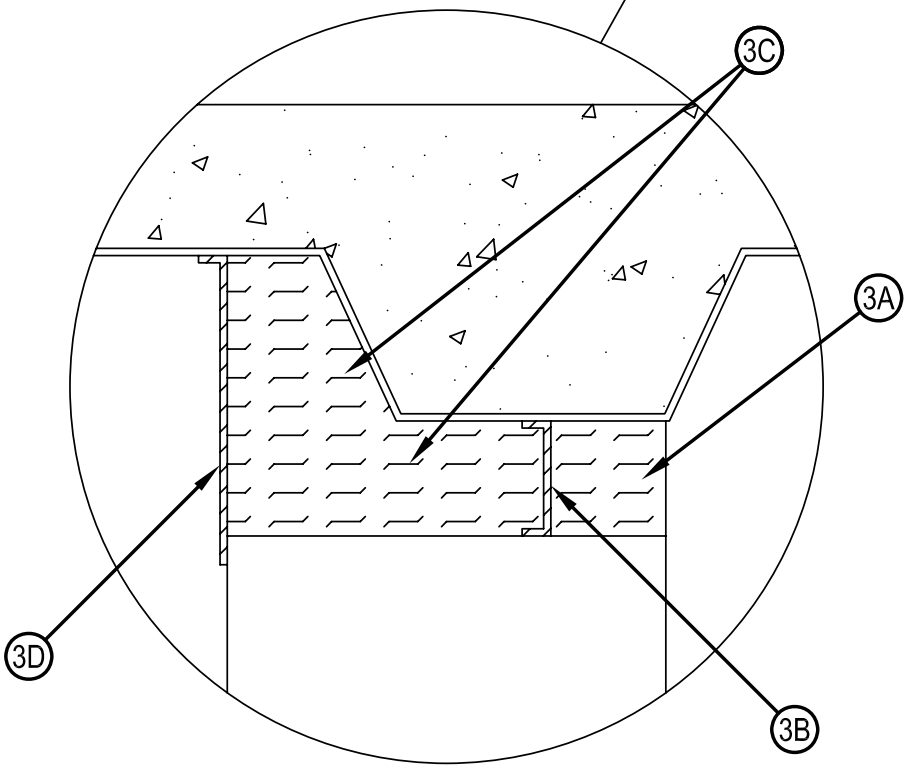

Hilti Firestop Systems

Reproduced by HILTI, Inc. Courtesy of
Underwriters Laboratories, Inc.
June 04, 2010

Classified by
Underwriters Laboratories, Inc.
to UL 2079 and CAN/ULC-S115

System No. HW-D-0286

Assembly Rating — 2 Hr
Nominal Joint Width — 2 In.
L Rating At Ambient — Less Than 1 CFM/Lin Ft
L Rating At 400°F — Less Than 1 CFM/Lin Ft
Class II Movement Capabilities — 12.5% Compression

1. Floor Assembly — The 2 hr fire-rated fluted steel deck/concrete floor assembly shall be constructed of the materials and in the manner described in the individual D900 Floor-Ceiling Design in the UL Fire Resistance Directory and shall include the following construction features:
   A. Steel Floor and Form Units* — Max 3 in. (76 mm) deep galv steel fluted floor units.
   B. Concrete — Min 2-1/2 in. (64 mm) thick reinforced concrete, as measured from the top plane of the floor units.
2. Wall Assembly — Min 8 in. (203 mm) thick reinforced lightweight or normal weight (100-150 pcf or 1600-2400 kg/m3) structural concrete. Wall shall be installed parallel with the flutes of the steel floor and form units (Item 1A). Wall may also be constructed of any UL Classified 2 hr fire rated Concrete Blocks*. When wall is constructed of concrete blocks, the top course of block shall be filled with concrete, grout or mortar.
   See Concrete Blocks (CAZT) category in the Fire Resistance Directory for names of manufacturers.
3. Joint System — Max separation between bottom of spray-applied fire resistive and top of the wall at time of installation of joint system is 2 in. (51 mm). The joint system is designed to accommodate a max 12.5 percent compression or extension from its installed width. The joint system consists of the following:
   A. Forming Material* — Min 4 pcf (64 kg/m3) mineral wool batt insulation cut into strips min 2 in. (51 mm) wide compressed 33 percent in thickness and inserted into the gap between the top of the wall and the bottom of the floor units flush with one surface of the wall.
   ROCK WOOL MANUFACTURING CO — Delta Board
   B. Fill, Void or Cavity Material* — Min 1/8 in. (3.2 mm) wet thickness (min 1/16 in. or 1.6 mm dry thickness) of fill material sprayed or troweled into joint to completely cover mineral wool forming material and to overlap a min of 1/2 in. (13 mm) onto wall and steel deck within joint cavity.
   HILTI CONSTRUCTION CHEMICALS, DIV OF HILTI INC — CP672 Firestop Spray
   C. Forming Material* — Min 4 pcf (64 kg/m3) mineral wool batt insulation cut into strips min 6 in. (152 mm) wide, compressed 33 percent in thickness and inserted into the gap between the top of the wall and the bottom of the floor units flush with the installed forming material Item 3A. When the void beneath the steel deck is located entirely above the wall, the void shall be completely filled with mineral wool insulation compressed 33 percent in thickness. When void beneath the steel deck is located in part above the wall, that portion of the void above the wall shall be packed with additional strips of mineral wool batt insulation compressed 33 percent in thickness flush with the surface of the wall.
   ROCK WOOL MANUFACTURING CO — Delta Board
   D. Fill, Void or Cavity Material* — Min 1/8 in. (3.2 mm) wet thickness (min 1/16 in. or 1.6 mm dry thickness) of fill material sprayed or troweled to completely cover mineral wool forming material and to overlap a min of 1/2 in. (13 mm) onto wall and steel deck on accessible side of the wall.
   HILTI CONSTRUCTION CHEMICALS, DIV OF HILTI INC — CP672 Firestop Spray or CFS-SP WB Firestop Joint Spray

*Bearing the UL Classification Mark

Reproduced by HILTI, Inc. Courtesy of
Underwriters Laboratories, Inc.
June 04, 2010

Classified by
Underwriters Laboratories, Inc.
to UL 2079 and CAN/ULC-S115

System No. HW-D-0294

Assembly Rating - 4 Hr
Nominal Joint Width - 1 In.
L Rating At Ambient — Less Than 1 CFM/Lin Ft
L Rating At 400°F — Less Than 1 CFM/Lin Ft
Class II Movement Capabilities - 12.5% Compression and Extension

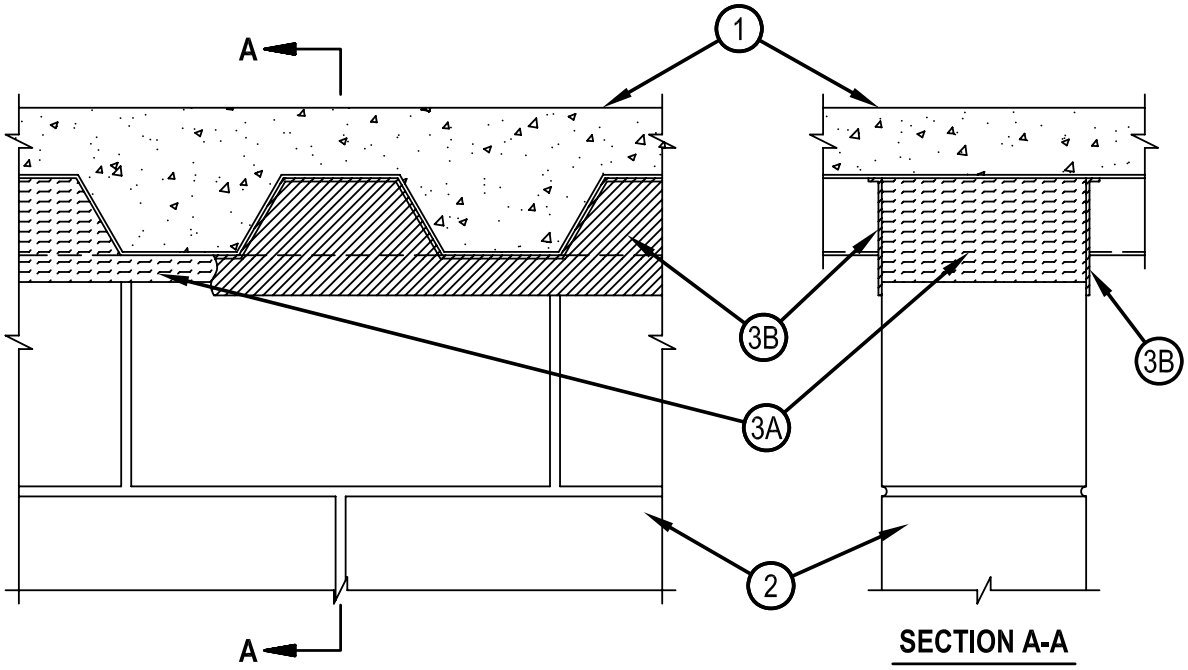

SECTION A-A

1. Floor Assembly — The fire-rated fluted steel floor unit/concrete floor assembly shall be constructed of the materials and in the manner described in the individual Floor-Ceiling Design in the Fire Resistance Directory. The hourly rating of the floor assembly shall be equal to or greater than the hourly rating of the wall assembly. The floor assembly shall include the following construction features:
   A. Steel Floor and Form Units* — Max 2 in. (51 mm) deep galv steel fluted floor units.
   B. Concrete — Min 2-1/2 in. (64 mm) thick reinforced concrete, as measured from the top plane of the floor units.
2. Wall Assembly — Min 7-1/2 in. (191 mm) thick reinforced lightweight or normal weight (100-150 pcf or 1600-2400 kg/m3) structural concrete. Wall installed perpendicular to the valleys of the fluted steel floor units. Wall may also be constructed of any UL Classified 4 hr rated Concrete Blocks*. See Concrete Blocks category in the Fire Resistance Directory for names of manufacturers.
3. Joint System — Max separation between bottom of floor units and top of wall at time of installation is 1 in. (25 mm). The joint system is designed to accommodate a max 12.5 percent compression or extension from its installed width. The joint system shall consist of a forming material and a fill material as follows:
   A. Forming Material* — Nom 4 pcf (64 kg/m3) density mineral wool batt insulation cut approx 25 percent wider than the flutes and with a length approx equal to the overall thickness of the wall. Multiple pieces stacked on top of each other, as needed, and then compressed 50 percent in thickness and inserted into the flutes of the steel deck above the wall. Additional pieces of batt insulation, having a width approximately equal to the thickness of the wall, compressed 50 percent in thickness and installed cut edge first into the joint opening between the bottom of the steel floor units and the top of wall. Adjoining lengths of batts to be tightly butted. The mineral wool batt insulation is to be flush with wall surfaces.
      THERMAFIBER INC — Type SAF
   B. Fill, Void or Cavity Material* — Min 1/8 in. (3.2 mm) wet thickness (min 1/16 in. or 1.6 mm dry thickness) of fill material sprayed or troweled on each side of the wall to completely cover mineral wool forming material and to overlap a min of 1/2 in. (13 mm) onto concrete wall and steel deck on both sides of wall.
      HILTI CONSTRUCTION CHEMICALS, DIV OF HILTI INC — CP672 Firestop Spray or CFS-SP WB Firestop Joint Spray

*Bearing the UL Classification Mark

HILTI
Hilti Firestop Systems

Reproduced by HILTI, Inc. Courtesy of
Underwriters Laboratories, Inc.
June 07, 2010

Classified by
Underwriters Laboratories, Inc.
to UL 2079 and CAN/ULC-S115

System No. HW-D-1037

Assembly Rating - 2 Hr
Nominal Joint Width - 3-1/2 In.
Class II Movement Capabilities - 14% Compression and Extension

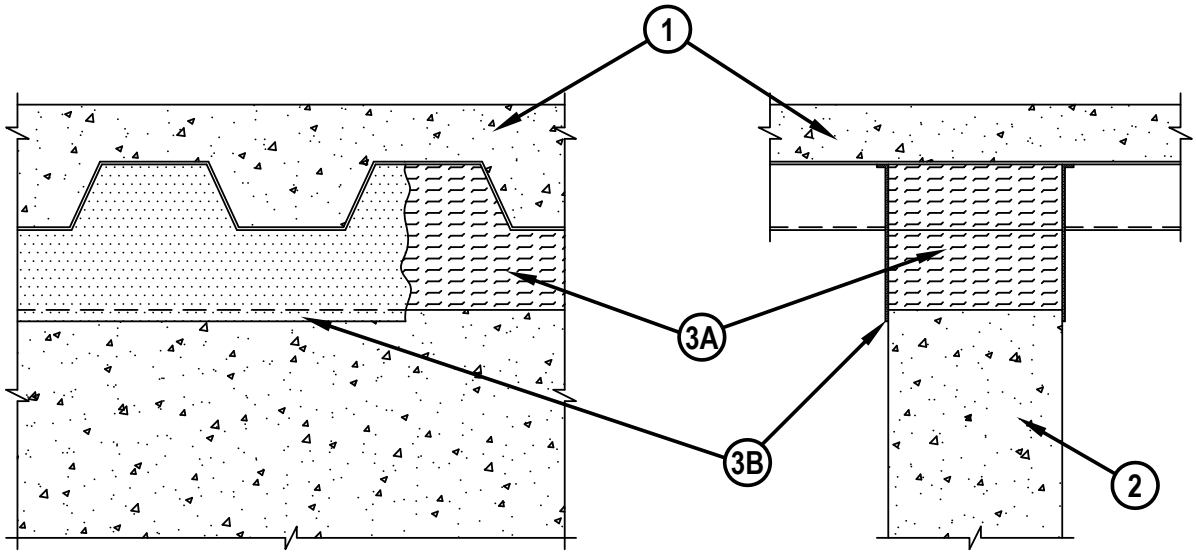

SECTION A-A

1. Floor Assembly — The fire-rated fluted steel floor unit/concrete floor assembly shall be constructed of the materials and in the manner described in the individual Floor-Ceiling Design in the Fire Resistance Directory and shall include the following construction features:
   A. Steel Floor and Form Units* — Max 3 in. (76 mm) deep galv steel fluted floor units.
   B. Concrete — Min 2-1/2 in. (64 mm) thick reinforced concrete, as measured from the top plane of the floor units.
   C. Spray-Applied Fire Resistive Materials* — (Optional)—(Not Shown)—Prior to the installation of the forming material and fill, void or cavity material (Items 3A, 3B) the steel floor units may be sprayed with a min 5/16 in. (8 mm) to max 1-3/4 in. (44 mm) thickness of fire resistive material.
   W R GRACE & CO - CONN — Type MK-6-HY

1A. Roof Assembly (Not Shown) — As an alternate to the floor assembly, a fire rated fluted steel deck roof assembly may be used. The roof assembly shall be constructed of the materials and in the manner described in the individual P900 Series Roof-Ceiling Design in the UL Fire Resistance Directory. The hourly rating of the roof assembly shall be equal to or greater than the hourly rating of the wall assembly. The roof assembly shall include the following construction features:
   A. Steel Roof Deck — Max 3 in. (76 mm) deep galv steel fluted roof deck.
   B. Roof Insulation — Min 2-1/4 in. (57 mm) thick poured insulating concrete, as measured from the top plane of the floor units.

1B. Roof Assembly — As an alternate to Items 1 and 1A, a fire rated protected fluted steel deck roof assembly may be used. The roof assembly shall be constructed of the materials and in the manner described in the individual P700 Series Roof-Ceiling Design in the UL Fire Resistance Directory. The hourly rating of the roof assembly shall be equal to or greater than the hourly rating of the wall assembly. The roof assembly shall include the following construction features:
   A. Steel Roof Deck — Max 3 in. (76 mm) deep galv steel fluted roof deck.
   B. Spray-Applied Fire Resistive Materials* — (Not Shown) - Prior to the installation of the steel ceiling runners, Forming Material and Fill, Void or Cavity Material (Items 2A, 3A, 3B), the roof assembly shall be sprayed with the type and thickness of fire resistive material indicated in the individual P700 Series design.

2. Wall Assembly — Min 8 in. (203 mm) thick steel reinforced lightweight or normal weight (100-150 pcf) (1600 -2400 kg/m3) structural concrete. Wall may also be constructed of any UL Classified Concrete Blocks*.
   See Concrete Blocks (CAZT) category in the Fire Resistance Directory for names of manufacturers.

Reproduced by HILTI, Inc. Courtesy of
Underwriters Laboratories, Inc.
June 07, 2010

Classified by
Underwriters Laboratories, Inc.
to UL 2079 and CAN/ULC-S115

System No. HW-D-1037

Assembly Rating - 2 Hr
Nominal Joint Width - 3-1/2 In.
Class II Movement Capabilities - 14% Compression and Extension

3. Joint System — Max separation between bottom of floor units and top of concrete wall at time of installation is 3-1/2 in. (89 mm). The joint system is designed to accommodate a max 14 percent compression or extension from its installed width. The joint system shall consists of the following:

A. Forming Material* — Nom 4 in. (102 mm) thick pieces of nom 4 pcf (64 kg/m3) forming material sized to attain a min compression rate of 50 percent in the thickness direction firmly packed to completely fill the flutes. Additional pieces of batt insulation, min 8 in. (203 mm) wide, shall be compressed 50 percent in thickness and installed edge first into joint opening between bottom of fluted floor or roof units and top of concrete wall.

THERMAFIBER INC — Type SAF

A1. Forming Material*—Plugs — Optional-Not Shown) Performed mineral wool plugs, formed to the shape of the fluted floor units, friction fit to completely fill the flutes above the ceiling runner. The plugs shall be flush with both wall surfaces. Additional forming material, described in Item 3A, to be used in conjunction with the plugs to fill the gap between the top of the wall and the bottom of the steel floor units.

HILTI CONSTRUCTION CHEMICALS, DIV OF
HILTI INC — CP777 Speed Plugs

A2. Forming Material — As an alternate to Item 3A, min 6 pcf (96 kg/m3) ceramic blanket insulation installed in joint as a permanent form. Nominal 4 in (102 mm) thick pieces of nominal 6 pcf (96 kg/m3) forming material sized to attain a min compression rate of 50 percent in the thickness direction firmly packed to completely fill the flutes. Additional pieces of batt insulation, min 8 in. (203 mm) wide, shall be compressed 50 percent in thickness and installed edge first into joint opening between bottom of fluted floor or roof units and top of concrete wall.

B. Fill, Void or Cavity Material* - Sealant — A 1/8 in. (3.2 mm) wet thickness of fill material sprayed of trowled on each side of wall to completely cover mineral wool forming material and to overlap a min 1/2 in. (13 mm) onto steel floor units and concrete wall. When spray-applied fire resistive material* is applied to the steel deck, the fill material is to overlap the wall a min ½ in. and the spray-applied fire resistive material a min of 2 in. (51 mm) on both sides of the wall.

HILTI CONSTRUCTION CHEMICALS, DIV OF
HILTI INC — CP672 Firestop Spray or CFS-SP WB Firestop Joint Spray

*Bearing the UL Classification Mark

Reproduced by HILTI, Inc. Courtesy of
Underwriters Laboratories, Inc.
June 07, 2010

System No. HW-D-1042

Classified by
Underwriters Laboratories, Inc.
to UL 2079 and CAN/ULC-S115

ANSI/UL2079	CAN/ULC S115
Assembly Rating — 4 Hr F Rating — 4 Hr	F Rating — 4 Hr
Nominal Joint Width - 2 In.	FT Rating — 4 Hr
Class II Movement Capabilities - 12.5% Compression or Extension	FH Rating — 4 Hr
	FTH Rating — 4 Hr
	Nominal Joint Width - 2 In.
	Class II Movement Capabilities - 12.5% Compression or Extension

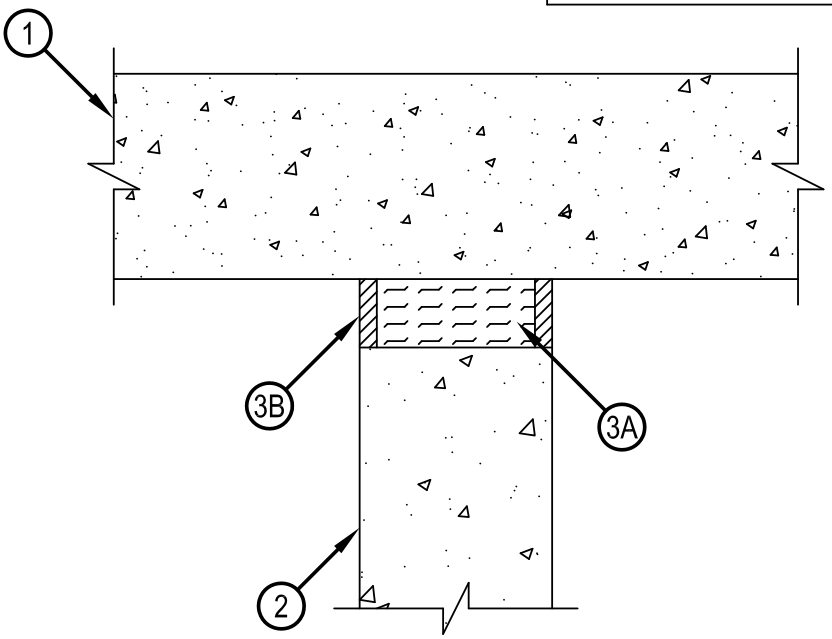

1. Floor Assembly — Min 6 in. thick reinforced lightweight or normal weight (100 - 150 pcf) structural concrete.
2. Wall Assembly — Min 6 in. thick reinforced lightweight or normal weight (100-150 pcf) structural concrete. Wall may also be constructed of any UL Classified Concrete Blocks*.
   See Concrete Blocks (CAZT) category in the Fire Resistance Directory for names of manufacturers.
3. Joint System — Max width of joint (at time of installation of joint system) is 2 in. The joint system is designed to accommodate a max 12.5 percent compression or extension from its installed width. The joint system shall consist of the following:
   A. Forming Material — Min 4 pcf mineral wool batt insulation installed in joint opening as a permanent form. Pieces of batt cut to min width of 5 in. and installed edge-first into joint opening, parallel with joint direction, such that batt sections are compressed min 50 percent in thickness and that the compressed batt sections are recessed a min of 1/2 in. from each surface of the wall to accommodate the required thickness of fill material. Adjoining lengths of batt to be tightly-butted with butted seams spaced min 24 in. apart along the length of the joint.
   THERMAFIBER INC — Type SAF
   B. Fill, Void or Cavity Material* - Sealant — Min 1/2 in. thickness of fill material applied within the joint, flush with each surface of wall.
   HILTI CONSTRUCTION CHEMICALS, DIV OF HILTI INC — CP601S Elastomeric Firestop Sealant or CFS-S SIL GG Sealant

*Bearing the UL Classification Mark

Hilti Firestop Systems

Reproduced by HILTI, Inc. Courtesy of
Underwriters Laboratories, Inc.
December 23, 2013

Classified by
Underwriters Laboratories, Inc.
to UL 2079 and CAN/ULC-S115

System No. HW-D-1058

Assembly Rating — 3 Hr
Nominal Joint Width — 3-1/4 In.
Class II Movement Capabilities — 25% Compression or Extension

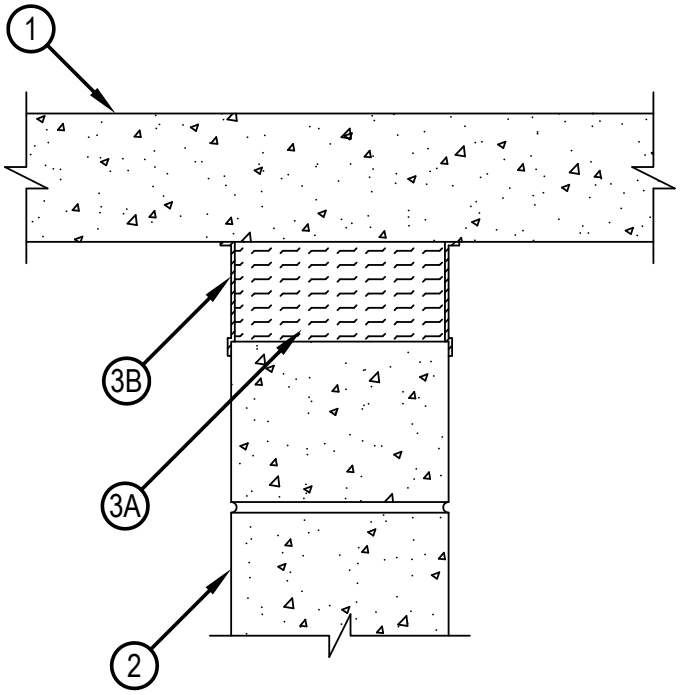

1. Floor Assembly — Min 4-1/2 in. thick steel-reinforced lightweight or normal weight (100-150 pcf) structural concrete.
2. Wall Assembly — Min 8 in. thick steel-reinforced lightweight or normal weight (100-150 pcf) structural concrete. Wall may also be constructed of any UL Classified Concrete Blocks*.
   See Concrete Blocks (CAZT) category in the Fire Resistance Directory for names of manufacturers.
3. Joint System — Max width of joint (at time of installation of joint system) is 3-1/4 in. The joint system is designed to accommodate a max 25 percent compression or extension from its installed width. The joint system shall consist of the following:
   A. Forming Material* — Min 4.0 pcf mineral wool batt insulation installed in joint opening as a permanent form. Batt cut to min width of 8 in. and installed cut edge-first into joint opening, parallel with joint direction, such that batt sections are compressed min 50 percent in thickness and such that the compressed batt sections are flush with both surfaces of wall. Adjoining lengths of batt to be tightly butted with butted seams spaced min 48 in. apart along the lengths of the joint.
   ROCK WOOL MANUFACTURING CO — Delta Board
   B. Fill, Void or Cavity Material* — Min 1/8 in. wet thickness of fill material sprayed, painted or trowelled on each side of wall to completely cover mineral wool forming material and to overlap a min 1/2 in. onto concrete floor and concrete wall.
   HILTI CONSTRUCTION CHEMICALS, DIV OF
   HILTI INC — CP672 Firestop Spray or CFS-SP WB Firestop Joint Spray

*Bearing the UL Classification Mark

Hilti Firestop Systems

Reproduced by HILTI, Inc. Courtesy of
Underwriters Laboratories, Inc.
June 07, 2010

UL/cUL SYSTEM NO. HW-D-1069

TOP OF WALL JOINT : CONCRETE WALL OR BLOCK WALL ASSEMBLY

ASSEMBLY RATING = 2-HR.

CLASS II MOVEMENT CAPABILITIES - 40% COMPRESSION OR EXTENSION

HWD1069b.052510

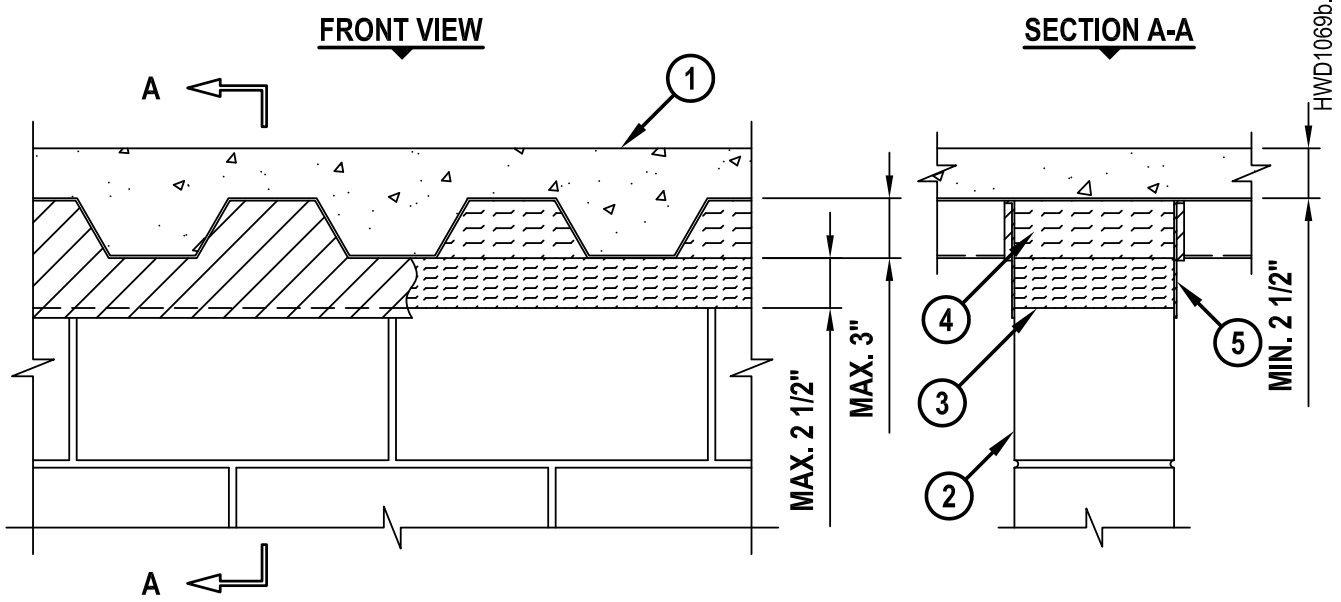

1. FLOOR OR ROOF ASSEMBLY (2-HR. FIRE-RATING) :
   A. LIGHTWEIGHT OR NORMAL WEIGHT CONCRETE FLOOR (MIN. 2-1/2" THICK) OVER METAL DECKING (UL/cUL CLASSIFIED D900 SERIES).
   B. INSULATING CONCRETE (MIN. 2-1/4" THICK) OVER METAL DECKING (UL/cUL CLASSIFIED P900 SERIES).
2. CONCRETE WALL ASSEMBLY CONSTRUCTED PERPENDICULAR OR PARALLEL TO FLUTES (PERPENDICULAR SHOWN) (2-HR. FIRE-RATING) :
   A. LIGHTWEIGHT OR NORMAL WEIGHT CONCRETE WALL (MINIMUM 6" THICK).
   B. ANY UL/cUL CLASSIFIED CONCRETE BLOCK WALL.
3. MINERAL WOOL (MINIMUM 4 PCF DENSITY) COMPRESSED 50% AND INSERTED INTO JOINT, FLUSH WITH BOTH SIDES OF WALL ASSEMBLY.
4. HILTI CP 777 SPEED PLUGS FRICTION FITTED TO COMPLETELY FILL FLUTE, FLUSH WITH BOTH SIDES OF WALL (WHEN PERPENDICULAR TO FLUTES) (SEE NOTE BELOW).
5. MINIMUM 1/8" (WET) THICKNESS HILTI CFS-SP WB FIRESTOP JOINT SPRAY OR HILTI CP 672 SPEED SPRAY TO COMPLETELY COVER MINERAL WOOL AND TO OVERLAP MINIMUM 1/2" ONTO CONCRETE WALL OR CONCRETE BLOCK WALL AND METAL DECK ON BOTH SIDES OF WALL ASSEMBLY.

NOTE : AS AN ALTERNATE TO HILTI CP 777 SPEED PLUGS, MINERAL WOOL (MIN. 4 PCF DENSITY) COMPRESSED 50% MAY BE USED.

Hilti Firestop Systems

HILTI, Inc.
Tulsa, Oklahoma USA (800) 879-8000

Sheet	1 of 1
Scale	1/8" = 1"
Date	May 25, 2010

Drawing No. HWD 1069b

Saving Lives through Innovation and Education

Classified by
Underwriters Laboratories, Inc.
to UL 2079 and CAN/ULC-S115

System No. HW-D-1078

Assembly Rating — 2 Hr
Nominal Joint Width — 3 In.
Class II Movement Capabilities —17% Compression Or Extension
L Rating at Ambient — Less than 1 CFM/Lin Ft
L Rating at 400 F — Less than 1 CFM/Lin Ft

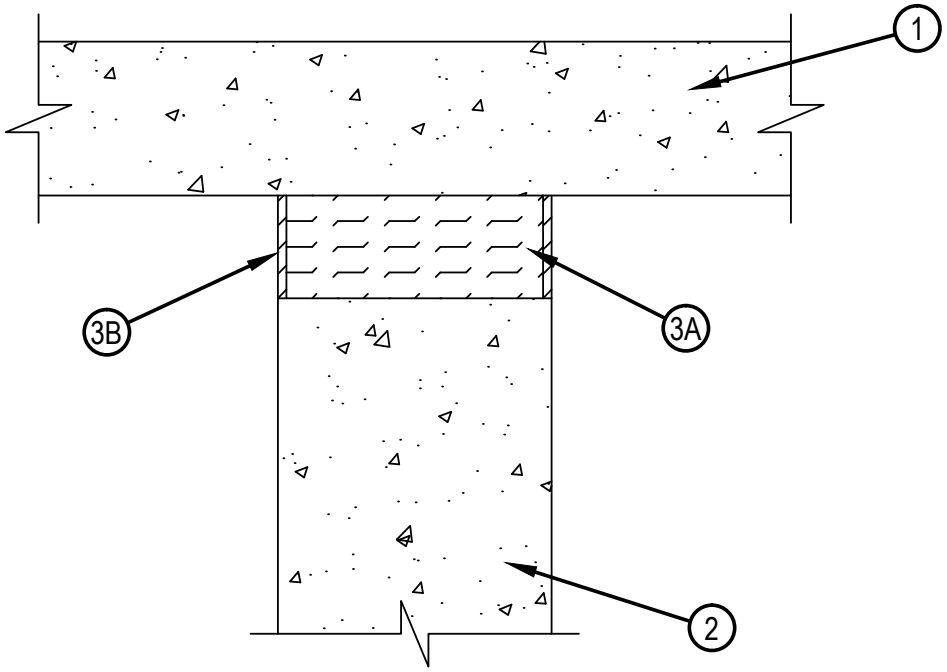

1. Floor Assembly — Min 4-1/2 in. (114 mm) thick reinforced lightweight or normal weight (100-150 pcf or 1600-2400 kg /m3) structural concrete.
2. Wall Assembly — Min 4-1/2 in. (114 mm) thick reinforced lightweight or normal weight (100-150 pcf or 1600-2400 kg /m3) structural concrete. Wall may also be constructed of any UL Classified Concrete Blocks*.
   See Concrete Blocks (CAZT) category in the Fire Resistance Directory for names of manufacturers.
3. Joint System — Max separation between bottom of floor and top of wall (at time of installation of joint system) is 3 in. (76 mm). The joint system is designed to accommodate a max 17 percent in compression or extension from its installed width. The joint system shall consist of the following:
   A. Forming Material — Min 4 pcf (64 kg/m3) mineral wool batt insulation installed in joint opening as a permanent form. Pieces of batt cut to min width of 4 in. (102 mm) and installed edge-first into joint opening, parallel with joint direction, such that batt sections are compressed min 40 percent in thickness and that the compressed batt sections are recessed from both surfaces of the wall to accommodate the required thickness of fill material. Adjoining lengths of batt to be tightly-butted with butted seams spaced min 24 in. (610 mm) apart along the length of the joint.
   FIBREX INSULATIONS INC — FBX Safing Insulation
   A1. Forming Material (as an alternate to item 3A) — Min 6 pcf (96 kg/m3) ceramic blanket insulation installed in joint as a permanent form. Pieces of batt cut to min width of 4 in. (102 mm) and installed edge-first into joint opening, parallel with joint direction, such that batt sections are compressed min 50 percent in thickness and that the compressed batt sections are recessed from both surfaces of the wall to accommodate the required thickness of fill material. Adjoining lengths of batt to be tightly-butted with butted seams spaced min 24 in. (610 mm) apart along the length of the joint.
   B. Fill, Void or Cavity Material* — Sealant — Min 1/4 in. (6 mm) thickness of fill material applied within the joint, flush with both surfaces of wall.
   HILTI CONSTRUCTION CHEMICALS, DIV OF
   HILTI INC — CP606 Flexible Firestop Sealant

*Bearing the UL Classification Mark

HILTI
Hilti Firestop Systems

Reproduced by HILTI, Inc. Courtesy of
Underwriters Laboratories, Inc.
July 13, 2009

Classified by
Underwriters Laboratories, Inc.
to UL 2079 and CAN/ULC-S115

System No. WW-D-0017

Assembly Rating — 2 Hr
Nominal Joint Width — 2 In.
L Rating At Ambient — Less Than 1 CFM/Lin Ft
L Rating At 400°F — Less Than 1 CFM/Lin Ft
Class II Movement Capabilities — 12.5% Compression or Extension

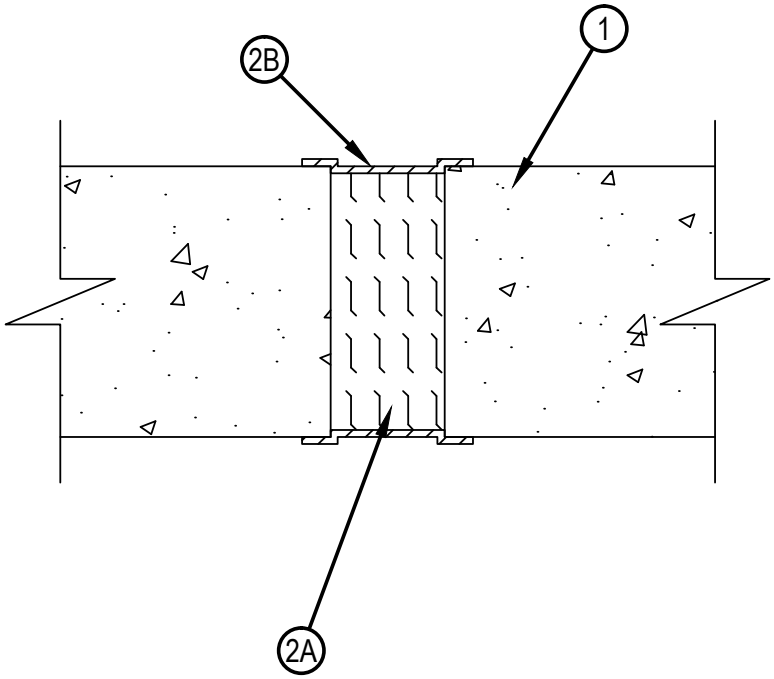

1. Wall Assembly — Min 4-1/2 in (114 mm). thick steel-reinforced lightweight or normal weight (100-150 pcf or 1600-2400 kg/m3) structural concrete. Wall may also be constructed of any UL Classified Concrete Blocks*.
2. Joint System — Max width of joint (at time of installation of joint system) is 2 in. (51 mm). The joint system is designed to accommodate a max 12.5 percent compression or extension from its installed width. The joint system shall consist of the following:
   A. Forming Material* — Min 4 pcf (64 kg/m3) mineral wool batt insulation installed in joint opening as a permanent form. Batt cut to min width of 4-1/4 in. (108 mm) and installed cut edge-first into joint opening, parallel with joint direction, such that batt sections are compressed min 50 percent in thickness and such that the compressed batt sections are recessed from both surfaces of wall to accommodate the required thickness of fill material. Adjoining lengths of batt to be tightly butted with butted seams spaced min 48 in. (1.2 m) apart along the lengths of the joint.
   ROCK WOOL MANUFACTURING CO — Delta Board
   B. Fill, Void or Cavity Material* — 1/16 in. (1.6 mm) dry thickness (min 1/8 in. or 3.2 mm wet thickness) of fill material applied within the joint, flush with both surfaces of wall and lapping 1/2 in. (13 mm) onto surfaces of wall on both sides of wall assembly.
   HILTI CONSTRUCTION CHEMICALS, DIV OF HILTI INC — CP672 Firestop Spray or CFS-SP WB Firestop Joint Spray

*Bearing the UL Classification Mark

Hilti Firestop Systems

Reproduced by HILTI, Inc. Courtesy of
Underwriters Laboratories, Inc.
June 07, 2010

Classified by
Underwriters Laboratories, Inc.
to UL 2079 and CAN/ULC-S115

System No. WW-D-0032

Assembly Rating - 3Hr
Nominal Joint Width - 1 in.
L Rating At Ambient — Less Than 1 CFM/Lin Ft
L Rating At 400°F — Less Than 1 CFM/Lin Ft
Class II Movement Capabilities - 12.5% Compression and Extension

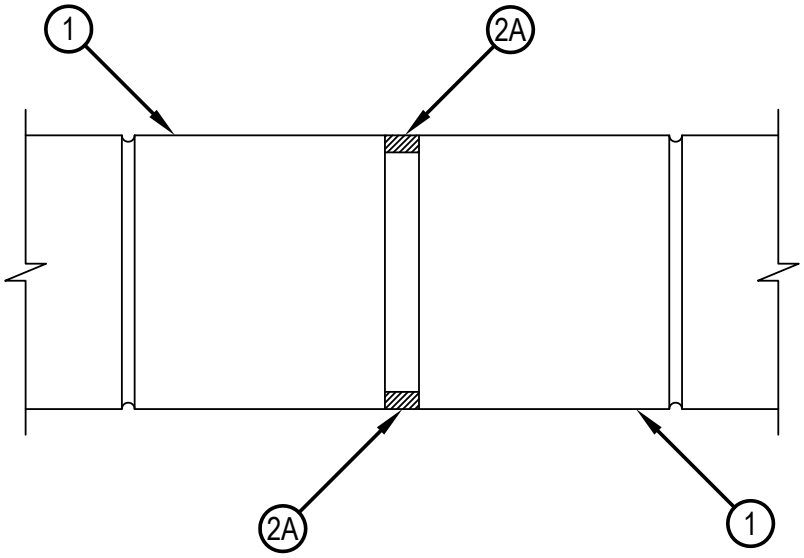

1. Wall Assembly — Min 8 in. (203 mm) thick steel reinforced lightweight or normal weight (100-150 pcf or 1600-2400 kg/m3) structural concrete. Wall may also be constructed of any UL Classified Concrete Blocks*.
   See Concrete Blocks (CAZT) category in the Fire Resistance Directory for names of manufacturers.
2. Joint System — Max width of joint (at time of installation) is 1 in. (25 mm). The joint system is designed to accommodate a max 12.5 percent compression or extension from its installed width. The joint system shall consists of the following:
   A. Fill, Void or Cavity Material* - Sealant — A 1/2 in. (13 mm) thickness of fill material installed within the joint, flush with each surface of the wall.
   HILTI CONSTRUCTION CHEMICALS, DIV OF HILTI INC — CP606 Flexible Firestop Sealant
   B. Forming Material — (Optional, Not Shown) - Mineral wool insulation or polyurethane foam backer rod. Forming material to be recessed from both surfaces of the wall as required to accommodate the required thickness of fill material.

*Bearing the UL Classification Mark

Hilti Firestop Systems

Reproduced by HILTI, Inc. Courtesy of
Underwriters Laboratories, Inc.
June 26, 2008

Classified by
Underwriters Laboratories, Inc.
to UL 2079 and CAN/ULC-S115

System No. WW-D-0040

ANSI/UL2079	CAN/ULC S115
Assembly Ratings — 1 and 2 Hr (See Item 2)	F Ratings — 1 and 2 Hr (See Item 2)
Nominal Joint Width - 3/4 In.	FT Ratings — 1 and 2 Hr (See Item 2)
Class II Movement Capabilities — 17% Compression or Extension	FH Ratings — 1 and 2 Hr (See Item 2)
L Rating At Ambient — Less Than 1 CFM/sq ft (See Item 3)	FTH Ratings — 1 and 2 Hr (See Item 2)
L Rating At 400 F — Less Than 1 CFM/sq ft (See Item 3)	Nominal Joint Width - 3/4 In.
	Class II Movement Capabilities — 17% Compression or Extension
	L Rating At Ambient — Less Than 1 CFM/sq ft (See Item 3)
	L Rating At 400 F — Less Than 1 CFM/sq ft (See Item 3)

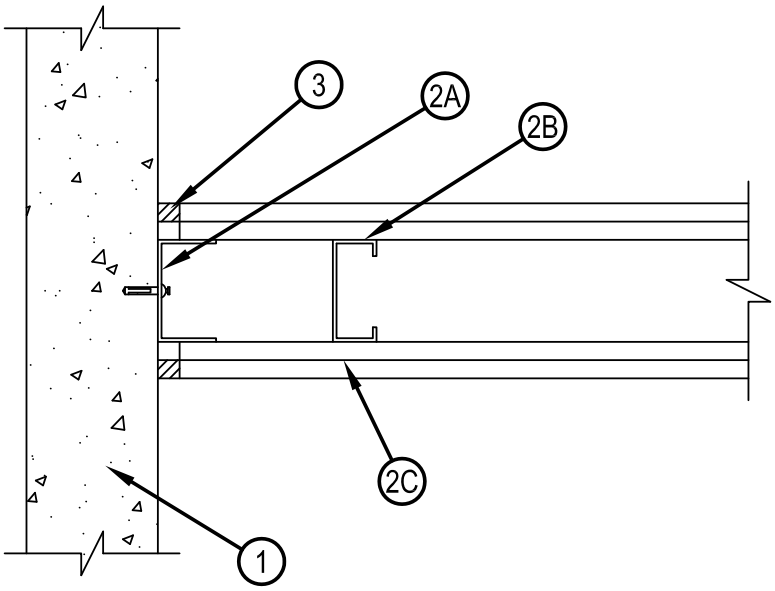

Hilti Firestop Systems

Reproduced by HILTI, Inc. Courtesy of
Underwriters Laboratories, Inc.
December 23, 2013

System No. WW-D-0040

1. Concrete Wall Assembly — Min 4-1/2 in. (114 mm) thick reinforced lightweight or normal weight (100-150 pcf or 1600-2400 kg/m3) structural concrete. Wall may also be constructed of any UL Classified Concrete Blocks*.
   See Concrete Blocks (CAZT) category in the Fire Resistance Directory for names of manufacturers.
2. Gypsum Wall Assembly — The 1 or 2 h fire rated gypsum board/steel stud wall assembly shall be constructed of the materials and in the manner specified in the individual U400, V400 or W400 Series Wall and Partition Design in the UL Fire Resistance Directory and shall include the following construction features:
   A. Steel Runners — Runners of wall assembly shall consist of min No. 25 gauge galv steel channels sized to accommodate steel studs (Item 2B). Runner to be provided with 1-1/4 in. (32 mm) flanges. Runner secured to concrete wall assembly with steel concrete fasteners spaced 12 in. (305 mm) OC.
   B. Studs — Steel studs to be min 3-1/2 in. (89 mm) wide. Studs cut 1/2 to 3/4 in. (13 to 19 mm) less in length than assembly height with bottom nesting in and resting on floor runner and with top nesting in ceiling runner without attachment. First stud adjacent to concrete wall assembly located max 4 in. (102 mm) from wall face. Stud spacing not to exceed 24 in. (610 mm) OC.
   C. Gypsum Board* — For 1 hr assembly, one layer of 5/8 in. (16 mm) thick gypsum board is required in the individual Wall and Partition Design. For 2 hr assembly, two layers of 5/8 in. (16 mm) thick gypsum board are required in the individual Wall and Partition Design. Wall to be constructed as specified in the individual U400, V400 or W400 Series Design in the UL Fire Resistance Directory, except that a max 3/4 in. (19 mm) gap shall be maintained between the side of gypsum board and face of concrete wall assembly. The screws attaching the gypsum board to the first stud shall be located 4 in. (102 mm) from face of concrete wall assembly. Gypsum board not attached to side runner.

   The hourly fire rating of the joint system is equal to the hourly rating of the gypsum wall assembly.
3. Fill, Void or Cavity Material* - Sealant — Max separation between side of gypsum board and face of concrete wall assembly is 3/4 in. (19 mm). The joint system is designed to accommodate a max 17 percent compression or extension from its installed width. Min 5/8 in. (16 mm) thickness of fill material installed on each side of the wall between the side of the gypsum board and the face of the concrete wall assembly, flush with each surface of the gypsum wall.
   HILTI CONSTRUCTION CHEMICALS, DIV OF HILTI INC — CP601S Elastomeric Firestop Sealant or CP606 Flexible Firestop Sealant or CFS-S SIL GG Sealant. L Ratings apply only when CP606 or CFS-S SIL GG Sealant is used.
4. Forming Material — (Optional, Not Shown) - Mineral wool insulation, fiberglass batt insulation or polyurethane/polyethylene foam backer rod. Forming material to be recessed from both surfaces of the 2 hr fire rated wall to accommodate the required thickness of fill material.

*Bearing the UL Classification Mark

Reproduced by HILTI, Inc. Courtesy of
Underwriters Laboratories, Inc.
December 23, 2013

Underwriters Laboratories, Inc.
to UL 2079 and CAN/ULC-S115

System No. WW-D-1047

ANSI/UL2079 CAN/ULC S115	CAN/ULC S115
Nominal Joint Width - 2 In.	FT Rating — 4 Hr
Class II Movement Capabilities - 12.5% Compression or Extension	FT Rating — 4 Hr
	FH Rating — 4 Hr
	FTH Rating — 4 Hr
	Nominal Joint Width - 2 In
	Class II Movement Capabilities - 12.5% Compression or Extension

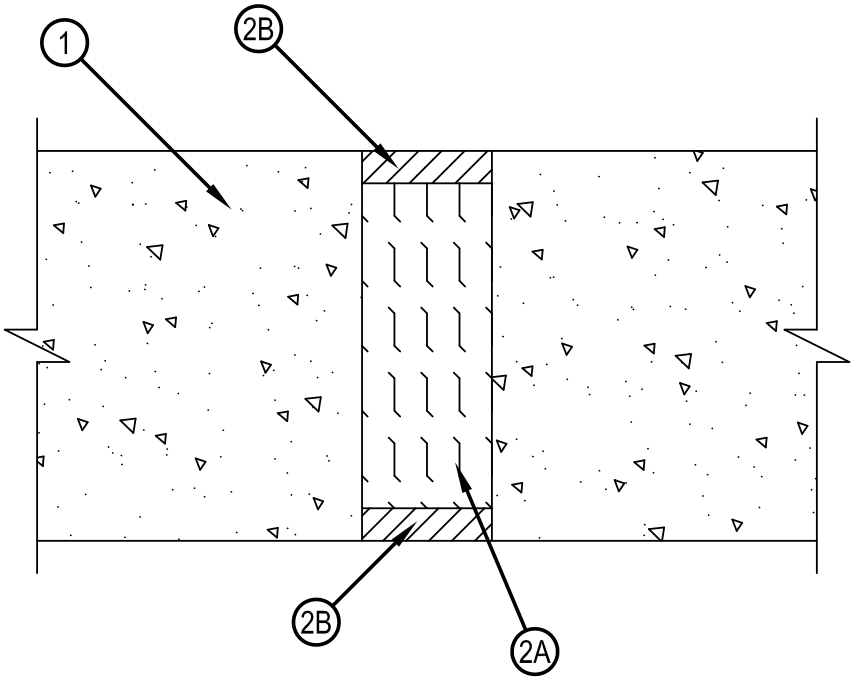

1. Wall Assembly — Min 6 in. thick reinforced lightweight or normal weight (100-150 pcf) structural concrete. Wall may also be constructed of any UL Classified Concrete Blocks*.
   See Concrete Blocks (CAZT) category in the Fire Resistance Directory for names of manufacturers.
2. Joint System — Max separation between edge of floor and face of wall (at time of installation of joint system) is 2 in. The joint system is designed to accommodate a max 12.5 percent compression or extension from its installed width. The joint system shall consist of the following:
   A. Forming Material — Min 4 pcf mineral wool batt insulation installed in joint opening as a permanent form. Pieces of batt cut to min width of 5 in. and installed edge-first into joint opening, parallel with joint direction, such that batt sections are compressed min 50 percent in thickness and that the compressed batt sections are recessed a min 1/2 in. from both surfaces of the wall as required to accommodate the required thickness of fill material. Adjoining lengths of batt to be tightly-butted with butted seams spaced min 24 in. apart along the length of the joint.
   THERMAFIBER INC — Type SAF
   B. Fill, Void or Cavity Material* - Sealant — Min 1/2 in. thickness of fill material applied within the joint, flush with both surfaces of wall.
   HILTI CONSTRUCTION CHEMICALS, DIV OF HILTI INC — CP601S Elastomeric Firestop Sealant or CFS-S SIL GG Sealant

*Bearing the UL Classification Mark

Hilti Firestop Systems

Reproduced by HILTI, Inc. Courtesy of
Underwriters Laboratories, Inc.
December 23, 2013

Classified by
Underwriters Laboratories, Inc.
to UL 2079 and CAN/ULC-S115

System No. WW-D-1080

Assembly Rating — 2 Hr
Nominal Joint Width — 3 In.
Class II Movement Capabilities —17% Compression Or Extension
L Rating at Ambient — Less than 1 CFM/Lin Ft
L Rating at 400 F — Less than 1 CFM/Lin Ft

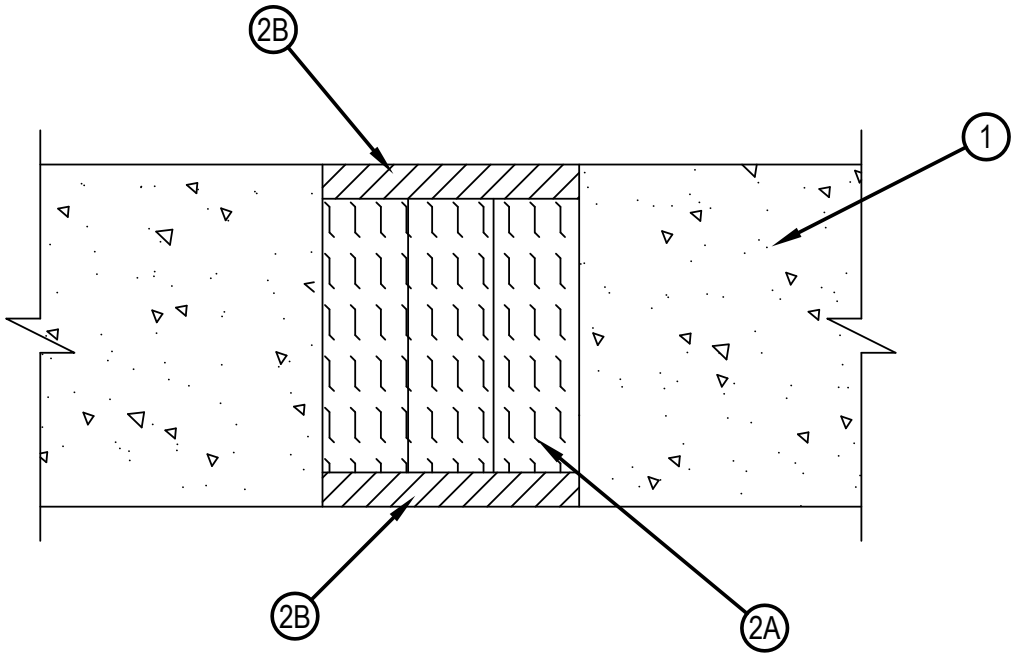

1. Wall Assembly — Min 4-1/2 in. (114 mm) thick reinforced lightweight or normal weight (100-150 pcf or 1600-2400 kg/m3) structural concrete. Wall may also be constructed of any UL Classified Concrete Blocks*.
   See Concrete Blocks (CAZT) category in the Fire Resistance Directory for names of manufacturers.
2. Joint System — Max width of joint (at time of installation of joint system) is 3 in. (76 mm). The joint system is designed to accommodate a max 17 percent in compression or extension from its installed width. The joint system shall consist of the following:
   A. Forming Material — Min 4 pcf (64 kg/m3) mineral wool batt insulation installed in joint opening as a permanent form. Pieces of batt cut to min width of 4 in. (102 mm) and installed edge-first into joint opening, parallel with joint direction, such that batt sections are compressed min 40 percent in thickness and that the compressed batt sections are recessed from both surfaces of the wall as required to accommodate the required thickness of fill material. Adjoining lengths of batt to be tightly-butted with butted seams spaced min 24 in. (610 mm) apart along the length of the joint.
   FIBREX INSULATIONS INC — FBX Safing Insulation
   B. Fill, Void or Cavity Material* — Sealant — Min 1/4 in. (6 mm) thickness of fill material applied within the joint, flush with both surfaces of wall.
   HILTI CONSTRUCTION CHEMICALS, DIV OF
   HILTI INC — CP606 Flexible Firestop Sealant

*Bearing the UL Classification Mark

Hilti Firestop Systems

Reproduced by HILTI, Inc. Courtesy of
Underwriters Laboratories, Inc.
July 13, 2009

Classified by
Underwriters Laboratories, Inc.
to UL 2079 and CAN/ULC-S115

System No. HW-D-0042

ANSI/UL2079	CAN/ULC S115
Assembly Ratings — 1 and 2 Hr (See Items 2 and 3A)	F Ratings — 1 and 2 Hr (See Items 2 and 3A)
Nominal Joint Width - 1 In.	FT Ratings — 1 and 2 Hr (See Items 2 and 3A)
Class II Movement Capabilities — 50% Compression or Extension	FH Ratings — 1 and 2 Hr (See Items 2 and 3A)
L Rating At Ambient — Less Than 1 CFM/Lin Ft	FTH Ratings — 1 and 2 Hr (See Items 2 and 3A)
L Rating At 400°F — Less Than 1 CFM/Lin Ft	Nominal Joint Width - 1 In.
	Class II Movement Capabilities — 50% Compression or Extension
	L Rating At Ambient — Less Than 1 CFM/Lin Ft
	L Rating At 400°F — Less Than 1 CFM/Lin Ft

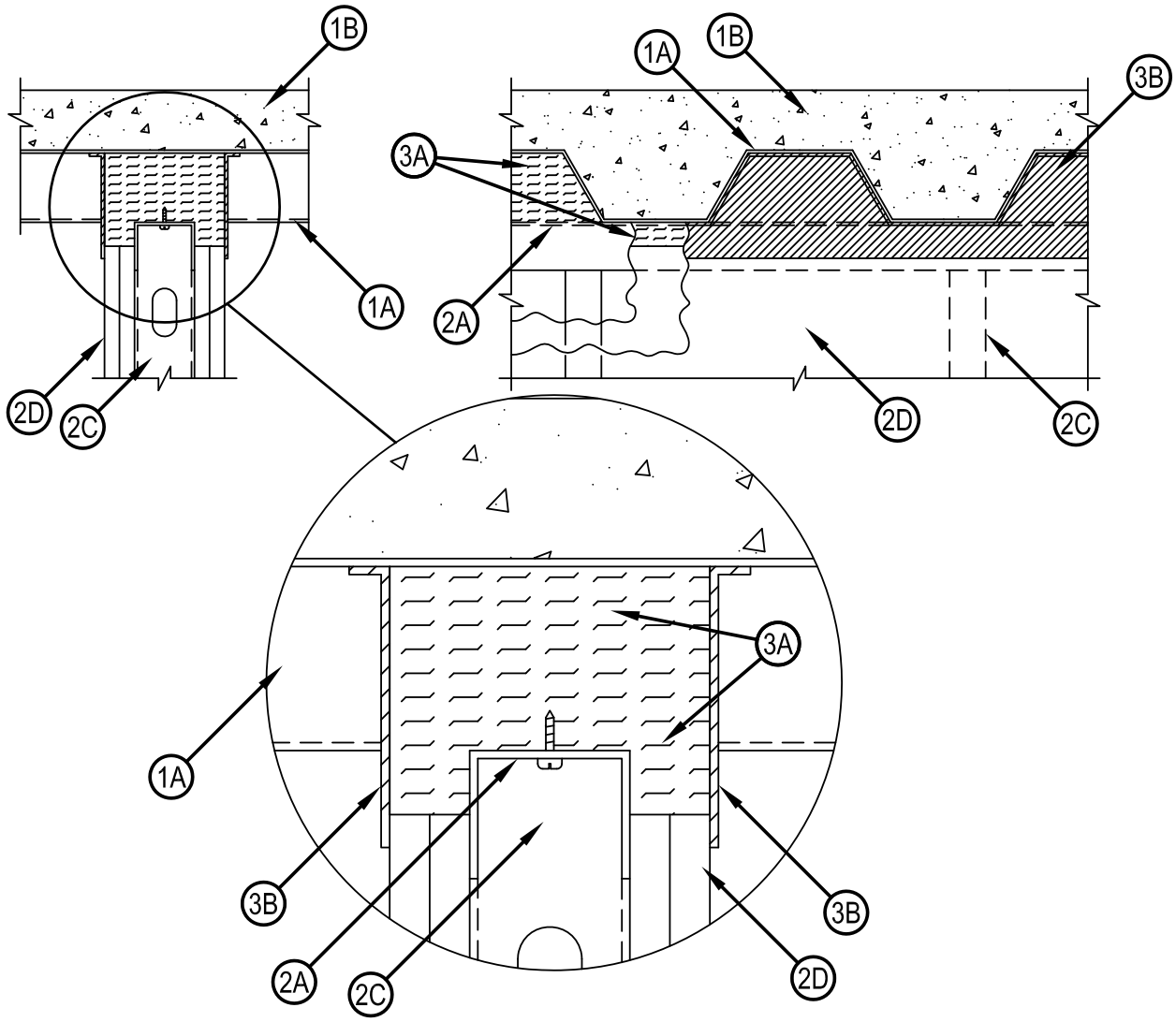

Hilti Firestop Systems

Reproduced by HILTI, Inc. Courtesy of
Underwriters Laboratories, Inc.
September 26, 2013

1. Floor Assembly — The fire-rated fluted steel deck/concrete floor assembly shall be constructed of the materials and in the manner described in the individual D700 or D900 Floor-Ceiling Design in the UL Fire Resistance Directory and shall include the following construction features:
   A. Steel Floor And Form Units* — Max 3 in. (76 mm) deep galv steel fluted units.
   B. Concrete — Min 2-1/2 in. (64 mm) thick reinforced concrete, as measured from the top plane of the floor units.
   C. Spray-Applied Fire Resistive Materials* — (Optional, Not Shown)—Prior to or after the installation of the steel ceiling runners, Forming Material and Fill, Void or Cavity Material (Items 2A, 3A, 3B, respectively) the steel floor units may be sprayed with a min 5/16 in. (8 mm) to max 1-3/4 in. (45 mm) thickness of fire resistive material.
      W R GRACE & CO - CONN — Type MK-6-HY
      ISOLATEK INTERNATIONAL — Type 300

1A. Roof Assembly — (Not Shown) — As an alternate to the floor assembly, a fire rated fluted steel deck roof assembly may be used. The roof assembly shall be constructed of the materials and in the manner described in the individual P900 Series Roof-Ceiling Design in the UL Fire Resistance Directory. The hourly rating of the roof assembly shall be equal to or greater than the hourly rating of the wall assembly. The roof assembly shall include the following construction features:
   A. Steel Roof Deck — Max 3 in. (76 mm) deep galv steel fluted roof deck.
   B. Roof Insulation — Min 2-1/4 in. (57 mm) thick poured insulating concrete, as measured from the top plane of the floor units.

1B. Roof Assembly — As an alternate to Items 1 and 1A, a fire rated protected fluted steel deck roof assembly may be used. The roof assembly shall be constructed of the materials and in the manner described in the individual P700 Series Roof-Ceiling Design in the UL Fire Resistance Directory. The hourly rating of the roof assembly shall be equal to or greater than the hourly rating of the wall assembly. The roof assembly shall include the following construction features:
   A. Steel Roof Deck — Max 3 in. (76 mm) deep galv steel fluted roof deck.
   B. Spray—Applied Fire Resistive Materials* — (Not Shown)—Prior to or after the installation of the steel ceiling runners, Forming Material and Fill, Void or Cavity Material (Items 2A, 3A, 3B), the roof assembly shall be sprayed with the type and thickness of fire resistive material indicated in the individual P700 Series design.
      W R GRACE & CO - CONN — Type MK-6-HY
      ISOLATEK INTERNATIONAL — Type 300

2. Wall Assembly — The 1 or 2 hr fire rated gypsum board/steel stud wall assembly shall be constructed of the materials and in the manner described in the individual U400 or V400 Series Wall and Partition Design in the UL Fire Resistance Directory and shall include the following construction features:
   A. Steel Floor And Ceiling Runners — Floor and ceiling runners of wall assembly shall consist of galv steel channels sized to accommodate steel studs (Item 2C). Flange height of ceiling runner shall be min 1/4 in. (6 mm) greater than max extended joint width. Ceiling runner installed perpendicular to direction of fluted steel deck and secured to valleys with steel masonry anchors, steel fasteners or welds spaced max 24 in. (610 mm) OC. before or after optional spray-applied fire resistive material is used. The use of welds to secure the ceiling runner may only be used prior to the installation of the optional spray-applied material.
   A1. Light Gauge Framing*-Slotted Ceiling Runner — As an alternate to the ceiling runner in Item 2A, slotted ceiling runner to consist of galv steel channel with slotted flanges sized to accommodate steel studs (Item 2C). Slotted ceiling runner installed perpendicular to direction of fluted steel deck and secured to valleys with steel fasteners or welds spaced max 24 in. (610 mm) OC before optional spray-applied fire resistive material is used. Ceiling runner installed perpendicular to direction of fluted steel deck and secured to valleys with steel masonry anchors, steel fasteners or welds spaced max 24 in. (610 mm) OC. before or after optional spray-applied fire resistive material is used. The use of welds to secure the ceiling runner may only be used prior to the installation of the optional spray-applied material.
      BRADY CONSTRUCTION INNOVATIONS INC, DBA SLIPTRACK SYSTEMS — SLP-TRK
      CALIFORNIA EXPANDED METAL PRODUCTS CO — CST
      CLARKDIETRICH BUILDING SYSTEMS — Type SLT, SLT-H
      CONSOLIDATED FABRICATORS CORP, BUILDING PRODUCTS DIV — SDT250, SDT300
      MARINO/WARE, DIV OF WARE INDUSTRIES INC — Type SLT
      METAL-LITE INC — The System
      OLMAR SUPPLY INC — STT250, STT300
      R & P SUPPLY — SCT250, SCT300
      SCAFCO STEEL STUD MANUFACTURING CO
      TELLING INDUSTRIES L L C — True-Action Deflection Track

Reproduced by HILTI, Inc. Courtesy of
Underwriters Laboratories, Inc.
September 26, 2013

Customer Hotline: Hong Kong 8228 8118, Macau 00800 8228 8118 Email: hksales@hilti.com

A2. Light Gauge Framing*-Vertical Deflection Ceiling Runner — When the nom joint width is less than or equal to 3/4 in. (19 mm), vertical deflection ceiling runner may be used as an alternate to the ceiling runners in Items 2A and 2A1. Vertical deflection ceiling runner to consist of galv steel channel with slotted vertical deflection clips mechanically fastened within runner. Slotted clips provided with step bushings for permanent fastening of steel studs. Flanges sized to accommodate steel studs (Item 2C). Vertical deflection ceiling runner installed perpendicular to direction of fluted steel deck and secured to valleys with steel masonry anchors, steel fasteners or welds spaced max 24 in. (610 mm) OC. before or after optional spray-applied fire resistive material is used. The use of welds to secure the ceiling runner may only be used prior to the installation of the optional spray-applied material.

THE STEEL NETWORK INC — VertiTrack VTD250, VTD362, VTD400, VTD600 and VTD800

A3. Light Gauge Framing*- Notched Ceiling Runner — As an alternate to the ceiling runners in Items 2A through 2A3, notched ceiling runners to consist of C-shaped galv steel channel with notched return flanges sized to accommodate steel studs (Item 2C). Notched ceiling runner installed perpendicular to direction of fluted steel deck and secured to valleys with steel masonry anchors, steel fasteners or welds spaced max 24 in. (610 mm) OC. before or after optional spray-applied fire resistive material is used. The use of welds to secure the ceiling runner may only be used prior to the installation of the optional spray-applied material.

OLMAR SUPPLY INC — Type SCR

B. Steel Attachment Clips — (Optional - Not Shown) - When spray applied fireproofing is used ceiling runner may be secured to deck with Z-shaped clips formed from min 1 in. (25 mm) long strips of min 20 ga galv steel. Length of clips should not exceed the width (thickness) of the wall. Clips to be sized to extend through the thickness of the spray-applied fire-resistive material on the bottom of the steel deck with 1-1/2 or 2 in. (38 or 51 mm) long upper and lower legs. Legs of clips fastened to valleys of steel deck (prior to application of spray-applied fire-resistive materials) and top of ceiling runner with steel masonry anchors, steel fasteners or welds. Clips spaced max 24 in. (610 mm) OC.

C. Studs — Steel studs to be min 2-1/2 in. (64 mm) wide. Studs cut 1/2 to 3/4 in. (13 to 19 mm) less in length than assembly height with bottom nesting in and resting on floor runner and with top nesting in ceiling runner without attachment. When slotted ceiling runner (Item 2A1) is used, steel studs secured to slotted ceiling runner with No. 8 by 1/2 in. (13 mm) long wafer head steel screws at midheight of slot on each side of wall. When vertical deflection ceiling runner (Item 2A2) is used, steel studs secured to slotted vertical deflection clips, through the bushings, with steel screws at midheight of each slot. Stud spacing not to exceed 24 in. (610 mm) OC.

D. Gypsum Board* — Gypsum board installed to a min total thickness of 5/8 in. and 1-1/4 in. (16 and 32 mm) on each side of wall for 1 and 2 hr rated assemblies, respectively. Wall to be constructed as specified in the individual Wall and Partition Design in the UL Fire Resistance Directory, except that a max 1 in. (25 mm) gap shall be maintained between the top of the gypsum board and the bottom of the steel deck units and the top row of screws shall be installed into the studs 1-1/2 to 2 in. (38 to 51 mm) below the bottom of the ceiling runner. The hourly rating of the joint system is dependent on the hourly rating of the wall.

3. Joint System — Max separation between bottom of floor or roof and top of wall at time of installation of joint system is 1 in. (13 mm). The joint system is designed to accommodate a max 50 percent compression or extension from its installed width. The joint system consists of forming material and a fill material, as follows:

A. Forming Material* — Nom 4 pcf (64 kg/m3) density mineral wool batt insulation cut with a length approx equal to the overall thickness of the wall. Multiple pieces stacked on top of each other, as needed, and then compressed 25 percent in thickness and inserted into the flutes of the steel deck above the top of the ceiling runner. The mineral wool batt insulation is to project beyond each side of the ceiling runner, flush with wall surfaces. Alternately, nom 4 pcf (64 kg/m3) forming material cut to shape of flute and nom 1 in. (25 mm) longer than thickness of wall; mineral wool compressed from ends and firmly packed into each flute to attain a min compression rate of 14.3 percent in the length (wall thickness) direction to be flush with both wall surfaces. Additional 5/8 in. and 1-1/4 in. (16 and 32 mm) wide strips for 1 and 2 hr rated assemblies, respectively, of nom 4 pcf (64 kg/m3) mineral wool batt insulation are to be cut to fill the gap between the top of the gypsum board and bottom of the steel deck. The strips of mineral wool are compressed 50 percent and tightly packed, cut edge first, into the gap between the top of the gypsum board and bottom of the steel deck on both sides of the wall.

ROCK WOOL MANUFACTURING CO — Delta- Board
ROXUL INC — SAFE
THERMAFIBER INC — Type SAF
IIG MINWOOL L L C — MinWool-1200 Safing

A1. Forming Material*—Plugs — (Optional, Not Shown) Preformed mineral wool plugs, formed to the shape of the fluted floor units, friction fit to completely fill the flutes above the ceiling channel. The plugs shall project beyond each side of the ceiling runner, flush with wall surfaces. Additional forming material, described in Item 3A, to be used in conjunction with the plugs to fill the gap between the top of gypsum board and bottom of steel floor units.

HILTI CONSTRUCTION CHEMICALS, DIV OF HILTI INC — CP777 Speed Plugs

A2. Forming Material* - Strips — (Optional) - Nom 5/8 in. and 1-1/4 in. (16 and 32 mm) wide by 2 in. (51 mm) high precut mineral wool strips for 1 and 2 hr rated assemblies respectively. The strips are compressed 50 percent and firmly packed, cut edge first, into the gap between the top of the gypsum board and bottom of the steel floor units on both sides of the wall.

HILTI CONSTRUCTION CHEMICALS, DIV OF HILTI INC — CP 767 Speed Strips

B. Fill, Void or Cavity Material* — Min 1/16 in. (1.6 mm) dry thickness (1/8 in. or 3.2 mm wet thickness) of fill material sprayed or troweled on each side of the wall to completely cover mineral wool forming material and to overlap a min of 1/2 in. (13 mm) onto gypsum board and steel deck on both sides of wall. When Spray-Applied Fire Resistive Material* is applied to the Steel Floor and Form Units*, the fill material is to overlap the gypsum board a min of 1/2 in. (13 mm) and the Spray-Applied Fire Resistive Material a min of 2 in. (51 mm) on both sides of wall. When spray-applied fire resistive materials are used, the firestop joint spray shall overlap the wall a min 1/2 in. (13 mm) and overlap the spray-applied fire resistive material a min of 2 in. (51 mm) on both sides of the wall.

HILTI CONSTRUCTION CHEMICALS, DIV OF HILTI INC — CFS-SP WB Firestop Joint Spray

*Bearing the UL Classification Mark

Classified by
Underwriters Laboratories, Inc.
to UL 2079 and CAN/ULC-S115

System No. HW-D-0049

Assembly Ratings — 1 and 2 Hr (See Items 2 and 3B)
Nominal Joint Width — 1 In.
Class II Movement Capabilities — 50% Compression Or Extension
L Rating At Ambient — Less Than 1 CFM/Lin Ft
L Rating At 400°F — Less Than 1 CFM/Lin Ft

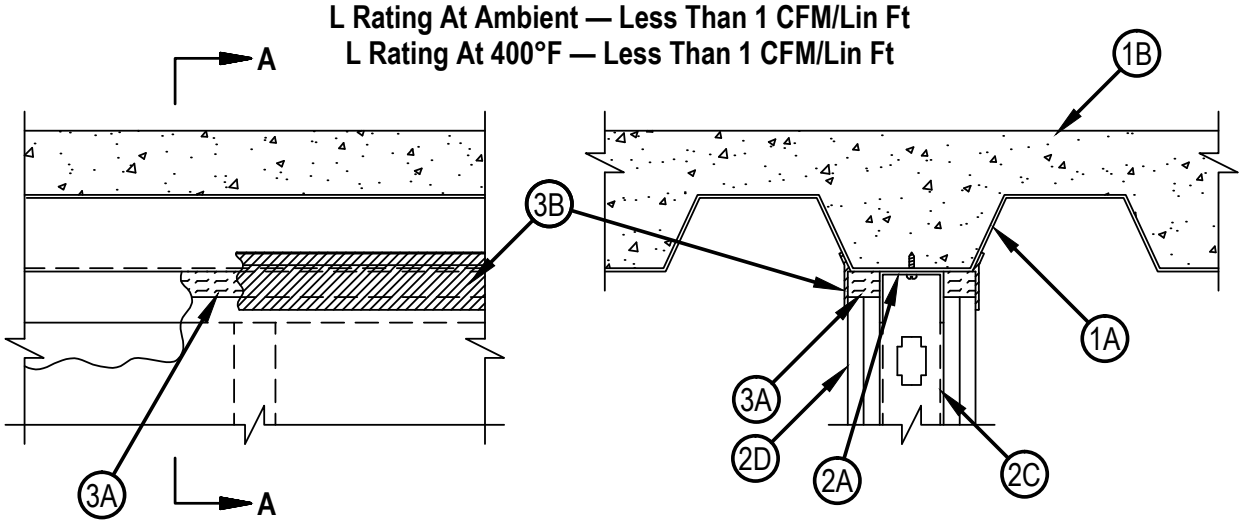

SECTION A-A

1. Floor Assembly — The fire-rated fluted steel deck/concrete floor assembly shall be constructed of the materials and in the manner described in the individual D700 or D900 Series Floor-Ceiling Design in the UL Fire Resistance Directory and shall include the following construction features:
   A. Steel Floor And Form Units* — Max 3 in. (76 mm) deep galv steel fluted units.
   B. Concrete — Min 2-1/2 in. (64 mm) thick reinforced concrete, as measured from the top plane of the floor units.
   C. Spray-Applied Fire Resistive Materials* — (Optional) - (Not Shown)—Prior to or after the installation of the steel ceiling runners, Forming Material and Fill, Void or Cavity Material (Items 2A, 3A, 3B) the steel floor units may be sprayed with a min 5/16 in. (8 mm) to max 1-3/4 in. (44 mm) thickness of fire resistive material.
   W R GRACE & CO - CONN — Type MK-6-HY
   ISOLATEK INTERNATIONAL — Type 300

1A. Roof Assembly — (Not Shown) — As an alternate to the floor assembly, a fire rated fluted steel deck roof assembly may be used. The roof assembly shall be constructed of the materials and in the manner described in the individual P900 Series Roof-Ceiling Design in the UL Fire Resistance Directory. The hourly rating of the roof assembly shall be equal to or greater than the hourly rating of the wall assembly. The roof assembly shall include the following construction features:
   A. Steel Roof Deck — Max 3 in. (76 mm) deep galv steel fluted roof deck.
   B. Roof Insulation — Min 2-1/4 in. (57 mm) thick poured insulating concrete, as measured from the top plane of the floor units.

1B. Roof Assembly — As an alternate to Items 1 and 1A, a fire rated protected fluted steel deck roof assembly may be used. The roof assembly shall be constructed of the materials and in the manner described in the individual P700 Series Roof-Ceiling Design in the UL Fire Resistance Directory. The hourly rating of the roof assembly shall be equal to or greater than the hourly rating of the wall assembly. The roof assembly shall include the following construction features:
   A. Steel Roof Deck — Max 3 in. (76 mm) deep galv steel fluted roof deck.
   B. Spray—Applied Fire Resistive Materials* — (Not Shown)—Prior to or after the installation of the steel ceiling runners, Forming Material and Fill, Void or Cavity Material (Items 2A, 3A, 3B), the roof assembly shall be sprayed with the type and thickness of fire resistive material indicated in the individual P700 Series design.
   W R GRACE & CO - CONN — Type MK-6-HY
   ISOLATEK INTERNATIONAL — Type 300

Reproduced by HILTI, Inc. Courtesy of
Underwriters Laboratories, Inc.
August 26, 2013

2. Wall Assembly — The 2 hr fire rated gypsum board /steel stud wall assembly shall be constructed of the materials and in the manner described in the individual U400 or V400 Series Wall and Partition Design in the UL Fire Resistance Directory and shall include the following construction features:

A. Steel Floor And Ceiling Runners — Floor and ceiling runners of wall assembly shall consist of min 25 ga galv steel channels sized to accommodate steel studs (Item 2C). Flange height of ceiling runner shall be min 1/4 in. (6 mm) greater than max extended joint width. Ceiling runner installed parallel to direction of fluted steel deck, centered beneath valley, and secured with steel masonry anchors, steel fasteners or welds spaced max 24 in. (610 mm) OC. before or after optional spray-applied fire resistive material is used. The use of welds to secure the ceiling runner may only be used prior to the installation of the optional spray-applied material.

A1. Light Gauge Framing*-Slotted Ceiling Runner — As an alternate to the ceiling runner in Item 2A, slotted ceiling runner to consist of galv steel channel with slotted flanges sized to accommodate steel studs (Item 2C). Slotted ceiling runner installed parallel to direction of fluted steel deck, centered beneath valley, and secured with steel masonry anchors, steel fasteners or welds spaced max 24 in. (610 mm) OC. before or after optional spray-applied fire resistive material is used. The use of welds to secure the ceiling runner may only be used prior to the installation of the optional spray-applied material.

BRADY CONSTRUCTION INNOVATIONS INC, DBA SLIPTRACK SYSTEMS — SLP-TRK
CALIFORNIA EXPANDED METAL PRODUCTS CO — CST
CLARKDIETRICH BUILDING SYSTEMS — Type SLT, SLT-H
MARINO/WARE, DIV OF WARE INDUSTRIES INC — Type SLT
METAL-LITE INC — The System
SCAFCO STEEL STUD MANUFACTURING CO
STEELER INC — Steeler Slotted Ceiling Runner
TELLING INDUSTRIES L L C — True-Action Deflection Track

A2. Light Gauge Framing*-Vertical Deflection Ceiling Runner — As an alternate to the ceiling runners in Items 2A and 2A1, vertical deflection ceiling runner to consist of galv steel channel with slotted vertical deflection clips mechanically fastened within runner. Slotted clips, provided with step bushings, for permanent fastening of steel studs. Flanges sized to accommodate steel studs (Item 2C). Vertical deflection ceiling runner installed parallel to direction of fluted steel deck, centered beneath deck, and secured with steel masonry anchors, steel fasteners or welds spaced max 24 in. (610 mm) OC. before or after optional spray-applied fire resistive material is used. The use of welds to secure the ceiling runner may only be used prior to the installation of the optional spray-applied material.

THE STEEL NETWORK INC — VertiTrack VTD250, VTD362, VTD400, VTD600 and VTD800

A3. Light Gauge Framing —Floor and Ceiling Runners — As an alternate to the ceiling and floor runners in Item 2A, 2A1, 2A2 and 2A3, floor and ceiling runners to consist of galv steel channel sized to accommodate the Light Gauge Framing* Slotted Stud (Item 2C1) or Light Gauge Framing* Slider C-Clip System (Item 2C2). Floor and ceiling runners to be provided with min 1-1/4 in. (32 mm) and 3 in. (76 mm) flanges, respectively. Ceiling runner installed parallel to direction of fluted steel deck, centered beneath deck, and secured with steel masonry anchors, steel fasteners or welds spaced max 24 in. (610 mm) OC. before or after optional spray-applied fire resistive material is used. The use of welds to secure the ceiling runner may only be used prior to the installation of the optional spray-applied material.

STEELER INC — Floor and Ceiling Runners

A4. Light Gauge Framing*- Notched Ceiling Runner — As an alternate to the ceiling runners in Items 2A through 2A4, notched ceiling runners to consist of C-shaped galv steel channel with notched return flanges sized to accommodate steel studs (Item 2C). Notched ceiling runner installed parallel to direction of fluted steel deck, centered beneath valley, and secured with steel masonry anchors, steel fasteners or welds spaced max 24 in. (610 mm) OC. before or after optional spray-applied fire resistive material is used. The use of welds to secure the ceiling runner may only be used prior to the installation of the optional spray-applied material.

OLMAR SUPPLY INC — Type SCR

B. Steel Attachment Clips — (Optional - Not Shown) - When spray applied fireproofing is used ceiling runner may be secured to deck with Z-shaped clips formed from min 1 in. (25 mm) long strips of min 20 ga galv steel. Length of clips should not exceed the width (thickness) of the wall. Clips to be sized to extend through the thickness of the spray-applied fire-resistive material on the bottom of the steel deck with 1-1/2 or 2 in. (38 or 51 mm) long upper and lower legs. Legs of clips fastened perpendicular to valleys of steel deck (prior to application of spray-applied fire-resistive materials) and top of ceiling runner with steel fasteners or welds. Clips spaced max 24 in. (610 mm) OC.

Reproduced by HILTI, Inc. Courtesy of
Underwriters Laboratories, Inc.
August 26, 2013

Customer Hotline: Hong Kong 8228 8118, Macau 00800 8228 8118 Email: hksales@hilti.com

C. Studs — Steel studs to be min 2-1/2 in. (64 mm) wide. Studs cut 1/2 to 3/4 in. (13 to 19 mm) less in length than assembly height with bottom nesting in and resting on floor runner and with top nesting in ceiling runner without attachment. When slotted ceiling runner (Item 2A1) is used, steel studs secured to slotted ceiling runner with No. 8 by 1/2 in. (13 mm) long wafer head steel screws at midheight of slot on each side of wall. Stud spacing not to exceed 24 in. (610 mm) OC. When vertical deflection ceiling runner (Item 2A2) is used, steel studs secured to slotted vertical deflection clips, through the bushings, with steel screws at midheight of each slot. Stud spacing not to exceed 24 in. (610 mm) OC.

C1. Light Gauge Framing* —Slotted Studs — Slotted steel stud to be used in conjunction with Light Gauge Framing* —Floor and Ceiling Runners (Item 2A4). Slotted steel studs to be min 2-1/2 in. (64 mm) wide. Slotted steel studs cut 1 in. less in length than assembly height with bottom nesting in and secured to both ceiling and floor runners. Ceiling runner secured to preformed slot within steel stud by means of No. 10 by 3/4 in. (19 mm) long low profile head steel screw. Floor runner attached to bottom of steel stud by means of No. 8 by 1/2 in. (13 mm) long pan head steel screw. Slotted steel stud spacing not to exceed 24 in. (610 mm) OC.

STEELER INC — Slotted Stud

C2. Light Gauge Framing* —Slider C-Clip System — As an alternate to the Light Gauge Framing* —Slotted Steel Studs (Item 2C1), a Slider C-Clip System consisting of a C shaped steel clip with a slotted opening and a steel stud to be used in conjunction with Light Gauge Framing —Floor and Ceiling Runners (Item 2A4). Steel clips and studs to be min 2-1/2 in. (64 mm) wide. Steel clip inserted into inside flange of steel stud without attachment. Total length of steel stud cut 1 in. (25 mm) less than assembly height with bottom of steel stud nesting in and secured to floor runner. Floor runner attached to bottom of steel stud by means of No. 8 by 1/2 in. (13 mm) long pan head steel screw. Ceiling runner secured to steel C-Clip by means of No. 10 by 3/4 in. (19 mm) long pan head steel screw located 3/8 in. (10 mm) below top of ceiling runner. Top row of gypsum board screws shall be centered within the preformed slot of the C-Clip. Steel stud and steel clips spacing not to exceed 24 in. (610 mm) OC.

STEELER INC — Slider C Clip System

D. Gypsum Board* — Gypsum board installed to a min total thickness of 5/8 in. (16 mm) and 1-1/4 in. (32 mm) on each side of wall for 1 and 2 Hr rated assemblies respectively. Wall to be constructed as specified in the individual Wall and Partition Design in the UL Fire Resistance Directory, except that a nom 1 in. (25 mm) gap shall be maintained between the top of the gypsum board and the bottom of the steel floor units and the top row of screws shall be installed into the studs 1-1/2 (38 mm) to 2 in. (51 mm) below the bottom of the ceiling runner. The hourly rating of the joint system is equal to the hourly fire rating of the wall.

3. Joint System — Max separation between bottom of floor and top of wall at time of installation of joint system is 1 in. (25 mm). The joint system is designed to accommodate a max 50 percent compression or extension from its installed width. The joint system consists of forming material and a fill material, as follows:

A. Forming Material* — Nom 5/8 in. (16 mm) and 1-1/4 in. (32 mm) wide strips of min 4 pcf (64 kg/m3) mineral wool batt insulation for 1 and 2 hr rated assemblies respectively, cut to thickness, compressed 50 percent in thickness and firmly packed into the gap between the top of the gypsum board and bottom of the steel floor units on both sides of the wall.

ROCK WOOL MANUFACTURING CO — Delta- Board

ROXUL INC — SAFE

THERMAFIBER INC — Type SAF

IIG MINWOOL L L C — MinWool-1200 Safing

A1. Forming Material* - Strips — (Optional) - Nom 5/8 in. (16 mm) and 1-1/4 in. (32 mm) wide precut mineral wool strips for 1 and 2 hr rated assemblies respectively. The strips are compressed 50 percent in thickness and firmly packed into the gap between the top of the gypsum board and bottom of the steel floor units on both sides of the wall.

HILTI CONSTRUCTION CHEMICALS, DIV OF HILTI INC — CP 767 Speed Strips

B. Fill, Void or Cavity Material* — Min 1/16 in. (1.6 mm) dry thickness (min 1/8 in. or 3.2 mm wet thickness) of fill material sprayed or troweled on each side of the wall to completely cover mineral wool forming material and to overlap a min of 1/2 in. (13 mm) onto gypsum board and steel deck on both sides of wall. When spray-applied fire resistive material is applied to the steel floor and form units, the fill material is to overlap the gypsum board a min of 1/2 in. (13 mm) and the spray-applied fire resistive material a min of 2 in. (51 mm) on both sides of wall. When spray-applied fire resistive materials are used, the joint spray shall overlap the wall a min 1/2 in. (13 mm) and overlap the spray-applied fire resistive material a min of 2 in. (51 mm) on both sides of the wall.

HILTI CONSTRUCTION CHEMICALS, DIV OF HILTI INC — CFS-SP WB Firestop Joint Spray

*Bearing the UL Classification Mark

Underwriters Laboratories, Inc.
to UL 2079 and CAN/ULC-S115

System No. HW-D-0184

ANSI/UL2079	CAN/ULC S115
Assembly Ratings — 1 and 2 Hr (See Item 2)	F Ratings — 1 and 2 Hr (See Item 2)
Nominal Joint Width - 3/4 In.	FT Ratings — 1 and 2 Hr (See Item 2)
Class II Movement Capabilities — 17% Compression or Extension	FH Ratings — 1 and 2 Hr (See Item 2)
L Rating At Ambient — Less Than 1 CFM/sq ft	FTH Ratings — 1 and 2 Hr (See Item 2)
L Rating At 400 F — Less Than 1 CFM/sq ft	Nominal Joint Width - 3/4 In.
	Class II Movement Capabilities — 17% Compression or Extension
	L Rating At Ambient — Less Than 1 CFM/sq ft
	L Rating At 400 F — Less Than 1 CFM/sq ft

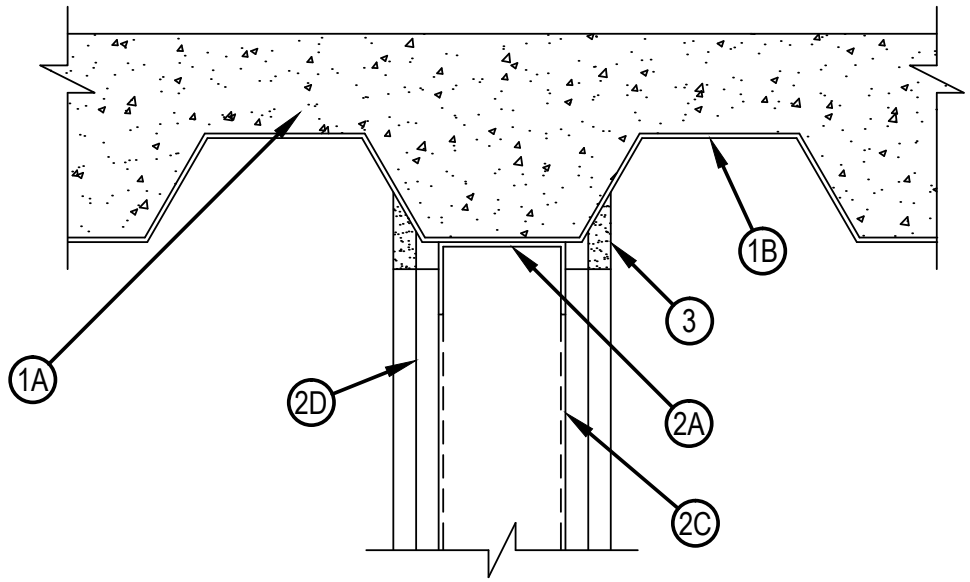

Hilti Firestop Systems

Reproduced by HILTI, Inc. Courtesy of
Underwriters Laboratories, Inc.
December 23, 2013

System No. HW-D-0184

1. Floor Assembly — The fire-rated fluted steel floor unit/concrete floor assembly shall be constructed of the materials and in the manner described in the individual D700 or D900 Series Floor-Ceiling Design in the UL Fire Resistance Directory and shall include the following construction features:
   A. Steel Floor and Form Units* — Max 3 in. (76 mm) deep galv steel fluted units.
   B. Concrete — Min 2-1/2 in. (64 mm) thick reinforced concrete, as measured from the top plane of the floor units.
   C. Spray-Applied Fire Resistive Materials (Optional) — (Not Shown) — Prior to or after the installation of the ceiling runner and prior to the installation of the Fill, Void or Cavity Materials (Items 2A and 3), the steel floor units may be sprayed with a min 5/16 in. (8 mm) thickness to a max 11/16 in. (17 mm) thickness of fire resistive material.
   W R GRACE & CO - CONN Type MK-6/HY

1A. Roof Assembly — (Not Shown) — As an alternate to the floor assembly, a fire rated fluted steel deck roof assembly may be used. The roof assembly shall be constructed of the materials and in the manner described in the individual P900 Series Roof-Ceiling Design in the UL Fire Resistance Directory. The hourly rating of the roof assembly shall be equal to or greater than the hourly rating of the wall assembly. The roof assembly shall include the following construction features:
   A. Steel Roof Deck — Max 3 in. (76 mm) deep galv steel fluted roof deck.
   B. Roof Insulation — Min 2-1/4 in. (57 mm) thick poured insulating concrete, as measured from the top plane of the floor units.

1B. Roof Assembly — As an alternate to Items 1 and 1A, a fire rated protected fluted steel deck roof assembly may be used. The roof assembly shall be constructed of the materials and in the manner described in the individual P700 Series Roof-Ceiling Design in the UL Fire Resistance Directory. The hourly rating of the roof assembly shall be equal to or greater than the hourly rating of the wall assembly. The roof assembly shall include the following construction features:
   A. Steel Roof Deck — Max 3 in. (76 mm) deep galv steel fluted roof deck.
   B. Spray—Applied Fire Resistive Materials* — (Not Shown)—Prior to or after the installation of the steel ceiling runners, and prior to the installation of the Forming Material and Fill, Void or Cavity Material (Items 2A, 3A, 3B), the roof assembly shall be sprayed with the type and thickness of fire resistive material indicated in the individual P700 Series design.

2. Wall Assembly — The 1 or 2 hr fire rated gypsum board/steel stud wall assembly shall be constructed of the materials and in the manner described in the individual U400, V400 or W400 Series Wall and Partition Design in the UL Fire Resistance Directory and shall include the following construction features:
   A. Steel Floor and Ceiling Runners — Floor and ceiling runners of wall assembly shall consist of min No. 25 gauge galv steel channels sized to accommodate steel studs (Item 2C). Flange height of ceiling runner shall be min 1/4 in. (6 mm) greater than max extended joint width. Ceiling runner installed parallel to direction of fluted steel deck, centered beneath valley, and secured with steel masonry anchors, steel fasteners or welds spaced max 24 in. (610mm) OC before or after optional spray-applied fire resistive material is used. The use of welds to secure the ceiling runner may only be used prior to the installation of the optional spray-applied material.
   A1. Light Gauge Framing* - Slotted Ceiling Runner — As an alternate to the ceiling runner in (Item 2A), slotted ceiling runner to consist of galv steel channel with slotted flanges sized to accommodate steel studs (Item 2C). Ceiling runner installed parallel to direction of fluted steel deck, centered beneath valley, and secured with steel masonry anchors, steel fasteners or welds spaced max 24 in. (610mm) OC before or after optional spray-applied fire resistive material is used. The use of welds to secure the ceiling runner may only be used prior to the installation of the optional spray-applied material.
   BRADY CONSTRUCTION INNOVATIONS INC, DBA SLIPTRACK SYSTEMS — SLP-TRK
   CALIFORNIA EXPANDED METAL PRODUCTS CO — CST
   CLARKDIETRICH BUILDING SYSTEMS — Type SLT, SLT-H
   SCAFCO STEEL STUD MANUFACTURING CO
   TELLING INDUSTRIES L L C — True-Action Deflection Track
   THE STEEL NETWORK INC — VertiTrack VT, series,250VT, 362VT, 400VT, 600VT and 800VT
   A2. Light Gauge Framing* - Vertical Deflection Ceiling Runner — As an alternate to the ceiling runners in Items 2A and 2A1, vertical deflection ceiling runner to consist of galv steel channel with slotted vertical deflection clips mechanically fastened with runner. Slotted clip provided with step bushings for permanent fastening of steel studs. Flanges sized to accommodate steel studs (Item 2C). Vertical deflection ceiling runner installed parallel to direction of fluted steel deck, centered beneath valley, and secured with steel masonry anchors, steel fasteners or welds spaced max 24 in. (610mm) OC before or after optional spray-applied fire resistive material is used. The use of welds to secure the ceiling runner may only be used prior to the installation of the optional spray-applied material.
   THE STEEL NETWORK INC — VertiTrack VTD250, -362, -400, -600, -800

Reproduced by HILTI, Inc. Courtesy of
Underwriters Laboratories, Inc.
December 23, 2013

System No. HW-D-0184

A3. Light Gauge Framing*- Notched Ceiling Runner — As an alternate to the ceiling runners in Items 2A through 2A2, notched ceiling runners to consist of C-shaped galv steel channel with notched return flanges sized to accommodate steel studs (Item 2C). Notched ceiling runner installed parallel to direction of fluted steel deck, centered beneath valley, secured with steel masonry anchors, steel fasteners or welds spaced max 24 in. (610mm) OC before or after optional spray-applied fire resistive material is used. The use of welds to secure the ceiling runner may only be used prior to the installation of the optional spray-applied material.
OLMAR SUPPLY INC — Type SCR

B. Steel Attachment Clips — (Optional - Not Shown) - When spray applied fireproofing is used ceiling runner may be secured to deck with Z-shaped clips formed from min. 1 in. (25 mm) long strips of min 20 ga galv steel. Length of clips should not exceed the width (thickness) of the wall. Clips to be sized to extend through the thickness of the spray-applied fire-resistive material on the bottom of the steel deck with 1-1/2 or 2 in. (38 or 51 mm) long upper and lower legs. Legs of clips fastened to valleys of steel deck (prior to application of spray-applied fire-resistive materials) and top of ceiling runner with steel fasteners or welds. Clips spaced max 24 in. (610 mm) OC.

C. Studs — Steel studs to be min 3-5/8 in. (92 mm) wide. Studs cut 1/2 to 3/4 in. (13 to 19 mm) less in length than assembly height with bottom nesting in and resting on floor runner and with top nesting in ceiling runner without attachment. When slotted ceiling runner (Item 2A1) is used, steel studs secured to slotted ceiling runner with No. 8 by 1/2 in. (13 mm) long wafer head steel screws at midheight of slot on each side of wall. When vertical deflection ceiling runner (Item 2A2) is used, steel studs secured to slotted vertical deflection clips, through bushings, with steel screws at midheight of each slot. Stud spacing not to exceed 24 in. (610 mm) OC.

D. Gypsum Board* — For 1 hr assembly, one layer of 5/8 in. (16 mm) thick gypsum board is required in the individual Wall and Partition Design. For 2 hr assembly, two layers of 5/8 in. (16 mm) thick gypsum board is required in the individual Wall and Partition Design. For both hourly ratings, a nominal 3/4 in. (19 mm) gap shall be maintained between the top of the gypsum board and the bottom surface of the steel deck and the top row of screws shall be installed into the studs 3 in. (76 mm) below the valleys of the steel floor units.
The hourly fire rating of the joint system is equal to the hourly rating of the wall.

3. Fill, Void or Cavity Material* — Sealant - Max separation between bottom of floor or roof and top of wall is 3/4 in. (19 mm). The joint system is designed to accommodate a max 17 percent compression or extension from its installed width. Min 5/8 in. (16 mm) thickness of fill material installed on each side of the wall between the top of the gypsum board and the bottom of the steel deck, flush with each surface of wall.
HILTI CONSTRUCTION CHEMICALS, DIV OF HILTI INC — CP 601S Elastomeric Firestop Sealant or CP 606 Flexible Firestop Sealant or CFS-S SIL GG Sealant. L Ratings apply when CP 606 or CFS-S SIL GG Sealant is used.
4. Forming Material — (Optional, Not Shown) - Mineral wool insulation, fiberglass batt insulation or polyurethane/polyethylene foam backer rod. Forming material to be recessed from both surfaces of the 2 hr fire rated wall to accommodate the required thickness of fill material.

*Bearing the UL Classification Mark

Reproduced by HILTI, Inc. Courtesy of
Underwriters Laboratories, Inc.
December 23, 2013

Classified by Underwriters Laboratories, Inc. to UL 2079 and CAN/ULC-S115

System No. HW-D-0209

ANSI/UL2079	CAN/ULC S115
Assembly Ratings — 1 and 2 Hr (See Item 2)	F Ratings — 1 and 2 Hr (See Item 2)
Nominal Joint Width - 1 In.	FT Ratings — 1 and 2 Hr (See Item 2)
Class II Movement Capabilities — 19% Compression or Extension	FH Ratings — 1 and 2 Hr (See Item 2)
L Rating At Ambient — Less Than 1 CFM/sq ft (See Item 3)	FTH Ratings — 1 and 2 Hr (See Item 2)
L Rating At 400 F — Less Than 1 CFM/sq ft (See Item 3)	Nominal Joint Width - 1 In.
	Class II Movement Capabilities — 19% Compression or Extension
	L Rating At Ambient — Less Than 1 CFM/sq ft (See Item 3)
	L Rating At 400 F — Less Than 1 CFM/sq ft (See Item 3)

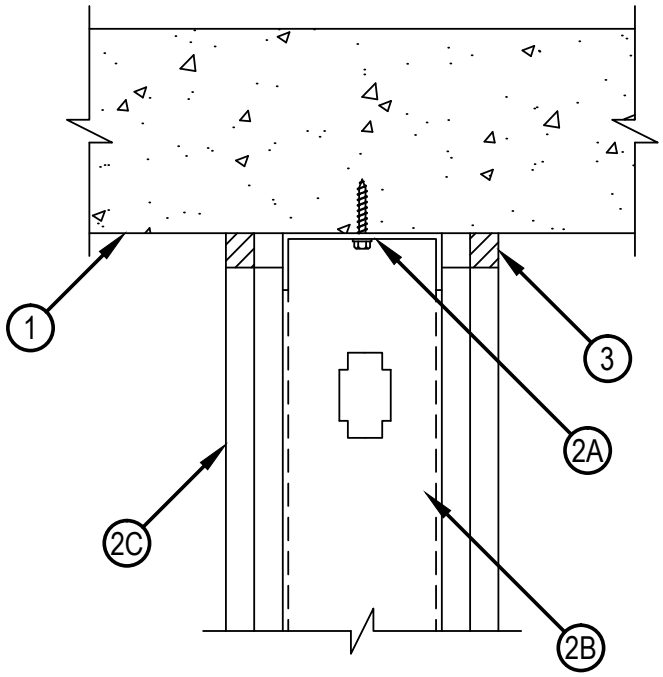

1. Floor Assembly — Min 4-1/2 in. (114 mm) thick reinforced lightweight or normal weight (100-150 pcf or 1600-2400 kg/m3) structural concrete. Floor may also be constructed of any 6 in. (152 mm) thick UL Classified hollow-core Precast Concrete Units*. See Precast Concrete Units category in the Fire Resistance Directory for names of manufactures.
2. Wall Assembly — The 1 or 2 h fire rated gypsum board/steel stud wall assembly shall be constructed of the materials and in the manner specified in the individual U400, V400 or W400 Series Wall and Partition Design in the UL Fire Resistance Directory and shall include the following construction features:
   A. Steel Floor and Ceiling Runners — Floor and ceiling runners of wall assembly shall consist of min No. 25 gauge galv steel channels sized to accommodate steel studs (Item 2B).Flange height of ceiling runner shall be min 1/4 in. (6 mm) greater than max extended joint width. Ceiling runner secured with masonry anchors or steel fasteners spaced 24 in. (610 mm) OC.

Reproduced by HILTI, Inc. Courtesy of Underwriters Laboratories, Inc.
December 23, 2013

System No. HW-D-0209

A1. Light Gauge Framing* — Slotted Ceiling Runner - As an alternate to the ceiling runner in Item 2A, slotted ceiling runner to consist of galv steel channel with slotted flanges sized to accommodate steel studs (Item 2B). Slotted ceiling runner secured to valleys lower surface of floor with steel fasteners spaced max 24 in. (610 mm) OC.
CALIFORNIA EXPANDED METAL PRODUCTS CO — CST
BRADY CONSTRUCTION INNOVATIONS INC, DBA SLIPTRACK SYSTEMS — SLP-TRK.
MARINO/WARE, DIV OF WARE INDUSTRIES INC — Type SLT

A2. Light Gauge Framing* — Vertical Deflection Ceiling Runner - As an alternate to the ceiling runners in Items 2A and 2A1, vertical deflection ceiling runner to consist of galv steel channel with slotted vertical deflection clips mechanically fastened within runner. Slotted clips provided with step bushings for permanent fastening of steel studs. Flanges sized to accommodate steel studs (Item 2B). Vertical deflection ceiling runner secured to lower surface of floor with steel fasteners spaced max 24 in. (610 mm) OC.
THE STEEL NETWORK INC — VertiTrack VTD250, VTD362, VTD400, VTD600 and VTD800

B. Studs — Steel studs to be min 3-1/2 in. (89 mm) wide. Studs cut 1/2 to 3/4 in. (13 to 19 mm) less in length than assembly height with bottom nesting in and resting on floor runner and with top nesting in ceiling runner without attachment. When slotted ceiling runner (Item 2A1) is used, steel studs secured to slotted ceiling runner with No. 8 by 1/2 in. (13 mm) long wafer head steel screws at midheight of slot on each side of wall. Stud spacing not to exceed 24 in. (610 mm) OC. When vertical deflection ceiling runner (Item 2A2) is used, steel studs secured to slotted vertical deflection clips, through the bushings, with steel screws at midheight of each slot. Stud spacing not to exceed 24 in. (610 mm) OC.

C. Gypsum Board* — For 1 hr assembly, one layer of 5/8 in. (16 mm) thick gypsum board is required in the individual Wall and Partition Design. For 2 hr assembly, two layers of 5/8 in. (16 mm) thick gypsum board is required in the individual Wall and Partition Design. Wall to be constructed as specified in the individual U400 or V400 Series Design in the UL Fire Resistance Directory, except that a max 1 in. (25 mm) gap shall be maintained between the top of gypsum board and bottom of concrete floor. The screws attaching the gypsum board to the studs at the top of the first layer shall be located 4 in. (102 mm) below the floor. The screws attaching the second layer to the steel studs shall be installed into the studs 3-1/2 in. (89 mm) below the floor.

The hourly fire rating of the joint system is equql to the hourly ratings of the walls.

3. Fill, Void or Cavity Material* - Sealant — Max separation between bottom of floor and top of wall is 1 in. (25 mm). The joint system is designed to accommodate a max 17 percent compression or extension from its installed width. Min 5/8 in. (16 mm) thickness of fill material installed on each side of the wall between the top of the gypsum board and the bottom of the concrete floor, flush with each surface of the wall.
HILTI CONSTRUCTION CHEMICALS, DIV OF HILTI INC — CP601S Elastomeric Firestop Sealant or CP606 Flexible Firestop Sealant or CFS-S SIL GG Sealant. L Ratings apply only when CP606 or CFS-S SIL GG Sealant is used.

4. Forming Material — (Optional, Not Shown) - Mineral wool insulation, fiberglass batt insulation or polyurethane/polyethylene foam backer rod. Forming material to be recessed from both surfaces of the 2 hr fire rated wall to accommodate the required thickness of fill material.

*Bearing the UL Classification Mark

Reproduced by HILTI, Inc. Courtesy of
Underwriters Laboratories, Inc.
December 23, 2013

Classified by
Underwriters Laboratories, Inc.
to UL 2079 and CAN/ULC-S115

System No. HW-D-0264

ANSI/UL2079	CAN/ULC S115
Assembly Ratings — 1 and 2 Hr (See Item 4)	F Ratings — 1 and 2 Hr (See Item 4)
Nominal Joint Width - 1-1/2 In.	FT Ratings — 1 and 2 Hr (See Item 4)
Class II Movement Capabilities — 50% Compression or Extension	FH Ratings — 1 and 2 Hr (See Item 4)
L Rating At Ambient — Less Than 1 CFM/sq ft	FTH Ratings — 1 and 2 Hr (See Item 4)
L Rating At 400 F — Less Than 1 CFM/sq ft	Nominal Joint Width - 1-1/2 In.
	Class II Movement Capabilities — 50% Compression or Extension
	L Rating At Ambient — Less Than 1 CFM/sq ft
	L Rating At 400 F — Less Than 1 CFM/sq ft

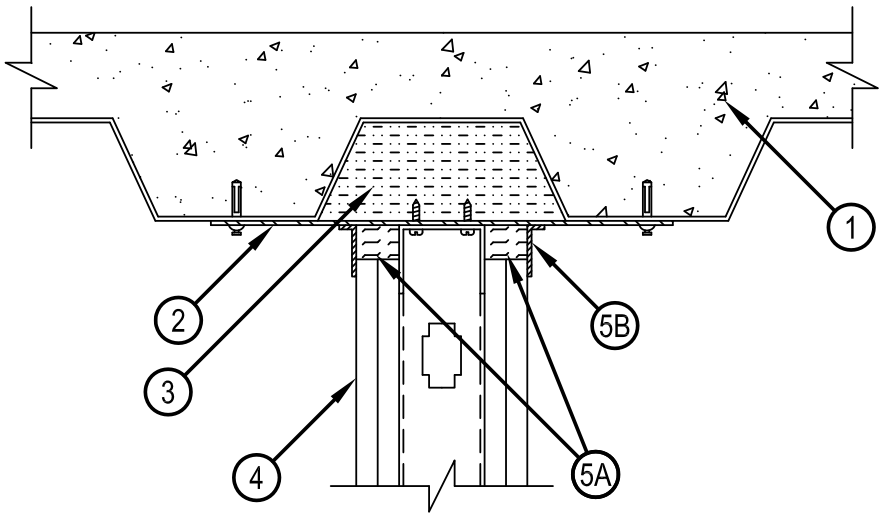

Hilti Firestop Systems

Reproduced by HILTI, Inc. Courtesy of
Underwriters Laboratories, Inc.
August 26, 2013

1. Floor Assembly — The fire-rated fluted steel floor unit/concrete floor assembly shall be constructed of the materials and in the manner described in the individual D700 or D900 Series Floor-Ceiling Design in the Fire Resistance Directory and shall include the following construction features:
   A. Steel Floor and Form Units* — Max 3 in. (76 mm) deep galv steel fluted floor units.
   B. Concrete — Min 2-1/2 in. (64 mm) thick reinforced concrete, as measured from the top plane of the floor units.
   C. Spray-Applied Fire Resistive Material* — (Optional. Not Shown) - After installation of the steel straps (Item 2), the steel floor units may be sprayed with the min thickness of material specified in the individual D700 Series Design.
      ISOLATEK INTERNATIONAL — Type 300
      W R GRACE & CO - CONN — Type MK-6/HY

1A. Roof Assembly — (Not Shown) - As an alternate to the floor assembly, a fire rated fluted steel deck roof assembly may be used. The roof shall be constructed of the materials and in the manner described in the individual P700 or P900 Series Roof-Ceiling designs in the UL Fire Resistance Directory. The hourly rating of the roof assembly shall be equal to or greater than the hourly rating of the wall assembly. The roof assembly shall include the following construction features:
   A. Steel Roof Deck — Max 3 in. (76 mm) deep galv steel fluted roof deck.
   B. Roof Insulation — Roof insulation to consist of min 2-1/4 in. (57 mm) thick poured insulating concrete, as measured from the top plane of the roof deck.
   C. Spray-Applied Fire Resistive Material* — (Optional. Not Shown) - After installation of the steel straps (Item 2), all surfaces of the steel deck may be sprayed with the thickness of material as specified in the individual P700 Series Floor-Ceiling Design. The flutes of the steel deck above the steel straps and wall may be filled with material as an alternate to the Forming Material (Item 3).
      ISOLATEK INTERNATIONAL — Type 300
      W R GRACE & CO - CONN — Type MK-6/HY

2. Steel Straps — Min. 2 in. (51 mm) wide 16 MSG galv steel straps cut to a length to span the flute and overlap the adjacent valleys of fluted floor units or roof deck by 1-1/2 in. (38 mm). Straps spaced max 24 in. (610 mm) OC and fastened to floor or roof assembly with 1/4 in. (6 mm) diam by 1-1/2 in. (38 mm) long steel concrete anchors. As an alternate, min 1 in. (25 mm) long Hilti X-DNI 27 P8 S15 or Hilti X-U 27 P8 S15 powder actuated floor pins with integral min 9/16 in. (14 mm) diam washer may be used to secure steel straps to floor or roof assembly.

3. Forming Material* - Plugs — Preformed mineral wool plugs, formed to the shape of the fluted floor units or roof deck, friction fit to completely fill the flutes above the steel straps. Adjacent lengths of plugs to be tightly butted with butted seams spaced min 24 in. (610 mm) apart along the length of the plugs.
   HILTI CONSTRUCTION CHEMICALS, DIV OF HILTI INC — CP777 Speed Plugs

3A. Forming Material* — As an alternate to Item 3, min 4 pcf (64 kg/m3) mineral wool batt insulation forming material cut to the shape of the fluted floor units or roof deck and friction fit to completely fill the flutes above the steel straps. Adjacent lengths of batts to be tightly butted with butted seams spaced min 24 in. (610 mm) apart along the length of the flutes.
   ROCK WOOL MANUFACTURING CO — Delta Board
   ROXUL INC — SAFE
   THERMAFIBER INC — Type SAF
   IIG MINWOOL L L C — MinWool-1200 Safing

4. Wall Assembly — The 1 hr or 2 h fire-rated gypsum board/stud wall assembly shall be constructed of the materials and in the manner specified in the individual U400, V400 or W400 Series Wall and Partition Design in the UL Fire Resistance Directory and shall include the following construction features:
   A. Steel Floor and Ceiling Runners — Floor and ceiling runners of wall assembly shall consist of min No. 25 gauge galv steel channels sized to accommodate steel studs (Item 2B). Flange height of ceiling runner to be 3/4 in. (19 mm) greater than extended joint width. Ceiling runner installed parallel to direction of fluted steel floor units, directly beneath steel straps, and secured to straps with two No. 8 self-drilling, self-tapping steel screws per strap.
   A1. Light Gauge Framing* — Slotted Ceiling Runner — As an alternate to the ceiling runner in Item 4A, ceiling runner to consist of galv steel channel with slotted flanges sized to accommodate steel studs (Items 4B). Ceiling runner installed parallel to direction of fluted steel floor deck, directly beneath steel straps, and secured to straps with two No. 8 self-drilling, self-tapping steel screws per strap. When slotted ceiling runner is used, deflection channel (Item 3A) shall not be used.
      BRADY CONSTRUCTION INNOVATIONS INC, DBA SLIPTRACK SYSTEMS — SLP-TRK
      CALIFORNIA EXPANDED METAL PRODUCTS CO — CST
      CLARKDIETRICH BUILDING SYSTEMS — Type SLT, SLT-H
      MARINO/WARE, DIV OF WARE INDUSTRIES INC — Type SLT
      METAL-LITE INC — The System
      THE STEEL NETWORK INC — VertiTrack VT, series,250VT, 362VT, 400VT, 600VT and 800VT

Reproduced by HILTI, Inc. Courtesy of
Underwriters Laboratories, Inc.
August 26, 2013

Customer Hotline: Hong Kong 8228 8118, Macau 00800 8228 8118 Email: hksales@hilti.com

A2. Light Gauge Framing*- Notched Ceiling Runner — As an alternate to the ceiling runners in Items 2A through 2A1, notched ceiling runners to consist of C-shaped galv steel channel with notched return flanges sized to accommodate steel studs (Item 2B). Notched ceiling runner installed perpendicular to direction of fluted steel deck and secured to valleys with steel masonry anchors spaced max 24 in. (610 mm) OC.
OLMAR SUPPLY INC — Type SCR

A3. Light Gauge Framing* — Slotted Ceiling Runner — As an alternate to the ceiling runner in Item 4A through 4A2, ceiling runner to consist of galv steel channel with slotted flanges sized to accommodate steel studs (Item 4B). Flange height of slotted ceiling runner shall be 3-1/4 in. (83 mm) with 2 in. (51 mm) deep slots. Slotted ceiling runner installed parallel to direction of fluted steel floor deck, directly beneath steel straps, and secured to straps with two No. 8 self-drilling, self-tapping steel screws per strap.
SCAFCO STEEL STUD MANUFACTURING CO — Slotted Track-Type SDLT

B. Studs — Steel studs to be min 2-1/2 in. (64 mm) wide. Studs cut 3/4 in. (19 mm) to 1 in. (25 mm) less in length than assembly height with bottom nesting in and resting on the floor runner and with top nesting in ceiling runner without attachment. When slotted ceiling runner (Item 4A1) is used, steel studs secured to slotted ceiling runner with No. 8 by 1/2 in. (13 mm) long wafer head steel screws at midheight of slot on each side of wall. Stud spacing not to exceed 24 in. (610 mm) OC. When slotted ceiling runner (Item 4A3) is used, steel studs cut in lengths 3/4 to 1-3/4 in. (19 to 44 mm) less than floor to ceiling height and secured to slotted ceiling runner with No. 8 by 1/2 (13 mm) long wafer head steel screws at +/- 3/16 in. (5 mm) of the mid-height of slot on each side of wall.

C. Gypsum Board* — For 1 hr assembly, one layer of 5/8 in. (16 mm) thick gypsum board as specified in the individual Wall and Partition Design. For 2 hr assembly, two layers of 5/8 in. (16 mm) thick gypsum board are specified in the individual Wall and Partition Design. For both hourly ratings, a nominal 1-1/2 in. (38 mm) gap shall be maintained between the top of the gypsum board and the bottom surface of the steel floor units and the top row of screws shall be installed into the studs 3 in. (76 mm) below the valleys of the steel floor units. The hourly ratings of the joint system are dependent on the hourly rating of the wall.

5. Joint System — Max separation between bottom of floor and top of wall is 1-1/2 in. (38 mm). The joint system is designed to accommodate a max 50percent compression or extension from its installed width. The joint system consists of a forming material and a fill material between the top of the gypsum board and the bottom of the floor, as follows:

A. Forming Material* — Min 4 pcf (64 kg/m3) density mineral wool batt insulation cut shall be cut into strips to fill the gap between the top of gypsum board and bottom of the floor units. The width of the strips shall be equal to the total thickness of the gypsum board. The strips of mineral wool are compressed 50 percent in thickness and firmly packed into the gap between the top of the gypsum board and bottom of the mineral wool plug or steel floor units.
ROCK WOOL MANUFACTURING CO — Delta Board
ROXUL INC — SAFE
THERMAFIBER INC — Type SAF
IIG MINWOOL L L C — MinWool-1200 Safing

A1. Forming Material* - Strips — (Optional) - Nom 5/8 in. (16 mm) and 1-1/4 in. (32 mm) wide precut mineral wool strips for 1 hr and 2 hr rated assemblies respectively. The strips are compressed 50 percent in thickness and firmly packed into the gap between the top of the gypsum board and bottom of the steel floor units on both sides of the wall.
HILTI CONSTRUCTION CHEMICALS, DIV OF HILTI INC — CP 767 Speed Strips

B. Fill, Void or Cavity Material* - Sealant — Min 1/8 in. (3.2 mm) wet thickness (min 1/16 in. or 1.6 mm dry thickness) of fill material sprayed or troweled on each side of the wall to completely cover the mineral wool forming material and to overlap a min of 1/2 in. (13 mm) onto gypsum board, steel floor units or roof deck and steel straps on both sides of the wall and min 2 in. (51 mm) onto spray-applied fire resistive material (Item 1C).
HILTI CONSTRUCTION CHEMICALS, DIV OF HILTI INC — CFS-SP WB Firestop Joint Spray

*Bearing the UL Classification Mark

Reproduced by HILTI, Inc. Courtesy of
Underwriters Laboratories, Inc.
August 26, 2013

CLASSIFIED C UL US

Classified by Underwriters Laboratories, Inc. to UL 2079 and CAN/ULC-S115

System No. HW-D-0292

ANSI/UL2079	CAN/ULC S115
Assembly Ratings — 1, 2, 3 and 4 Hr (See Item 2)	F Ratings — 1, 2, 3 and 4 Hr (See Item 2)
Nominal Joint Width - 1 In.	FT Ratings — 1, 2, 3 and 4 Hr (See Item 2)
Class II Movement Capabilities —12.5% Compression or Extension	FH Ratings — 1, 2, 3 and 4 Hr (See Item 2)
L Rating At Ambient — Less Than 1 CFM/lin ft	FTH Ratings — 1, 2, 3 and 4 Hr (See Item 2)
L Rating At 400 F — Less Than 1 CFM/lin ft	Nominal Joint Width - 1 In.
	Class II Movement Capabilities — 12.5% Compression or Extension
	L Rating At Ambient — Less Than 1 CFM/lin ft
	L Rating At 400 F — Less Than 1 CFM/lin ft

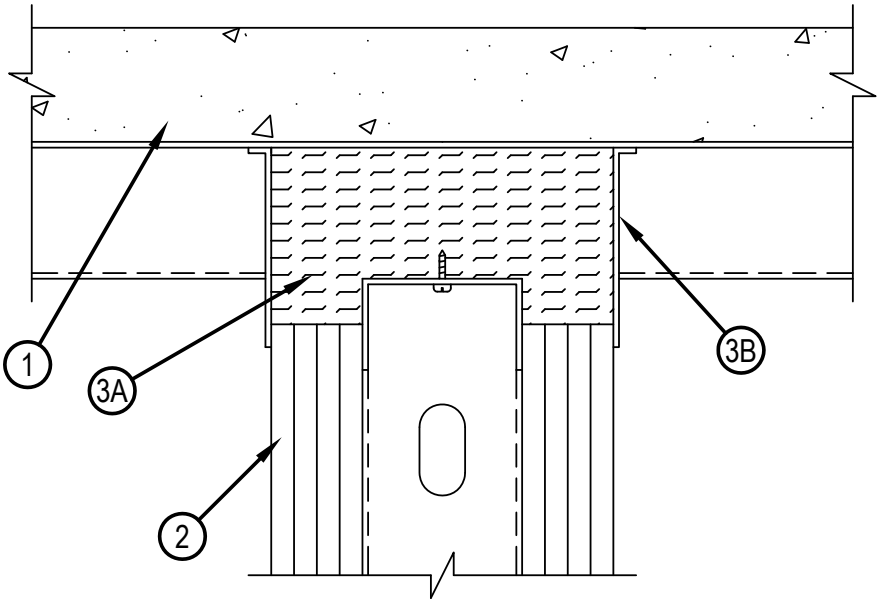

1. Floor Assembly — The fire-rated fluted steel floor unit/concrete floor assembly shall be constructed of the materials and in the manner described in the individual Floor-Ceiling Design in the Fire Resistance Directory. The hourly rating of the floor assembly shall be equal to or greater than the hourly rating of the wall assembly. The floor assembly shall include the following construction features:
   A. Steel Floor and Form Units* — Max 3 in. (76 mm) deep galv steel fluted floor units.
   B. Concrete — Min 2-1/2 in. (64 mm) thick reinforced concrete, as measured from the top plane of the floor units.
2. Wall Assembly — The 1, 2, 3 or 4 h fire-rated gypsum board/stud wall assembly shall be constructed of the materials and in the manner specified in the individual U400, V400 or W400 Series Wall and Partition Design in the UL Fire Resistance Directory and shall include the following construction features:
   A. Steel Floor and Ceiling Runners — Floor and ceiling runners of wall assembly shall consist of min No. 25 gauge galv steel channels sized to accommodate steel studs (Item 2B). Flange height of ceiling runner shall be min 1/4 in. (6 mm) greater than max extended joint width.. Ceiling runner secured to valleys of steel floor units with steel fasteners or by welds spaced max 24 in. (610 mm) OC.
   A1. Light Gauge Framing*-Slotted Ceiling Runner - — As an alternate to the ceiling runner in Item 2A, slotted ceiling runner to consist of galv steel channel with slotted flanges sized to accommodate steel studs (Item 2B). Slotted ceiling runner installed perpendicular to direction of fluted steel floor units and secured to valleys with steel fasteners spaced max 24 in. (610 mm) OC.
   CALIFORNIA EXPANDED METAL PRODUCTS CO — CST
   BRADY CONSTRUCTION INNOVATIONS INC, DBA SLIPTRACK SYSTEMS — SLP-TRK
   MARINO/WARE, DIV OF WARE INDUSTRIES INC — Type SLT

Reproduced by HILTI, Inc. Courtesy of Underwriters Laboratories, Inc.
March 23, 2012

A2. Light Gauge Framing*-Vertical Deflection Ceiling Runner — As an alternate to the ceiling runners in Item 2A and 2A1, vertical deflection ceiling runner to consist of galv steel channel with slotted vertical deflection clips mechanically fastened within runner. Slotted clips, provided with step bushings, for permanent fastening of steel studs. Flanges sized to accommodate steel studs (Item 2B). Vertical deflection ceiling runner installed perpendicular to direction of fluted steel floor units and secured to valleys with steel fasteners spaced max 24 in. (610 mm) OC.

THE STEEL NETWORK INC — VertiTrack VTD358, VTD400, VTD600 and VTD800

B. Studs — Steel studs to be min 3-1/2 in. (89 mm) wide. Studs cut 1/2 in. (13 mm) to 3/4 in. (19 mm) less in length than assembly height with bottom nesting in and resting on the floor runner and with top nesting in ceiling runner without attachment. When slotted ceiling runner is used, steel studs secured to slotted ceiling runner with No. 8 by 1/2 in. (13 mm) long wafer head steel screws at midheight of slot on each side of wall. When vertical deflection ceiling runner is used, steel studs secured to slotted vertical deflection clips, through bushings, with steel screws at midheight of each slot. Stud spacing not to exceed 24 in. (610 mm) OC.

C. Gypsum Board* — Nom 1/2 or 5/8 in. (13 or 16 mm) thick gypsum board with square or tapered edges. The gypsum board type, thickness number of layers, fastener type and sheet orientation shall be as specified in the individual Wall and Partition Design, except that a nom 1 in. (25 mm) gap shall be maintained between top of gypsum board and the lower surface of the steel floor units. The screws attaching the gypsum board to the studs at the top of the first layer shall be located 4 in. (102 mm) from the steel floor unit valleys. The screws attaching the second layer to the steel studs shall be located 3-1/2 in. (89 mm) from the valleys of the steel floor units. The screws attaching the gypsum board to the studs at the top of the third layer shall be located 3 in. (76 mm) from the steel floor unit valleys. The screws attaching the fourth layer to the steel studs shall be located 2-1/2 in. (64 mm) from the valleys of the steel floor units.

The hourly ratings of the joint system are dependent on the hourly rating of the wall.

3. Joint System — Max separation between bottom of floor units and top of gypsum board at time of installation is 1 in. (25 mm). The joint system is designed to accommodate a max 12.5 percent compression or extension from its installed width. The joint system shall consist of a forming material and a fill material, as follows:

A. Forming Material* — Nom 4 pcf (64 kg/m3) density mineral wool batt insulation cut approx 25 percent wider than the flutes and with a length approx equal to the overall thickness of the wall. Multiple pieces stacked on top of each other, as needed, and then compressed 50 percent in thickness and inserted into the flutes of the steel deck above the top of the ceiling runner. The mineral wool batt insulation is to project beyond each side of the ceiling runner, flush with wall surfaces. Additional strips of nom 4 pcf (64 kg/m3) mineral wool batt insulation are to be cut to a width equal to the total thickness of gypsum board layers to fill the gap between the top of the gypsum board and bottom of the steel deck. The strips of mineral wool are compressed 50 percent in thickness and tightly packed, cut edge first, into the gap between the top of the gypsum board and bottom of the steel deck on both sides of the wall.

ROCK WOOL MANUFACTURING CO — Delta Board

ROXUL INC — SAFE

THERMAFIBER INC — Type SAF

B. Fill, Void or Cavity Material* — Min 1/8 in. (3.2 mm) wet thickness (min 1/16 in. or 1.6 mm dry thickness) of fill material sprayed or troweled on each side of the wall to completely cover mineral wool forming material and to overlap a min of 1/2 in. (13 mm) onto gypsum board and steel deck on both sides of wall.

HILTI CONSTRUCTION CHEMICALS, DIV OF HILTI INC — CP672 Firestop Spray or CFS-SP WB Firestop Joint Spray

*Bearing the UL Classification Mark

Reproduced by HILTI, Inc. Courtesy of
Underwriters Laboratories, Inc.
March 23, 2012

Classified by
Underwriters Laboratories, Inc.
to UL 2079 and CAN/ULC-S115

System No. HW-D-0342

ANSI/UL2079	CAN/ULC S115
Assembly Rating — 2 Hr	F Rating — 2 Hr
Nominal Joint Width - 1 In.	FT Rating — 2 Hr
Class II Movement Capabilities — 8% Compression and Extension	FH Rating — 2 Hr
L Rating At Ambient — Less Than 1 CFM/lin ft	FTH Rating — 2 Hr
L Rating At 400 F — Less Than 1 CFM/lin ft	Nominal Joint Width - 1 In.
	Class II Movement Capabilities — 8% Compression and Extension
	L Rating At Ambient — Less Than 1 CFM/lin ft
	L Rating At 400 F — Less Than 1 CFM/lin ft

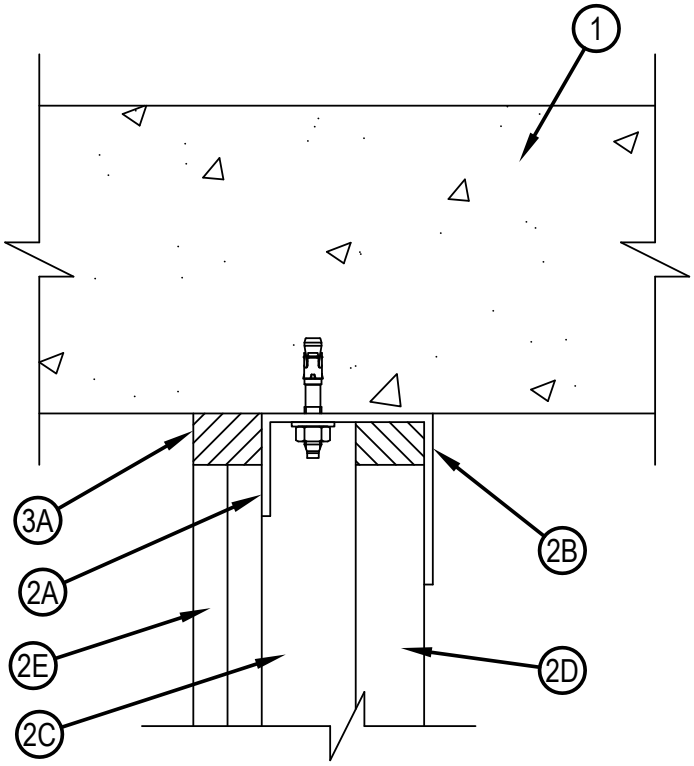

Hilti Firestop Systems

Reproduced by HILTI, Inc. Courtesy of
Underwriters Laboratories, Inc.
March 23, 2012

1. Floor Assembly — Min 2-1/2 in. (64 mm) thick reinforced lightweight or normal weight (100-150 pcf or 1600-2400 kg/m3) structural concrete.
2. Shaft Wall Assembly — The 2 hr fire-rated gypsum board /steel stud shaft wall assembly shall be constructed of the materials and in the manner described in the individual U400, V400 or W400 Series Wall and Partition Design in the UL Fire Resistance Directory and shall include the following construction features:
   A. Floor and Ceiling Runners — J-shaped runner, 2-1/2 in. (64 mm) wide with unequal legs of min 1-1/4 in. (32 mm) and 2 in. (51 mm), fabricated from min 24 MSG galv steel. Runners positioned with short leg toward finished side of wall. Runners attached to structural supports with steel fasteners located not greater than 2 in. (51 mm) from ends and not greater than 24 in. (610 mm) OC.
   B. Light Gauge Framing* - Slotted Ceiling Track — (Optional) Slotted ceiling track shall consist of galv steel channels with slotted flanges. Slotted ceiling track sized to accommodate steel "C-H" studs (Items 2C). Attached to concrete at ceiling with steel fasteners spaced max 24 in. (610 mm) OC.
   CALIFORNIA EXPANDED METAL PRODUCTS CO — CST
   BRADY CONSTRUCTION INNOVATIONS INC, DBA SLIPTRACK SYSTEMS — SLP-TRK
   MARINO/WARE, DIV OF WARE INDUSTRIES INC — Type SLT
   B1. Light Gauge Framing Members* — (Optional Not Shown) - As an option, the steel studs (Item 2C) may incorporate vertical deflection clips for attachment to the ceiling runner (Item 2A) in accordance with the manufacturer's instructions.
   THE STEEL NETWORK INC — VertiClip SLD 150.
   C. Steel Studs — C-H-shaped studs, 2-1/2 in. (64 mm) wide by 1-1/2 in. (38 mm) deep, fabricated from min 25 MSG galv steel, cut to lengths 3/8 to 1/2 in. (10 to 13 mm) less than floor to ceiling height and spaced 24 in. (610 mm) OC. Studs nest in floor runner at bottom and J runner or slotted ceiling track at top. After installation of gypsum board liner panels (Item 2D), studs secured to flange of floor runner on finished side of wall only with No. 6 by 1/2 in. (13 mm) long self-drilling, self-tapping steel screws. Studs secured to flange of slotted ceiling track on finished side of wall only with No. 8 by 1/2 in. (13 mm) long self-drilling, self-tapping wafer head steel screws at slot midheight.
   D. Gypsum Board* — 1 in. (25 mm) thick by 24 in. (610 mm) wide gypsum board liner panels as specified in the individual U400 or V400-Series design. Panels cut 1 in. (25 mm) less in length than floor to ceiling height. Vertical edges inserted in "H"-shaped section of "C-H" studs. At the ends of the assembly, the free edge of the end panels are attached to the long leg of vertical J-runners (Item 2A) with 1-5/8 in. (41 mm) long Type S steel screws spaced max 12 in. (305 mm) OC.
   E. Gypsum Board* — Gypsum board sheets, 1/2 or 5/8 in. (13 or 16 mm) thick, applied vertically or horizontally in two layers on finished side of wall as specified in the individual U400 or V400-Series design. A max 1 in. (25 mm) gap shall be maintained between the top of the gypsum board and the bottom surface of the concrete floor. The screws attaching the gypsum board layers to the C-H studs shall be located 1 in. (25 mm) below the bottom of the J-runner or slotted ceiling track. No gypsum board attachment screws are to penetrate the ceiling J-runner and slotted ceiling track.
3. Joint System — Max separation between top of liner panel (Item 2D) and between top of gypsum board sheets (Item 2E) at time of installation of joint system is 1 in. (25 mm). The joint system is designed to accommodate a maximum 8 percent compression and extension from its installed width. The joint system consists of the following:
   A. Fill, Void or Cavity Material* - Sealant — Min 1 in. (25 mm) depth of sealant to be installed to fill linear gap between top of gypsum board liner panel (Item 2D) and top inside surface of ceiling J-runner or slotted ceiling track prior to installation of gypsum board (ItemD2E) on finished side of wall. Min 1 in. (25 mm) depth of sealant to be installed to fill linear gap between top of gypsum board sheets (Item 2E) and bottom of concrete floor.
   HILTI CONSTRUCTION CHEMICALS, DIV OF HILTI INC — CP 606

*Bearing the UL Classification Mark

Reproduced by HILTI, Inc. Courtesy of
Underwriters Laboratories, Inc.
March 23, 2012

System No. HW-D-0541

Classified by Underwriters Laboratories, Inc. to UL 2079 and CAN/ULC-S115

ANSI/UL2079	CAN/ULC S115
Assembly Rating — 2 Hr	F Rating — 2 Hr
Nominal Joint Width - 3/4 In.	FT Rating — 2 Hr
Class II Movement Capabilities — 16% Compression and Extension	FH Rating — 2 Hr
	FTH Rating — 2 Hr
	Nominal Joint Width - 3/4 In.
	Class II Movement Capabilities — 16% Compression and Extension

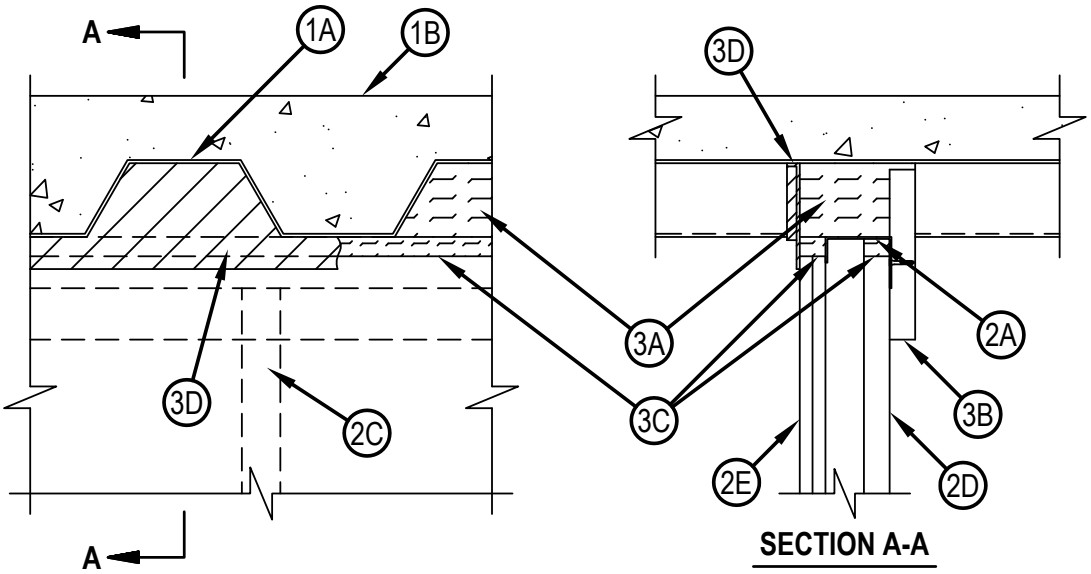

1. Floor Assembly — The fire-rated fluted steel deck/concrete floor assembly shall be constructed of the materials and in the manner described in the individual Floor-Ceiling Design in the UL Fire Resistance Directory. The floor assembly shall include the following construction features:
   A. Steel Floor and Form Units* — Max 3 in. (76 mm) deep galv fluted floor units.
   B. Concrete — Min 2-1/2 in. (64 mm) thick reinforced (100-150 pcf 1600-2400 kg/m3) concrete, as measured from the top plane of the floor units.
   C. Spray-Applied Fire Resistive Materials* — (Optional, Not Shown)—Prior to or after the installation of the steel ceiling runners, and prior to the installation of the Forming Material and Fill, Void or Cavity Material (Items 2A, 3A, 3B, respectively) the steel floor units may be sprayed with a min 5/16 in. (8 mm) to max 1-3/4 in. (45 mm) thickness of fire resistive material.
   ISOLATEK INTERNATIONAL — Type 300
   W R GRACE & CO - CONN — Type MK-6-HY
2. Shaft Wall Assembly — The 2 hr fire-rated gypsum board /steel stud shaft wall assembly shall be constructed of the materials and in the manner described in the individual U400, V400 or W400 Series Wall and Partition Design in the UL Fire Resistance Directory and shall include the following construction features:
   A. Floor and Ceiling Runners — J-shaped runner, min 2-1/2 in. (64 mm) wide with unequal legs of 1 in. and 2 in. (25 and 51 mm), fabricated from 24 MSG galv steel. Runners positioned with short leg toward finished side of wall. Runners attached to floor with steel fasteners steel masonry anchors or welds located not greater than 2 in. (51 mm) from ends and not greater than 24 in. (610 mm) OC. The use of welds to secure the ceiling runner may only be used prior to the installation of the optional spray-applied material.

Reproduced by HILTI, Inc. Courtesy of Underwriters Laboratories, Inc.
April 03, 2012

Customer Hotline: Hong Kong 8228 8118, Macau 00800 8228 8118 Email: hksales@hilti.com

A1. Light Gauge Framing*-Slotted Ceiling Runner — As an alternate to the ceiling runner in Item 2A, slotted ceiling runner to consist of galv steel channel with slotted flanges sized to accommodate steel studs (Item 2C). Slotted ceiling runner installed perpendicular to direction of fluted steel deck and secured to valleys with steel masonry anchors, steel fasteners or welds spaced max 24 in. (610 mm) OC before or after optional spray-applied fire resistive material is used. The use of welds to secure the ceiling runner may only be used prior to the installation of the optional spray-applied material.
BRADY CONSTRUCTION INNOVATIONS INC, DBA SLIPTRACK SYSTEMS — SLP-TRK
CALIFORNIA EXPANDED METAL PRODUCTS CO — CST
CLARKDIETRICH BUILDING SYSTEMS — Type SLT, SLT-H
MARINO/WARE, DIV OF WARE INDUSTRIES INC — Type SLT
SCAFCO STEEL STUD MANUFACTURING CO — Slotted Track
METAL-LITE INC — The System
TELLING INDUSTRIES L L C — True-Action Deflection Track

B. Steel Attachment Clips — (Optional - Not Shown) - When spray applied fireproofing is used ceiling runner may be secured to deck with Z-shaped clips formed from min 1 in. (25 mm) long strips of min 20 ga galv steel. Length of clips hosuld not exceed the width (thickness) of the wall. Clips to be sized to extend through the thickness of the spray-applied fire-resistive material on the bottom of the steel deck with 1-1/2 or 2 in. (38 or 51 mm) long upper and lower legs. Legs of clips fastened to valleys of steel deck (prior to application of spray-applied fire-resistive materials) and top of ceiling runner with masonry anchors, steel fasteners or welds. Clips spaced max 24 in. (610 mm) OC.

C. Steel Studs — C-H-shaped studs, min 2-1/2 in. wide by 1-1/2 in. deep, (64 mm wide by 38 mm deep) fabricated from 25 MSG galv steel, cut to lengths 3/8 to 1/2 in. (10 to 13 mm) less than floor to ceiling height and spaced 24 in. (610 mm) OC.

D. Gypsum Board* — 1 in. (25 mm) thick gypsum board liner panels. Panels cut 3/4 in. (19 mm) less in length than floor to ceiling height. Vertical edges inserted in H -shaped section of C-H studs. At the ends of the assembly, the free edge of the end panels are attached to the long leg of vertical J-runners (Item 2A) with 1-5/8 in. (41 mm) long Type S steel screws spaced max 12 in. (305 mm) OC.

E. Gypsum Board* — Min 1/2 in. (13 mm) thick, "Type C" gypsum board applied vertically in two layers. Panels cut 3/4 in. (19 mm) less in length than floor to ceiling height The screws attaching the gypsum board layers to the C-H studs shall be located 1 in. (25 mm) below the bottom of the J-runner or slotted ceiling track. No gypsum board attachment screws are to penetrate the ceiling J-runner and slotted ceiling track.

3. Joint System — Max separation between bottom of fluted deck surface and top of gypsum board (at the time of installation of the joint system) is 3/4 in. The joint system is designed to accommodate a max 16 percent compression or extension from its installed width. The joint system consists of the following:

A. Packing Material — Min 4 pcf (64 kg/m3)density mineral wool batt insulation cut to the shape of the fluted deck, 50 percent larger than the area of the flutes and compressed into the flutes of the steel floor units above the ceiling runner as a permanent form. The mineral wool batt insulation is to project beyond the ceiling runner flush with the finished wall surface.
ROCK WOOL MANUFACTURING CO — Delta- Board
ROXUL INC — SAFE
THERMAFIBER INC — Type SAF

A1. Forming Material*—Plugs — (Optional, Not Shown) As an alternate to item 3A. Preformed mineral wool plugs, formed to the shape of the fluted floor units, friction fit to completely fill the flutes above the ceiling channel. The plugs shall project beyond the finished side of the ceiling runner, flush with wall surface.
HILTI CONSTRUCTION CHEMICALS, DIV OF HILTI INC — CP777 Speed Plugs

B. Wall Cladding — Min 1 in. (25 mm) thick gypsum board (Item 2D) cut to the contour of the steel floor units. Cladding can be attached from either side of the runner leg on the unfinished surface of the wall. The wall cladding is attached at the mid-height location of the long leg of the J-shaped runner with 1-5/8 in. (41 mm)Type S drywall screws 6 in.(152 m) in from each end and max 12 in. (305 mm) O.C. in between. The screws are to be positioned such that they avoid the locations of the steel studs. The top of the wall cladding shall be recessed min 1/8 in. to max 1/4 in. (3 to 6 mm) from the steel floor units and overlap the gypsum board min 5 in. (127 mm) as measured from the top of the ceiling runner.

C. Fill, Void or Cavity Material — Min 4 pcf (64 kg/m3) density mineral wool batt insulation cut approximately 50 larger than the area between the gypsum board and the bottom of the steel floor unit compressed and installed on finished side of the wall between the top of the gypsum board and the bottom of the steel floor units, flush with the surface of the wall and compressed and installed within J-shaped runner above top of liner panel flush with the inside surface of the panel.

Reproduced by HILTI, Inc. Courtesy of
Underwriters Laboratories, Inc.
April 03, 2012

C1. Forming Material* - Strips — (Optional) - As an alternate to item 3C when 5/8 in. (16 mm) or thicker gypsum board is used (Item 3D). The strips are compressed 50 percent and firmly packed, cut edge first, on both sides of the wall between the top of the gypsum board and the bottom of the steel floor units, flush with the finished surface of the wall and packed within J-shaped runner above top of liner panel flush with the inside surface of the panel.

HILTI CONSTRUCTION CHEMICALS, DIV OF HILTI INC — CP 767 Speed Strips

D. Fill, Void or Cavity Material* — Min 1/16 in. (1.6 mm) dry thickness (1/8 in. or 3.2 mm wet thickness) of fill material sprayed or troweled on finished side of the wall to completely cover mineral wool forming material and to overlap a min of 1/2 in. (13 mm) onto gypsum board and steel deck on finished side of wall. When Spray-Applied Fire Resistive Material*(Item 1C) is applied to the Steel Floor and Form Units* (Item 1A), the fill material is to overlap the gypsum board a min of 1/2 in. (13 mm) and the Spray-Applied Fire Resistive Material a min of 2 in. (51 mm) on finished side of wall.

HILTI CONSTRUCTION CHEMICALS, DIV OF HILTI INC — CP 672 Firestop Spray or CFS-SP WB Firestop Joint Spray

*Bearing the UL Classification Mark

Reproduced by HILTI, Inc. Courtesy of
Underwriters Laboratories, Inc.
April 03, 2012

Classified by
Underwriters Laboratories, Inc.
to UL 2079 and CAN/ULC-S115

System No. HW-D-1066

Assembly Ratings — 1 And 2 Hr (See Item 2)
Nominal Joint Width — 2 -1/2 In.
Class II Movement Capabilities — 40% Compression Or Extension

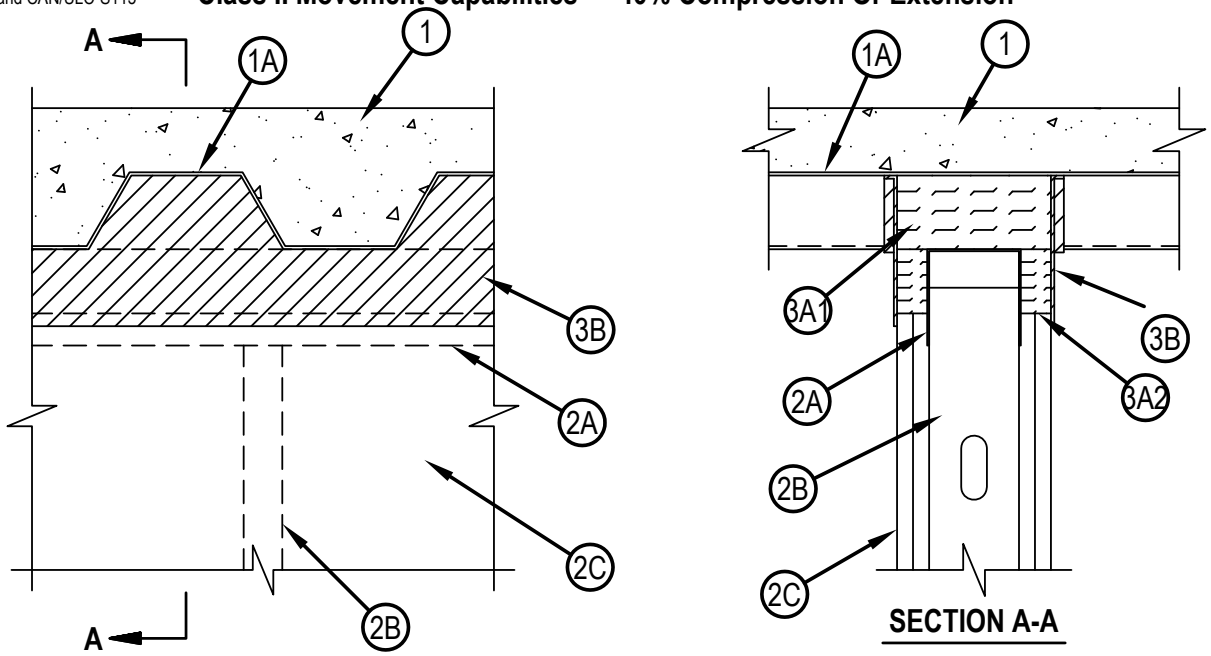

1. Floor Assembly — The fire rated fluted steel deck/concrete floor assembly shall be constructed of the materials and in the manner described in the individual D900 Series Floor-Ceiling Design in the UL Fire Resistance Directory and shall include the following construction features:
   A. Steel Floor and Form Units* — Max 3 in. (76 mm) deep galv steel fluted floor units.
   B. Concrete — Min 2-1/2 in. (64 mm) thick reinforced concrete, as measured from the top plane of the floor units.

1A. Roof Assembly — (Not Shown) — As an alternate to the floor assembly, a fire rated fluted steel deck roof assembly may be used. The roof assembly shall be constructed of the materials and in the manner described in the individual P900 Series Roof-Ceiling Design in the UL Fire Resistance Directory. The hourly rating of the roof assembly shall be equal to or greater than the hourly rating of the wall assembly. The roof assembly shall include the following construction features:
   A. Steel Roof Deck — Max 3 in. (76 mm) deep galv steel fluted roof deck.
   B. Roof Insulation — Min 2-1/4 in. (57 mm) thick poured insulating concrete, as measured from the top plane of the steel roof deck.

2. Wall Assembly — The 1 hr or 2 hr fire rated gypsum board/steel stud wall assembly shall be constructed of the materials and in the manner described in the individual U400 or V400 Series Wall and Partition Design in the UL Fire Resistance Directory and shall include the following construction features:
   A. Steel Floor and Ceiling Runners — Floor and ceiling runners of wall assembly shall consist of galv steel channels sized to accommodate steel studs (Item 2B). Flange height of ceiling runner shall be min 1/4 in. (6 mm) greater than max extended joint width.. Ceiling runner installed perpendicular to the deck direction and secured to valleys of deck with steel fasteners, steel masonry anchors or welds spaced max 24 in. (610 mm) OC. If the flange height of ceiling runner is min 1/4 in. (6 mm) greater than the max extended joint width, the max extension of the joint shall not exceed 40 percent of the joint width.
   A1. Light Gauge Framing* - Slotted Ceiling Runner — As an alternate to the ceiling runner in Item 2A, slotted ceiling runner to consist of galv steel channel with 3-1/4 in. (83 mm) high slotted flanges sized to accommodate steel studs (Item 2B). Ceiling runner installed perpendicular to direction of fluted steel floor or roof deck and secured to valleys with steel fasteners spaced max 24 in. (610 mm) OC. When slotted ceiling runner is used, the max extension of the joint shall not exceed 20 percent of the joint width.
   BRADY CONSTRUCTION INNOVATIONS INC,
   DBA SLIPTRACK SYSTEMS — SLPTRK325
   B. Studs — Steel studs to be min 3-1/2 in. (89 mm) wide. Studs cut 1-1/4 in. to 1-1/2 in. (32 to 38 mm) less in length than assembly height with bottom nesting in and resting on floor runner and with top nesting in ceiling runner without attachment.. Stud spacing not to exceed 24 in. (610 mm) OC.

Reproduced by HILTI, Inc. Courtesy of
Underwriters Laboratories, Inc.
June 28, 2011

Classified by
Underwriters Laboratories, Inc.
to UL 2079 and CAN/ULC-S115

System No. HW-D-1066

Assembly Ratings — 1 And 2 Hr (See Item 2)
Nominal Joint Width — 2 -1/2 In.
Class II Movement Capabilities — 40% Compression Or Extension

C. Gypsum Board* — Gypsum board installed to a min total thickness of 5/8 in. (16 mm) or 1-1/4 in. (32 mm) on each side of wall for 1 hr and 2 hr rated assemblies, respectively. Wall to be constructed as specified in the individual Wall and Partition Design in the UL Fire Resistance Directory, except that a nom 2-1/2 in. (64 mm) gap shall be maintained between the top of the gypsum board and the bottom of the steel deck and the top row of screws shall be installed into the studs 5 in. (127 mm) below the bottom plane of the floor or roof.

The hourly rating of the joint system is dependent on the hourly rating of the wall.

3. Joint System — Max separation between bottom plane of floor or roof and top of gypsum board at time of installation of joint system is 2-1/2 in. (64 mm). The joint system is designed to accommodate a max 40 compression or extension from its installed width. The joint system consists of forming material and a fill material as follows:

A. Forming Material* — Nom 5 in. (127 mm) thick pieces of nom 4 pcf (64 kg/m3) forming material sized to attain a min compression rate of 50 percent in the thickness direction firmly packed to completely fill the flutes. Additional pieces of batt insulation, 5/8 or 1-1/4 in. (16 or 32 mm) wide by 5 in. (127 mm) thick, shall be compressed 50 percent in thickness and installed cut edge first into gap between bottom of fluted floor or roof units and top of gypsum board.

FIBREX INSULATIONS INC — FBX Safing Insulation
ROCK WOOL MANUFACTURING CO — Delta Board
ROXUL INC — SAFE
THERMAFIBER INC — Type SAF

A1. Forming Material*—Plugs — As an alternate to Item 3A, preformed mineral wool plugs, formed to the shape of the fluted floor units, friction fit to completely fill the flutes above the ceiling runner. The plugs shall project beyond each side of the ceiling runner, flush with wall surfaces. Additional forming material, described in Item 3A2, to be used in conjunction with the plugs to fill the gap between the top of gypsum board and the bottom of plug.

HILTI CONSTRUCTION CHEMICALS, DIV OF
HILTI INC — CP777 Speed Plugs

A2. Forming Material* - Strips — Nom 5/8 in. (16 mm) and 1-1/4 in. (32 mm) wide by 5 in. (127 mm) thick precut mineral wool strips for 1 and 2 hr rated assemblies, respectively. The strips are compressed 50 percent in thickness and firmly packed into the gap between the top of the gypsum board and bottom of the steel floor or roof deck on both sides of the wall.

HILTI CONSTRUCTION CHEMICALS, DIV OF
HILTI INC — CP 767 Speed Strips

B. Fill, Void or Cavity Material* — Min 1/16 in. (1.6 mm) dry thickness (min 1/8 in. or 3.2 mm wet thickness) of fill material sprayed on each side of the wall to completely cover mineral wool forming material and to overlap a min of 1/2 in. (13 mm) onto gypsum board and steel deck on both sides of wall.

HILTI CONSTRUCTION CHEMICALS, DIV OF
HILTI INC — CP672 Firestop Spray or CFS-SP WB Firestop Joint Spray

*Bearing the UL Classification Mark

Reproduced by HILTI, Inc. Courtesy of
Underwriters Laboratories, Inc.
June 28, 2011

Classified by
Underwriters Laboratories, Inc.
to UL 2079 and CAN/ULC-S115

System No. HW-D-1067

Assembly Ratings — 1 and 2 Hr (See Item 2)
Nominal Joint Width — 2-1/2 In.
Class II Movement Capabilities — 40% Compression or Extension

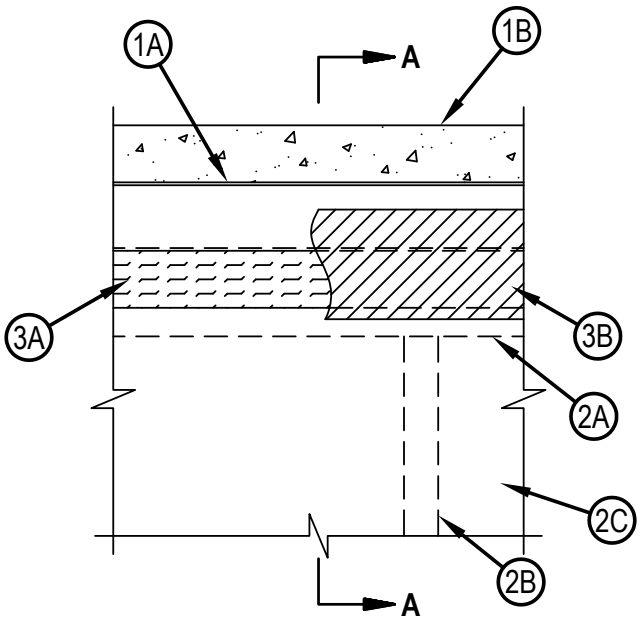

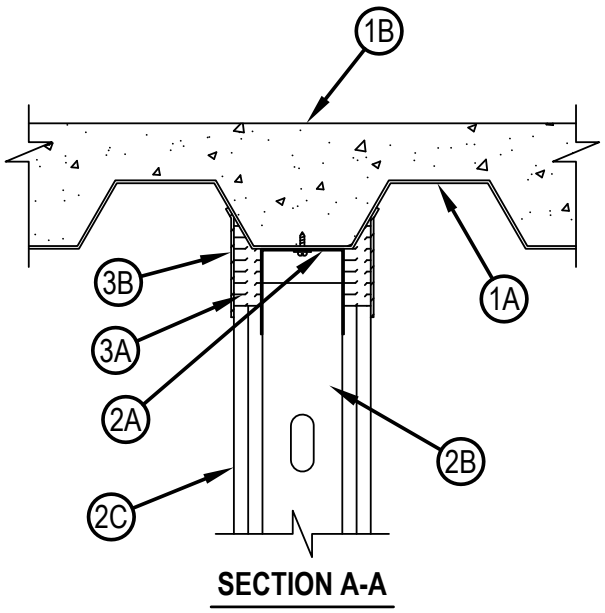

SECTION A-A

1. Floor Assembly — The fire-rated fluted steel deck/concrete floor assembly shall be constructed of the materials and in the manner described in the individual D900 Series Floor-Ceiling Design in the UL Fire Resistance Directory and shall include the following construction features:
   A. Steel Floor and Form Units* — Max 3 in. (76 mm) deep galv steel fluted floor units.
   B. Concrete — Min 2-1/2 in. (64 mm) thick reinforced concrete, as measured from the top plane of the floor units.

1A. Roof Assembly — (Not Shown) — As an alternate to the floor assembly, a fire rated fluted steel deck roof assembly may be used. The roof assembly shall be constructed of the materials and in the manner described in the individual P900 Series Roof-Ceiling Design in the UL Fire Resistance Directory. The hourly rating of the roof assembly shall be equal to or greater than the hourly rating of the wall assembly. The roof assembly shall include the following construction features:
   A. Steel Roof Deck — Max 3 in. (76 mm) deep galv steel fluted roof deck.
   B. Roof Insulation — Min 2-1/4 in. (57 mm) thick poured insulating concrete, as measured from the top plane of the steel roof deck.

Reproduced by HILTI, Inc. Courtesy of
Underwriters Laboratories, Inc.
June 07, 2010

Classified by
Underwriters Laboratories, Inc.
to UL 2079 and CAN/ULC-S115

System No. HW-D-1067

Assembly Ratings — 1 and 2 Hr (See Item 2)
Nominal Joint Width — 2-1/2 In.
Class II Movement Capabilities — 40% Compression or Extension

2. Wall Assembly — The 1 hr or 2 hr fire rated gypsum board /steel stud wall assembly shall be constructed of the materials and in the manner described in the individual U400 or V400 Series Wall and Partition Design in the UL Fire Resistance Directory and shall include the following construction features:
   A. Steel Floor and Ceiling Runners — Floor and ceiling runners of wall assembly shall consist of galv steel channels sized to accommodate steel studs (Item 2B). Flange height of ceiling runner shall be min 1/4 in. (6 mm) greater than max extended joint width.. Ceiling runner centered beneath and parallel with the valley of the deck and secured to valley with steel fasteners, steel masonry anchors or welds spaced max 24 in. (610 mm) OC.
   B. Studs — Steel studs to be min 3-1/2 in. (89 mm) wide. Studs cut 1-1/4 in. to 1-1/2 in. (32 to 38 mm) less in length than assembly height with bottom nesting in and resting on floor runner and with top nesting in ceiling runner without attachment. Stud spacing not to exceed 24 in. (610 mm) OC.
   C. Gypsum Board* — Gypsum board installed to a min total thickness of 5/8 in. (16 mm) or 1-1/4 in. (32 mm) on each side of wall for 1 hr and 2 hr rated assemblies, respectively. Wall to be constructed as specified in the individual Wall and Partition Design in the UL Fire Resistance Directory, except that a max 2-1/2 (64 mm) gap shall be maintained between the top of the gypsum board and the bottom of the steel deck and the top row of screws shall be installed into the studs 5 in. (127 mm) below the lower surface of the floor or roof.
   The hourly rating of the joint system is dependent on the hourly rating of the wall.
3. Joint System — Max separation between bottom of floor or roof and top of gypsum board at time of installation of joint system is 2-1/2 in. (64 mm). The joint system is designed to accommodate a max 40 percent compression or extension from its installed width. The joint system consists of forming material and a fill material, as follows:
   A. Forming Material* — Nom 5/8 in. or 1-1/4 in. (16 or 32 mm) wide strips of min 4 pcf (64 kg/m3) mineral wool batt insulation, for 1 and 2 Hr rated assemblies, respectively. Strips compressed 50 percent in thickness and inserted cut-edge first into gap between top of gypsum board and bottom of the floor or roof deck, flush with both surfaces of the wall. Adjoining lengths of batt to be tightly butted with butted seams spaced min 48 in. (1.2 m) apart along the length of the joint.
   FIBREX INSULATIONS INC — FBX Safing Insulation
   ROCK WOOL MANUFACTURING CO — Delta Board
   ROXUL INC — SAFE
   THERMAFIBER INC — Type SAF
   A1. Forming Material* - Strips — As an alternate to Item 3A, nom 5/8 in.(16 mm) and 1-1/4 in. (32 mm) wide precut mineral wool strips for 1 and 2 hr rated assemblies, respectively. The strips are compressed 50 percent in thickness and inserted cut-edge first into the gap between the top of the gypsum board and the bottom of the floor or roof deck, flush with both surfaces of the wall. Adjoining lengths of strips to be tightly butted with butted seams spaced min 48 in. (1.2 m) apart along the length of the joint.
   HILTI CONSTRUCTION CHEMICALS, DIV OF
   HILTI INC — CP 767 Speed Strips
   B. Fill, Void or Cavity Material* — Min 1/16 in. (1.6 mm) dry thickness (min 1/8 in. or 3.2 mm wet thickness) of fill material sprayed on each side of the wall to completely cover mineral wool forming material and to overlap a min of 1/2 in. (13 mm) onto gypsum board and steel deck on both sides of wall.
   HILTI CONSTRUCTION CHEMICALS, DIV OF
   HILTI INC — CP672 Firestop Spray or CFS-SP WB Firestop Joint Spray

*Bearing the UL Classification Mark

Reproduced by HILTI, Inc. Courtesy of
Underwriters Laboratories, Inc.
June 07, 2010

Classified by
Underwriters Laboratories, Inc.
to UL 2079 and CAN/ULC-S115

System No. HW-D-1068

Assembly Ratings — 1 and 2 Hr (See item 2)
Nominal Joint Width — 2-1/2 in.
Class II Movement Capabilities — 40% Compression or Extension

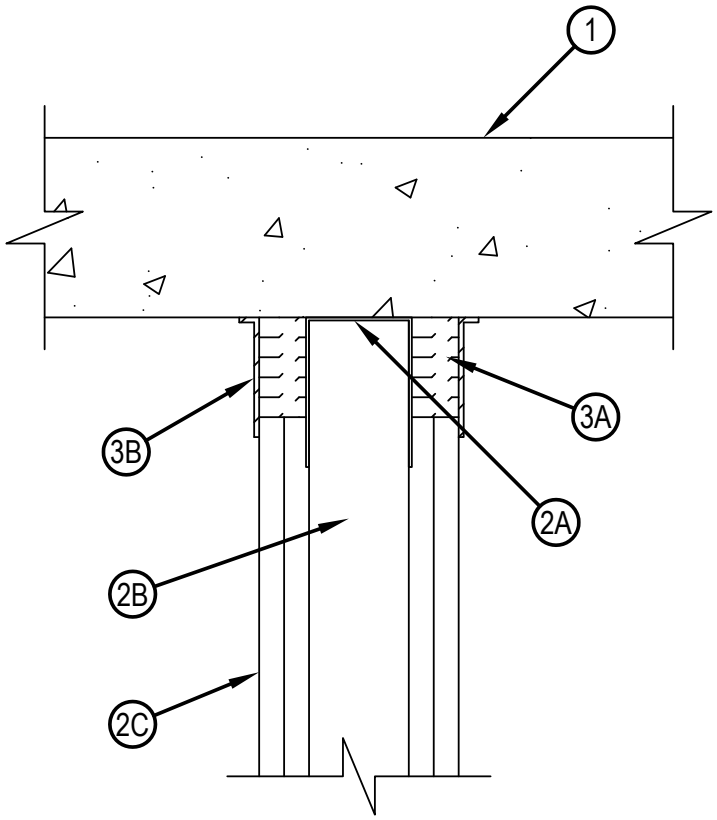

1. Floor Assembly — Min 4-1/2 in. (114 mm) thick steel-reinforced lightweight or normal weight (100-150 pcf or 1600-2400 kg/m3) structural concrete. Floor may also be constructed of any 6 in. (152 mm) thick UL Classified hollow-core Precast Concrete Units*.
   See Precast Concrete Units category in the Fire Resistance Directory for names of manufactures.
2. Wall Assembly — The 1 or 2 hr fire-rated gypsum board /stud wall assembly shall be constructed of the materials and in the manner specified in the individual U400 or V400 Series Wall and Partition Design in the UL Fire Resistance Directory and shall include the following construction features:
   A. Steel Floor and Ceiling Runners — Floor and ceiling runners of wall assembly shall consist of min No. 25 gauge galv steel channels sized to accommodate steel studs (Item 2B). Flange height of ceiling runner shall be min 1/4 in. (6 mm) greater than max extended joint width.. Ceiling runner secured to concrete floor slab with steel fasteners, steel masonry anchors spaced 24 in. (610 mm) OC.
   B. Studs — Steel studs to be min 3-1/2 in. (89 mm) wide. Studs cut 1-1/4 to 1-1/2 in. (32 to 38 mm) less in length than assembly height with bottom nesting in and resting on floor runner and with top nesting in ceiling runner without attachment. Stud spacing not to exceed 24 in. (610 mm) OC .
   C. Gypsum Board* — Gypsum board installed to a min total thickness of 5/8 or 1-1/4 in. (16 or 32 mm) on each side of wall, for 1 or 2 hr fire resistance rated walls, respectively. Wall to be constructed as specified in the individual U400 or V400 Series Design in the UL Fire Resistance Directory, except that a max 2-1/2 in. (64 mm) gap shall be maintained between the top of the gypsum board and the bottom of concrete floor. The screws attaching the gypsum board to the studs shall be located 5 in. (127 mm) from the floor assembly.
   The hourly fire rating of the joint system is dependent on the hourly rating of the wall.

Reproduced by HILTI, Inc. Courtesy of
Underwriters Laboratories, Inc.
June 07, 2010

Classified by
Underwriters Laboratories, Inc.
to UL 2079 and CAN/ULC-S115

System No. HW-D-1068

Assembly Ratings — 1 and 2 Hr (See item 2)
Nominal Joint Width — 2-1/2 in.
Class II Movement Capabilities — 40% Compression or Extension

3. Joint System — Max width of joint (at time of installation of joint system) is 2-1/2in. (64 mm). The joint system is designed to accommodate a max 40 percent compression or extension from its installed width. The joint system shall consist of the following:
   A. Forming Material* — Nom 5/8 or 1-1/4 in. (16 or 32 mm) thick strips of min 4 pcf (64 kg/m3) mineral wool batt insulation, for 1 and 2 hr rated assemblies, respectively. Strips cut to width, compressed 50 percent in thickness and inserted cut-edge first into gap between top of the gypsum board and bottom of the floor assembly, flush with both surfaces of the wall. Adjoining lengths of batt to be tightly butted with butted seams spaced min 48 in. (1.2 m) apart along the length of the joint.
   FIBREX INSULATIONS INC — FBX Safing Insulation
   ROCK WOOL MANUFACTURING CO — Delta Board
   ROXUL INC — SAFE
   THERMAFIBER INC — Type SAF
   A1. Forming Material* - Strips — As an alternate to Item 3A, nom 5/8 in. (16 mm) and 1-1/4 in. (32 mm) wide precut mineral wool strips for 1 and 2 hr rated assemblies, respectively. The strips are compressed 50 percent in thickness and f inserted cut-edge first into gap between top of the gypsum board and bottom of the floor assembly, flush with both surfaces of the wall. Adjoining lengths of strips to be tightly butted with butted seams spaced min 48 in. (1.2 m) apart along the length of the joint.
   HILTI CONSTRUCTION CHEMICALS, DIV OF
   HILTI INC — CP 767 Speed Strips
   B. Fill, Void or Cavity Material* — Min 1/16 in. (1.6 mm) dry thickness (min 1/8 in. or 3.2 mm wet thickness) of fill material sprayed on each side of the wall to completely cover mineral wool forming material and to overlap min 1/2 in. (13 mm) onto the gypsum board and concrete floor assembly.
   HILTI CONSTRUCTION CHEMICALS, DIV OF
   HILTI INC — CP672 Firestop Spray or CFS-SP WB Firestop Joint Spray

*Bearing the UL Classification Mark

Classified by
Underwriters Laboratories, Inc.
to UL 2079 and CAN/ULC-S115

System No. WW-D-0067

Assembly Ratings — 1 and 2 (See Item 1)
Nominal Joint Width — 2 in.
Class II Movement Capabilities — 12.5% Compression or Extension

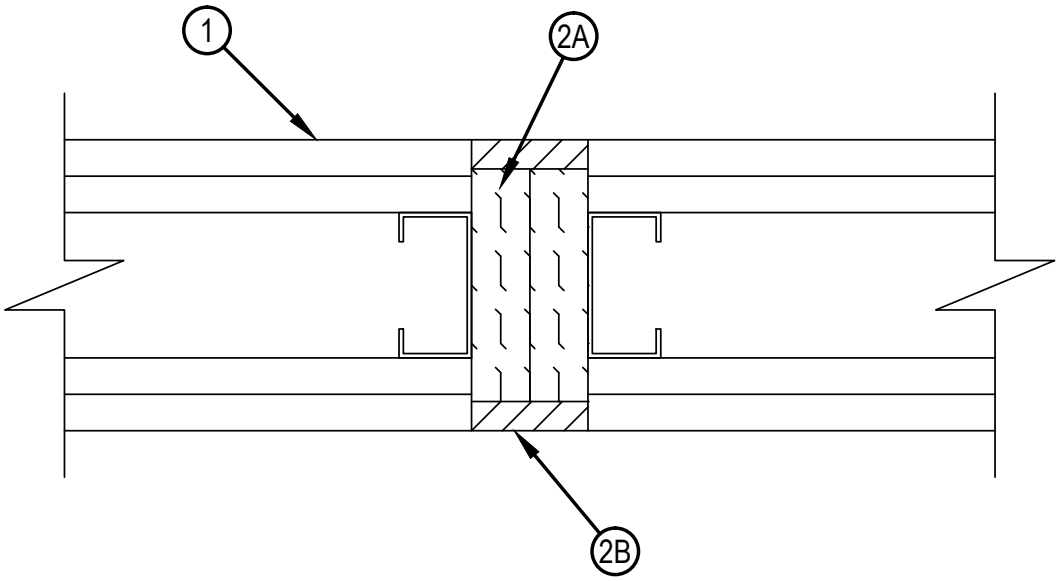

1. Wall Assembly — Nonbearing 1 or 2 hr fire rated gypsum board/steel stud assembly constructed of the materials and in the manner described in the individual U400 or V400 Series Wall or Partition Design in the UL Fire Resistance Directory and shall include the following construction features:
   A. Studs — Min 1-1/2 in. (38 mm) wide steel studs spaced max 24 in. (610 mm) OC.
   B. Gypsum Board* — The gypsum board type, thickness, number of layers, fastener type and sheet orientation shall be as specified in the individual U400 or V400 Series Design in the UL Fire Resistance Directory.
   The hourly assembly rating of the joint system is equal to the hourly fire rating of the wall assembly in which it is installed.
2. Joint System — Max width of joint (at time of installation of joint system) is 2 in. (51 mm) The joint system is designed to accommodate a max 12.5 percent compression or extension from its installed width. The joint system shall consist of the following:
   A. Forming Material* — Min 4.0 pcf (64 kg/m3) mineral wool batt insulation installed in joint opening as a permanent form. Pieces of batt cut to min width of 1-3/4 or 3 in. (44 or 76 mm) for 1 and 2 hr rated assemblies, respectively. Pieces of batt installed edge-first into joint opening, parallel with joint direction, such that batt sections are compressed min 50 percent in thickness and such that the compressed batt sections are recessed from both surfaces of wall to accommodate the required thickness of fill material.
   FIBREX INSULATIONS INC — FBX Safing Insulation
   B. Fill, Void or Cavity Material* - Sealant — Min 1/2 in. (13 mm) thickness of fill material applied within the joint, flush with both surfaces of wall.
   HILTI CONSTRUCTION CHEMICALS, DIV OF HILTI INC — CP606 Flexible Firestop Sealant

*Bearing the UL Classification Mark

Hilti Firestop Systems

Reproduced by HILTI, Inc. Courtesy of
Underwriters Laboratories, Inc.
February 06, 2014

Design No. CEJ 127 P (HI/JS 120-05)

PERIMETER FIRE BARRIER SYSTEM

Hilti, Inc.

ASTM E 2307

Table 1

	FIRESTOP JOINT SPRAY CFS-SP WB	SILICONE JOINT SPRAY CFS-SP SIL
F-RATING	2-HR.	2-HR.
T-RATING	2-HR.	2-HR.
APPLICATION THICKNESS	1/8" WET FILM (1/16" DRY)	2mm (0.079") WET FILM
CYCLING (%) HORIZONTAL VERTICAL SEE ITEM 3A	NONE ±6.25 (25% COMPRESSION)	NONE ±6.25 (25% COMPRESSION)

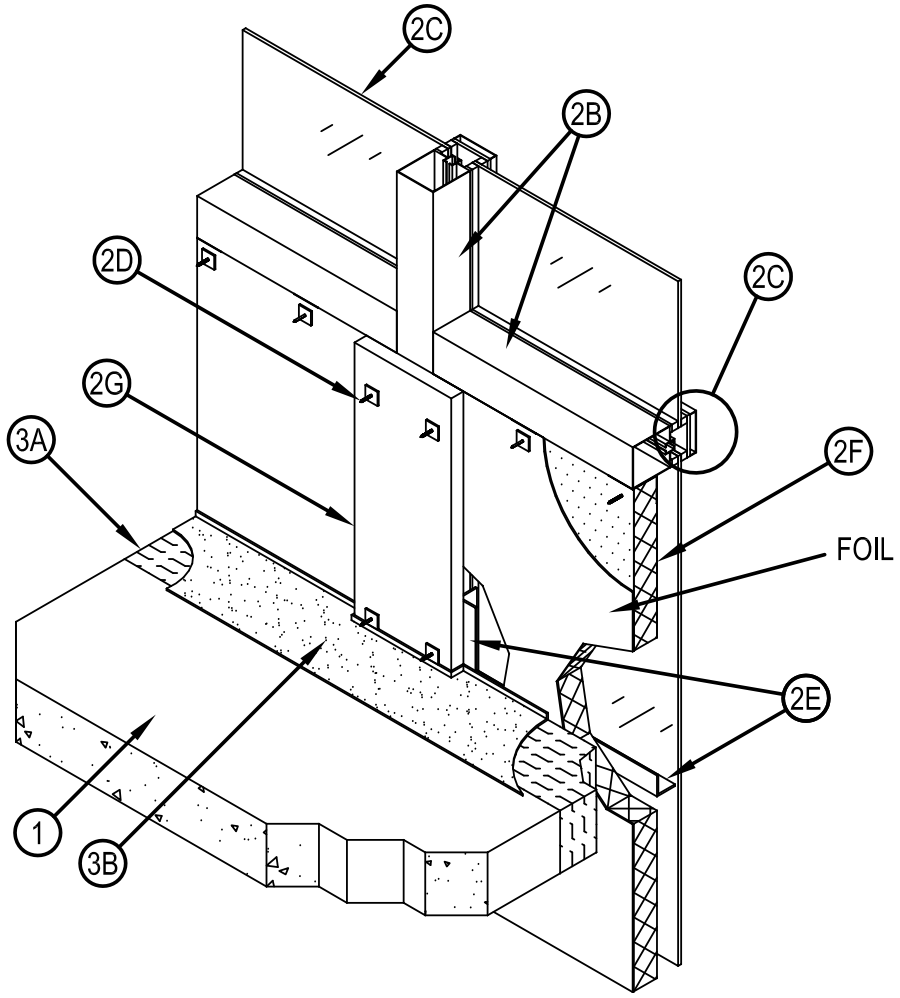

Design No. CEJ 127 P (HI/JS 120-05)

1. CONCRETE FLOOR ASSEMBLY: Max. two-hour rated concrete floor assembly made from either lightweight or normal weight concrete with a density of 100-150 pcf, with a min. thickness of 4-1/2 in. at the joint face. Overall slab thickness may vary to accommodate various blockout depths (longitudinal recesses) formed in the concrete, to house the architectural cover plate. The blockout width may also vary without restriction.
2. CURTAIN WALL ASSEMBLY: Incorporate the following features:
   A. Mounting Attachment: (Not shown) Attach the curtain wall framing to the structural framing in accordance to the curtain wall manufacturer's instructions. When required, connect the mounting attachments to the joint face of the floor slab, in accordance to the curtain wall manufacturer's instructions. Max. distance between mounting attachments is 10 ft.
   B. Aluminum Framing: Size rectangular aluminum tubing mullions and transoms according to the curtain wall system manufacturer's guidelines. Min. overall dimensions of framing required is 0.100 in. thick aluminum with a min. 3-3/4 in. height and a min. of 2-1/2 in. width of the extrusion. Mullion and Transom covers are added to the external side of the framing, giving the framing system a total mullion depth of nom. 5-1/4 in. (with cover plate). Mullions are to be spaced a min. 60 in. on center (oc) and spandrel transoms are to be spaced a min. 45 in. oc Spandrel transoms are to be located at a min. height 20 in. above the top surface of the concrete floor assembly (as measured from the bottom of the transom).
   C. Glass Panels: Size and install glass panels to curtain wall framing according to the curtain wall system manufacturer's guidelines. Use min. 1/4 in. thick clear, heat-strengthened (HS) glass with a max. width and height less than the aluminum framing o.c. spacing, which allows the glass to be secured between the notched shoulder of the aluminum framing and pressure bar. Secure panels with a thermal break (rubber extrusion), pressure bar (aluminum extrusion), min. 1/4-20 x 5/8 in. long screws, and a snap face (aluminum extrusion).
   D. Impaling Pins: Size and install min. 12 GA steel pins according to the curtain wall system manufacturer's guidelines, or be a min. 1/2 in. longer than the thickness of the curtain wall insulation. Attach pins to clip angles with typical clip dimensions of: nom. 2 in. by 2 in., constructed with 20 GA galvanized sheet steel. Secure the clips to the aluminum framing with No. 10 self-tapping sheet metal screws. Install a min. of 1 screw per clip angle. Space pins max. of 12 in. oc on the vertical framing members and a max. of 20 in. o.c on the horizontal framing member above the slab. The interior face of the curtain wall insulation is to be installed so that it is flush with the interior face of the framing.
   E. Reinforcing Angle: Mount a min. 1-1/2 in. x 1-1/2 in. x 20 GA galvanized steel angle to the inside of the vertical framing members so that the vertical leg serves as a backer to the exterior face of the curtain wall insulation and the horizontal leg extends away from the curtain wall insulation. Locate the reinforcing angle at the elevation of the centerline of the perimeter joint treatment. Size the angle 12 in. longer than the span between the interior edges of the vertical framing members and form the angle so that it has a 6 in. vertical leg on each end. Secure the 6 in. leg to the framing member on each side with three No. 10 steel self-tapping sheet metal screws placed in a triangular fashion with a max. spacing of 2 in. oc
   F. Curtain Wall Insulation: Install nom. 2 in. thick 8 pcf density mineral wool batt insulation faced on one side with aluminum foil scrim (vapor retarder), which is exposed to the room interior. Secure with angle clips and impaling pins (Item 2D). Seal all meeting edges of insulation with nom. 4 in. wide pressure sensitive aluminum foil faced tape centered over the junction so that approx. 2 in. of tape covers each edge of the adjacent insulation. The interior face of the batt insulation is, if required compressed, flush with the interior face of the curtain wall framing creating a min. 1 in. air space between the insulation and the glass.
   Listed Manufacturer:
   Only Intertek Certified Mineral Wool Manufacturer's product meeting the above min. requirements.
   G. Framing Covers: Install nom. 1 in. thick, 8 in. wide strips of 8 pcf density mineral wool batt insulation faced on one side with aluminum foil scrim (vapor retarder), which is exposed to the room interior. Center framing covers over each vertical framing member and secured to the member with impaling pins and clips (Item 2D) spaced a min. 1 in. from both edges, and a max 12 in. oc Framing covers below the perimeter joint treatment are nom. 2 in. thick, and those above the perimeter joint treatment are nom. 1 in. thick. Framing covers do not pass through the perimeter joint treatment. They are butted to the top and bottom surfaces of the perimeter joint treatment.
   Listed Manufacturer:
   Only Intertek Certified Mineral Wool Manufacturer's product meeting the above min. requirements.

Design No. CEJ 127 P (HI/JS 120-05)

3. PERIMETER JOINT PROTECTION: The perimeter joint (linear opening) is not to exceed nom. 6 in. joint width (joint width at installation). Incorporate the following construction features:

A. Packing Material: Install min. 4 in. thick, 4 pcf density, mineral wool batt insulation** with the fibers running parallel to the slab edge and curtain wall. Compress the packing material 25% in the nominal joint width. Compress the batt insulation into the perimeter joint such that the top surface of the batt insulation is flush with the top surface of the concrete floor slab and its mid depth is compressed against the interior surface of the curtain wall insulation (Item 2F) which is supported by the 20 GA steel reinforcing angle (Item 2E). Splices (butt joints) in the lengths of mineral wool batt insulation are to be tightly compressed together.

Listed Manufacturer:

Only Intertek Certified Mineral Wool Manufacturer's product meeting the above min. requirements.

B. CERTIFIED MANUFACTURER: Hilti, Inc.

CERTIFIED PRODUCT: Joint Spray or Sealant

MODEL: Firestop Joint Spray CFS-SP WB or Silicone Joint Spray CFS-SP SIL

Fill, Void or Cavity Material: To be applied (sprayed, brushed, or troweled) to cover the top exposed surface of the mineral wool installed in the perimeter joint. Apply at the thickness specified in Table 1 and overlap the material a min. 1/2 in. onto the adjacent curtain wall assembly and concrete floor slab assembly. If spraying process is stopped and the applied material cures to an elastomeric film before the process is restarted, then overlap the edge of the cured material at least 1/8 in. with the spray.

** Before testing, the test specimen was cycled 500 times at 30 cpm in accordance to ASTM E 1399.

Reproduced by HILTI, Inc.
Courtesy of Intertek Group
June 20, 2014

Intertek

Design No. CEJ 307 P (HI/BP 180-01)

PERIMETER FIRE BARRIER SYSTEM

Hilti, Inc.

ASTM E 2307

Table 1

	FIRESTOP JOINT SPRAY CFS-SP WB	SILICONE JOINT SPRAY CFS-SP SIL
F-RATING	3-HR.	3-HR.
T-RATING	1 3/4-HR.	1 3/4-HR.
APPLICATION THICKNESS	1/8" WET FILM (1/16" DRY)	2mm (0.079") WET FILM
CYCLING (%) HORIZONTAL VERTICAL SEE NOTE 1	± 11.25 ± 5	± 7.5 ± 5

L-Rating <1.0 SCFM/LF

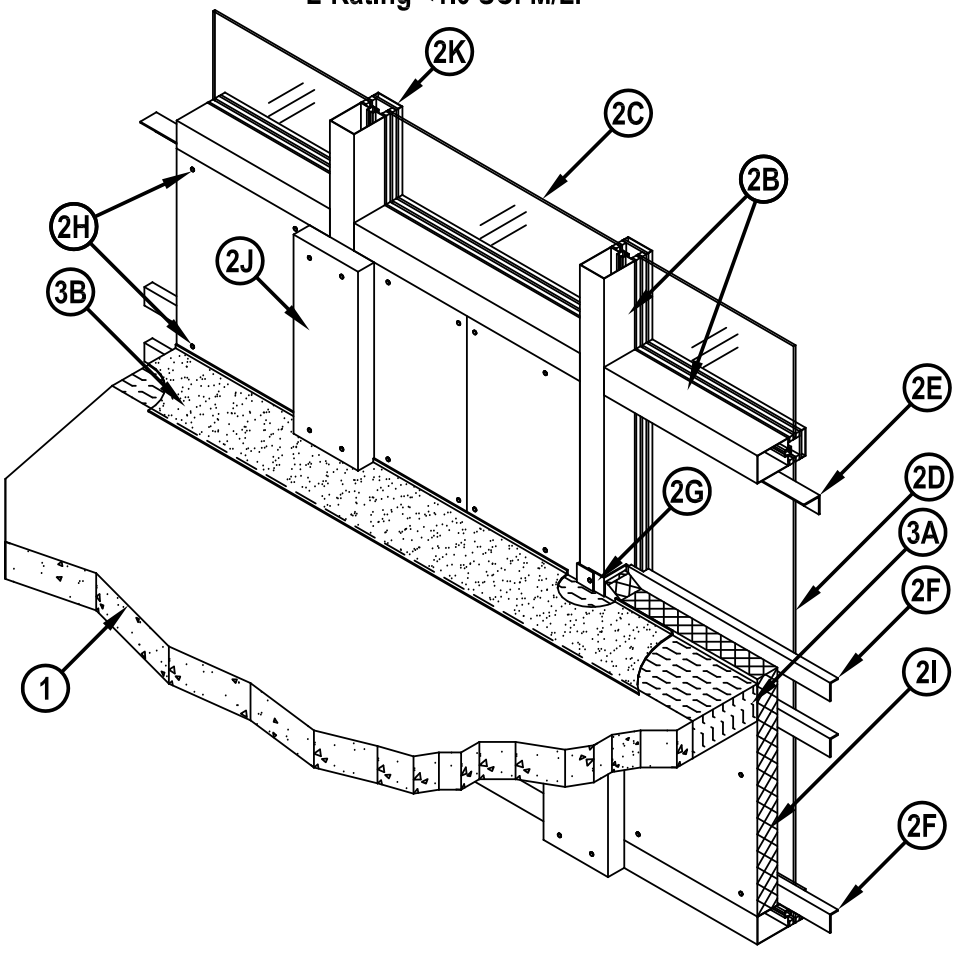

Hilti Firestop Systems

Reproduced by HILTI, Inc.
Courtesy of Intertek Group
June 20, 2014

Intertek

Design No. CEJ 307 P (HI/BP 180-01)

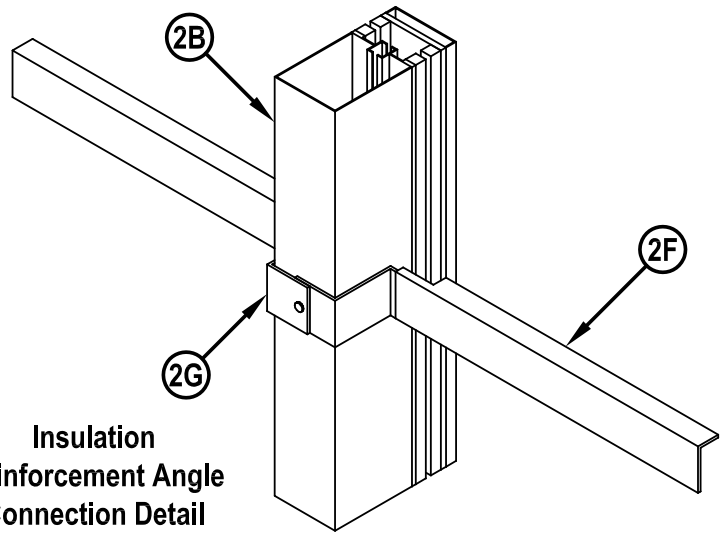

Insulation Reinforcement Angle Connection Detail

1. CONCRETE FLOOR ASSEMBLY: Two-hour rated concrete floor assembly made from either lightweight or normal weight concrete with a density of 100-150 pcf, with a min. thickness of 4-1/2 in. at the joint face. Overall slab thickness may vary to accommodate various blockout depths (longitudinal recesses) formed in the concrete, to house the architectural cover plate. The blockout width may also vary without restriction.
2. CURTAIN WALL ASSEMBLY: The curtain wall assembly shall incorporate the following construction features:
   A. Mounting Attachment: (Not shown) Attachment of the curtain wall framing to the structural framing shall be according to the curtain wall manufacturer's instructions to allow vertical shear movement only. When required, the mounting attachments to the floor slab shall be connected to the joint face of the floor slab, according to the curtain wall manufacturer's instructions. Max. distance between mounting attachments shall be 10 feet. One optional method is to use min. 8 in. wide by 3/4 in. thick extruded aluminum Halfen mullion mounting brackets with one nom. 2 in. high leg for support and attachment to the mullion and with one leg at least 6 in. longer than nominal joint width. Attach the mounting bracket to the top of the floor with two min. 1/2 in. dia. steel masonry anchors in conjunction with washer plates supplied with the mounting brackets.
   B. Aluminum Framing: Rectangular aluminum tubing mullions and transoms, sized according to the curtain wall system manufacturer's guidelines. Min. overall dimensions of the extruded framing sections are 0.100 in. thick aluminum with a min. 5-1/4 in. depth and a min. of 2-1/2 in. width. Mullion and Transom covers are added to the external side of the framing, giving the framing system a total depth of min. 6-3/4 in. Mullions are to be spaced a min. 56-1/2 in. on center (oc) and transoms are to be spaced a min. 49 in. oc For the spandrel region, the lower transom must be placed a min. of 21 in. below the concrete floor (as measured from the underside of the floor to the top side of the transom) and the upper transom must be placed a min. of 21-1/2 in. above the floor (as measured from the top surface of the floor to the underside of the transom) while maintaining the min. 46-1/2 in. spandrel panel height. One optional fastening method is to space the mullions as noted herein and secure the mullion mounting anchors (Item 2A) at each floor level in conjunction with extruded aluminum clips bolted to the sides of the mullions and designed to engage the vertical leg of the Halfen mullion mounting bracket in conjunction with an extruded aluminum hook/leveling connector.
   C. Vision Glass Panels: Glass panels shall be sized and attached to curtain wall framing according to the curtain wall system manufacturer's guidelines. Use a min. 1/4 in. thick, clear heat-strengthened (HS) glass or tempered glass with a max. width and height less than the aluminum framing o.c. spacing, which allows the glass to be secured between the notched shoulder of the aluminum framing and pressure bar. Panels are secured with a thermal break (rubber extrusion), pressure bar (aluminum extrusion), min. 1/4-20 x 5/8 in. long screws, and a snap face (aluminum extrusion).

Design No. CEJ 307 P (HI/BP 180-01)

D. Spandrel Panels: Either glass or aluminum spandrel panels may be applied to the spandrel exterior: If Glass Spandrel Panels: Glass panels shall be sized and installed to curtain wall framing according to the curtain wall system manufacturer's guidelines. Use a min. 1/4 in. thick clear, heat-strengthened (HS) glass or tempered glass with a max. width and height less than the aluminum framing o.c. spacing, which allows the glass to be secured between the notched shoulder of the aluminum framing and pressure bar. Panels are secured with a thermal break (rubber extrusion), pressure bar (aluminum extrusion), min. 1/4-20 x 5/8 in. long screws, and a snap face (aluminum extrusion). Aluminum Spandrel Panels: Aluminum panels used in the spandrel shall be sized and attached to curtain wall framing according to the curtain wall system manufacturer's guidelines. Use a min. 1/8 in. sheet aluminum panel.

E. Insulation Retainer Angle: Secure a minimum 2 in. x 2 in. 20 GA galvanized steel angle to the underside of the top spandrel transom extending the full length of the transom between each vertical framing member. Position so that the curtain wall insulation (2I), when placed flush against the back surface of the angle, is flush with the internal surface of the vertical framing members. Secure the angle to the transom with min. 1 in. No. 10 self-tapping sheet metal screws spaced a maximum 12 in. o.c.

F. Insulation Reinforcement Angle: Place min. 1 in. x 2 in. 20 GA galvanized steel angle horizontally in the spandrel area to reinforce the curtain wall insulation (2I). The 2 in. leg is placed flush against the exterior surface of the curtain wall insulation and the 1 in. dimension is positioned at the top of the 2 in. leg, perpendicular to and outward from the insulation as illustrated. Place a minimum of 3 angles in each spandrel cavity between vertical framing members. Two angles are required to be spaced a max. 6 in. o.c. in the perimeter fire barrier region, with the top angle centered 1 in. above the floor. Outside of the perimeter fire barrier region, the spacing of these reinforcement angles is a max. 18 in oc On both ends of each angle, cut the 1 in. leg of the angle 2 in. from the end and fold down to form a slot that is slid onto the flange of the Z-Clip (2G).

G. Z Clips: Position min. 2 in. wide Z-Clips having 2 in. long web and flange dimensions, constructed of min. 18 GA. galvanized steel, onto the mullion at the required elevation locations of the Insulation Reinforcement Angles (2F). Two Z-Clips are to be positioned at each location so that one clip extends on each side of the mullion, placed tightly against the mullion. The Z-clips are secured to the interior face of the mullion with a single 1 in. No. 10 self-tapping sheet metal screw placed at the center of the Z-Clips.

H. Insulation Retaining Screws: In the field of the curtain wall insulation between framing covers (2J) attach curtain wall insulation (2I) to the insulation retainer angle (2E) and insulation reinforcement angle (2F) with min. 3 in. long No. 8 bugle head self-tapping screws fitted with min. 1-1/2 in. diameter steel clinch shields or self-locking washer clips. These are spaced a max. 12-3/4 in. oc and a max. 4 in. on each side of vertical seams. Where the framing covers (2J) overlap onto the curtain wall insulation (2I) secure framing covers (2J) and curtain wall insulation (2I) to the insulation retainer angle (2E) and insulation reinforcement angle (2F) with min. 5 in. long No. 10 bugle head self-tapping screws and min. 1-1/2 in. diameter steel clinch shields or self-locking washer clips in accordance with details in 2J.

I. Curtain Wall Insulation: A nom. 2 in. thick, 8pcf density mineral wool batt insulation**, faced on one side with aluminum foil scrim (vapor retarder) which faces the room interior, is installed to fill all cavities of the spandrel region between the framing. The batt is to be fitted tightly to the framing, and is secured to the Insulation Retainer Angle (2E) and Insulation Reinforcement Angle (2F) with Insulation Retaining Screws and min. 1-1/2 in. diameter steel clinch shields or self-locking washer clips. (2H). A minimum 3 in. air space is created between the insulation and panel. All meeting edges of insulation are sealed with nom. 4 in. wide pressure sensitive aluminum foil faced tape centered over the junction so that approx. 2 in. of tape covers each edge of the adjacent insulation. The 36 in. wide batts shall be installed with a maximum of 1 vertically oriented seam in each spandrel cavity, between vertical framing members, spaced a min. 18 in. from any vertical framing member, and continuous vertically without horizontal seams.

J. Framing Covers: Strips made of 2 in. thick by 8 in. wide, 8 pcf, mineral wool batt insulation, faced one side with aluminum foil scrim (vapor retarder) which faces the room interior, are centered over each vertical framing member and secured to the Insulation Retainer Angle (2E) and Insulation Reinforcement Angle (2F) with Insulation Retaining Screws spaced 1 in. from both edges of the framing cover. Framing covers do not pass through the perimeter joint treatment. They are butted to the top and bottom surfaces of the perimeter joint treatment.

K. Panel Attachment: Secure panels with a thermal break (thermal-set rubber extrusion), pressure bar (aluminum extrusion), 1/4-20 x 5/8 in. long screws, and a snap face (aluminum extrusion). The spandrel panels shall be insulated according to 2I.

Reproduced by HILTI, Inc.
Courtesy of Intertek Group
June 20, 2014

Intertek

Design No. CEJ 307 P (HI/BP 180-01)

3. PERIMETER JOINT PROTECTION: The perimeter joint (linear opening) shall not exceed an 8- in. nom. joint width (joint width at installation) and the perimeter joint treatment shall incorporate the following construction features:

A. Packing Material: Use a min. 4 in. thick, 4 pcf density, mineral wool** batt insulation installed with the fibers running parallel to the slab edge and curtain wall. The packing material shall be compressed 33% in the nominal joint width. Compress the batt insulation into the perimeter joint such that the top surface of the batt insulation is flush with the top surface of the concrete floor slab. Splices (butt joints) in the lengths of mineral wool batt insulation are to be tightly compressed together with min. compression of 0.25 in. per piece. Reference the Introduction to Fire Resistive Joint Systems Section of this Directory for more details on how to determine the cut width of the insulation to be installed in the nominal joint width, and how to determine the compressed percentage of a known insulation width installed in a known nominal joint width.

B. CERTIFIED MANUFACTURER: Hilti, Inc.

CERTIFIED PRODUCT: Joint Spray or Sealant

MODEL: Firestop Joint Spray CFS-SP WB or Silicone Joint Spray CFS-SP SIL

Fill, Void or Cavity Material: To be applied (sprayed, brushed, or trowled) to cover the exposed surface of the mineral wool installed in the perimeter joint. Apply at the thickness specified in Table 1 and overlap the material a min. 1/2 in. onto the adjacent curtain wall assembly and concrete floor slab assembly. If the spraying process is stopped and the applied liquid cures to an elastomeric film before process is restarted, then overlap the edge of the cured material at least 1/8 in. with the spray. Reference Product Section of this Directory for more details about the Listed product.

Note 1 – Before testing, the spliced test specimen was cycled 500 times at 30 cpm according to ASTM E 1399 and ICBO ES AC 30 (Jan. 1997)

(** Product Certified by Intertek Testing Services bearing a WH Mark)

This Design Listing was created using the information outlined in the Introduction to the Fire-Resistant Joint Systems Section. Please refer to that Introduction to complement the Design Listing.

Reproduced by HILTI, Inc.
Courtesy of Intertek Group
June 20, 2014

System No. CEJ 400 P (HI/BP 120-02)

PERIMETER FIRE BARRIER SYSTEM - ASTM E 2307

	CP 672 SPEED SPRAY	CP 672 FAST CURE	CFS-SP WB
F-RATING	2-HR.	2-HR.	2-HR.
T-RATING	0-HR. OR 1-HR. (SEE ITEM 2C)	0-HR. OR 3/4-HR. (SEE ITEM 2C)	0-HR. OR 1-HR. (SEE ITEM 2C)

L-RATING < 1 SCFM

Rated for ± 9.5% Horizontal Movement (See Note 1)

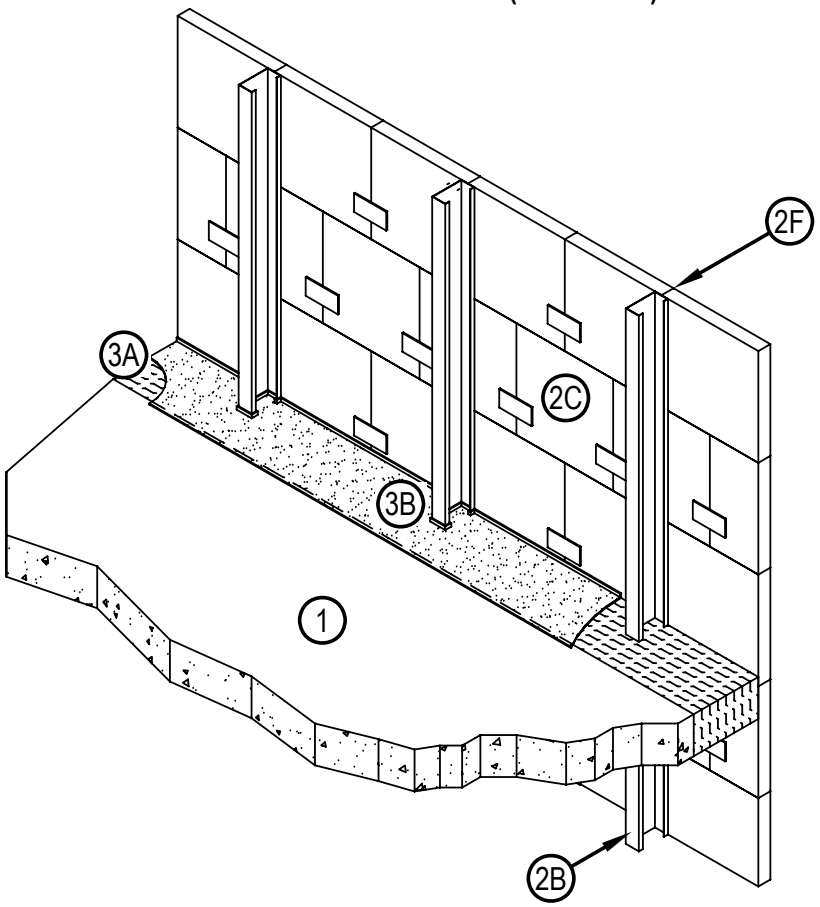

1. CONCRETE FLOOR ASSEMBLY: Minimum two-hour rated concrete floor assembly made from either lightweight or normal weight concrete with a density of 100-150 pcf, with a min. thickness of 4-1/2-in. at the joint face. Optional – Provided the two-hour concrete floor assembly rating is not compromised, the overall slab thickness may vary to accommodate various blockout depths (longitudinal recesses) formed in the concrete, to house an optional architectural joint system. The blockout width may also vary without restriction.
2. CURTAIN WALL ASSEMBLY: The curtain wall assembly shall incorporate the following construction features:
   A. Mounting Attachment: (Not shown) Attachment of the curtain wall framing to the structural framing shall be according to the curtain wall manufacturer's instructions. When required, the mounting attachments to the floor slab shall be connected to the joint face of the floor slab, according to the curtain wall manufacturer's instructions. Max. distance between mounting attachments shall be 10 feet.
   B. Steel-Stud Framing: Vertical framing members shall be a min. 3-5/8-inch by 1-5/8-inch, 18 GA steel "C" studs secured in an 18 GA steel track top and bottom using min. #6 x 1.25-inch Bugle head SD PT screws. Vertical framing shall not exceed a spacing of 56-inches o.c. and shall be completely covered by the GFRC panels (2c). Attachment of vertical framing shall be according to the curtain wall system manufacturer's guidelines.

System No. CEJ 400 P (HI/BP 120-02)

PERIMETER FIRE BARRIER SYSTEM - ASTM E 2307

	CP 672 SPEED SPRAY	CP 672 FAST CURE	CFS-SP WB
F-RATING	2-HR.	2-HR.	2-HR.
T-RATING	0-HR. OR 1-HR. (SEE ITEM 2C)	0-HR. OR 3/4-HR. (SEE ITEM 2C)	0-HR. OR 1-HR. (SEE ITEM 2C)

L-RATING < 1 SCFM

Rated for ± 9.5% Horizontal Movement (See Note 1)

C. GFRC Panels: Glass fiber reinforced concrete panels shall be at least 1 inch thick and attached in accordance with the manufacturer's installation instructions. The system is a monolithic assembly without expansion or control joints. NOTE: T-Rating is 0-hours when minimum 1 inch thick GFRC panels are used. T-Rating is 1-hour or 45 minutes when minimum 2 inch thick GFRC panels are used.

D. Impaling Pins: (Not Shown - Optional) When required by insulation manufacturer, use with insulation. The pins shall be located, sized and installed according to the curtain wall system manufacturer's guidelines.

E. Curtain Wall Insulation: (Not Shown - Optional) Curtain wall insulation is not required. However, it can be installed above or below the perimeter joint protection. When used, secure the insulation in accordance with the manufacturer's installation instructions. Mineral wool** or glass fiber** batt insulations are acceptable.

F. GFRC Panel Joint: Vertical and horizontal concrete panel joints created between panels can be either flush type (butt joint) or key way type (tongue and groove). Concrete panel edges must be in contact with each other. If required, the surface of the panel joints can be sealed with gaskets or sealants.

G. Framing Covers: (Not Shown - Optional) Framing covers used over the mullions and transoms are optional. When used, the framing covers shall be located, sized and installed according to the curtain wall system manufacturer's guidelines. Framing covers do not pass through the perimeter joint treatment. They are butted to the top and bottom surfaces of the perimeter joint treatment without deforming it. Either mineral wool** or fiberglass batt insulation** may be used.

3. PERIMETER JOINT PROTECTION: The perimeter joint (linear opening) shall not exceed an 8 in. nom. joint width (joint width at installation) and the perimeter joint treatment shall incorporate the following construction features:

A. Packing Material: Use a min. 4 in. thick, 4 pcf density, mineral wool batt insulation** installed with the fibers running parallel to the slab edge and curtain wall. The packing material shall be compressed 50% in the nominal joint width. Compress the batt insulation into the perimeter joint such that the top surface of the batt insulation is flush with the top surface of the concrete floor slab. Splices (butt joints) in the lengths of mineral wool batt insulation are to be tightly compressed together. Reference the Introduction to Fire Resistive Joint Systems Section of this Directory for more details on how to determine the cut width of the insulation to be installed in the nominal joint width, and how to determine the compressed percentage of a known insulation width installed in a known nominal joint width.

B. CERTIFIED MANUFACTURER: Hilti, Inc.
CERTIFIED PRODUCT: Joint Spray or Sealant
MODEL: CP 672 Speed Spray or CP 672 Fast Cure or CFS-SP WB Firestop Joint Spray
Fill, Void or Cavity Material: To be applied (sprayed, brushed, or painted) to cover the exposed surface of the mineral wool installed in the perimeter joint. Apply a min. 1/8-in. wet film thickness, which must become a min. 1/16-in. dry film thickness, and overlap the material a min. 1/2 in. onto the adjacent curtain wall assembly and concrete floor slab assembly. If the spraying process is stopped and the applied liquid cures to an elastomeric film before process is restarted, then overlap the edge of the cured material at least 1/8 in. with the spray. Reference Product Section of this Directory for more details about the Listed product.

C. Support Clips: (Not Shown - Optional) Use standard Z-shaped clips that are min. 20 GA galvanized steel with the following nom. dimensions: 1 in. wide by 3 in. high with a 2 in. upper leg and 3 in. lower leg Note 1 – Before testing, the spliced test specimen was cycled 500 times at 30 cpm according to ASTM E 1399 and ICBO ES AC 30 (Jan. 1997)

(** Product Certified by Intertek Testing Services bearing a WH Mark)

Classified by
Underwriters Laboratories, Inc.
to ASTM E2307

System No. CW-D-2027

F Rating — 2 Hr
T Rating — 1/4 Hr
Integrity Rating — 2 Hr
Insulation Rating — 1/4 Hr
Linear Opening Width — 8 In. Max
Class II Movement Capabilities — 5% Vertical Shear (See Item 3)

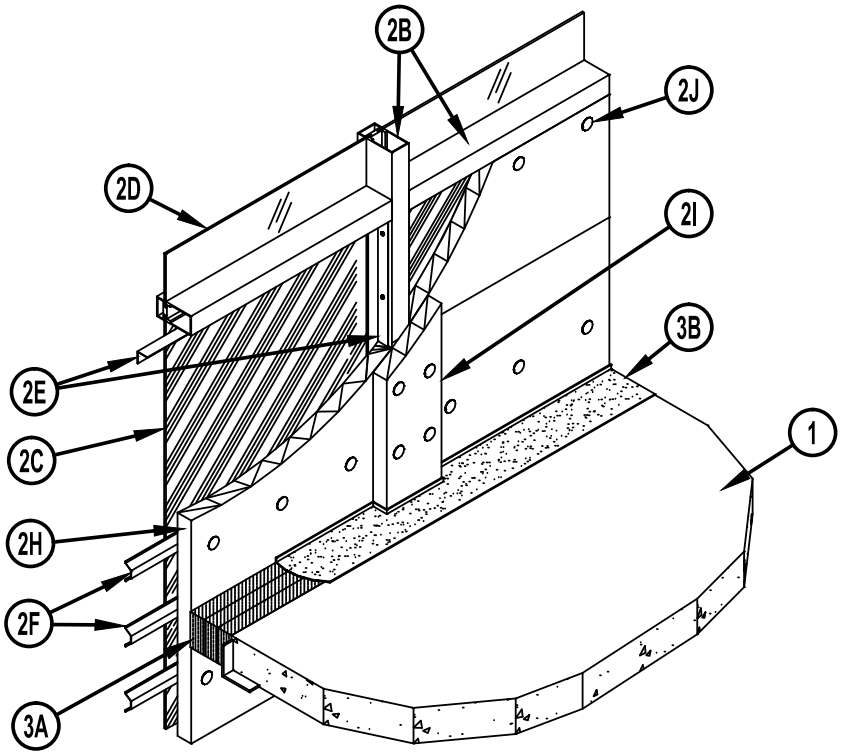

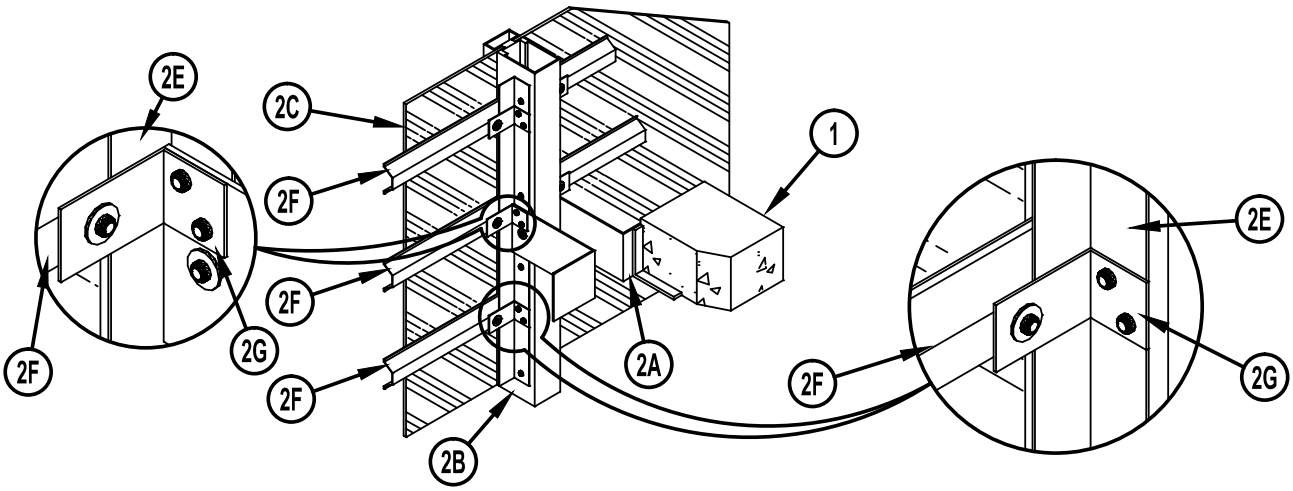

Hilti Firestop Systems

Reproduced by HILTI, Inc. Courtesy of
Underwriters Laboratories, Inc.
May 30, 2014

System No. CW-D-2027

1. Floor Assembly — Min 4-1/2 in. (114 mm) thick reinforced lightweight or normal weight (100-150 pcf or 1600-2400 kg/m3) structural concrete. Perimeter of floor assembly to be provided with min 4 by 4 by 1/4 in. thick cast-in-place structural steel angle for weld-attachment of mullion mounting clips (Item 2A).
2. Curtain Wall Assembly — The curtain wall assembly shall incorporate the following construction features:
   A. Mullion Mounting Clips — Min 4 in. (102 mm) long angles with one nom 4 in. (102 mm) leg for attachment to edge of floor assembly and with one leg approx 4 in. (102 mm) longer than distance to nearest face of mullion. Clips welded to steel angle at edge of floor assembly (Item 1) on each side of vertical mullion (Item 2B) at each floor level. Each clip to be provided with elongated holes to accommodate designed amount of movement. Top edge of each mounting angle to be recessed min 3/4 in. (19 mm) below top surface of floor.
   B. Framing — The rectangular tubing mullions (vertical members) and transoms (horizontal members) shall be min 2-1/2 in. (64 mm) wide by 5 in. (127 mm) deep and shall be formed from min 0.100 in. (2.5 mm) thick aluminum. Mullions spaced max 60 in. (1524 mm) OC and secured to mullion mounting clips (Item 2A) at each floor level with two 1/2 in. (13 mm) diam by 4 in. (102 mm) long hex head steel bolts in conjunction with steel nuts and washers. Interior face of mullions to be max 8 in. (203 mm) from edge of floor assembly. Transoms framing top and bottom edges of spandrel panels (Item 2C) to be spaced min 72 in. (1829 mm) OC. Transom forming sill of vision panel (Item 2D) to be located such that its bottom surface is at height of 33 in. (838 mm) above the top surface of the floor (Item 1).
   C. Spandrel Panels — Nom 1/4 in. (6 mm) thick opaque heat-strengthened glass, nom 1/8 in. (3.2 mm) thick aluminum panels with 1/4 in. (6 mm) thick edges or nom 1-3/16 in. (30 mm) thick polished granite spandrel panels with 1 in. (25 mm) thick gauged edges. Each panel secured in position with aluminum pressure plates in conjunction with gaskets and steel screws.
   D. Vision Panels — Nom 1/4 in. (6 mm) thick transparent heat-strengthened glass. Each panel secured in position with aluminum pressure plates in conjunction with glazing gaskets and steel screws.
   E. Spandrel Panel Perimeter Angles — Nom 1-1/2 by 1-1/2 in. (38 by 38 mm) No. 22 gauge galvanized steel angles installed around entire perimeter of each spandrel panel. Angles recessed from interior face of framing as necessary to accommodate thickness of curtain wall insulation (Item 2H). Angles notched as necessary to be continuous over mullion mounting clips (Item 2A). Angles screw-attached to mullions and transom along sides and top of each spandrel panel with No. 10 by 1/2 in. (13 mm) long self-drilling, self-tapping steel screws spaced max 12 in. (305 mm) OC. Angle along bottom of each spandrel panel to be screw-attached to leg of angle on mullion at each end without any direct attachment to transom.
   F. Stiff Back Channel — Nom 2-1/2 in. (64 mm) wide by 7/8 in. (22 mm) deep hat-shaped channel formed of 22 gauge galv steel to be installed to stiffen curtain wall insulation between mullions above, below and at elevation of safing joint. One stiff back channel to be located with its centerline approx 6 in. below floor and one stiff back channel to be located with its centerline approx 6 in. above floor. A third stiff back channel is to be located near the midheight of the safing joint. A clearance of 1/4 to 1/2 in. (6 to 13 mm) shall be maintained between the ends of the stiff back channels and the mullions. Stiff back channel secured to mullion at each end with channel attachment clip (Item 2G) in conjunction with a No. 8 by 1/2 in. (13 mm) long self-drilling, self-tapping wafer head steel screw or a 3/16 in. diam steel bolt with nut and washer.
   G. Channel Attachment Clips — Nom 1-1/2 by 2-1/2 by 1-1/2 in. (38 by 64 by 38 mm) long angle formed of 16 gauge galv steel. The 2-1/2 in. (64 mm) leg is provided with a 1/4 in. (6 mm) wide by 1-1/2 in. (38 mm) long slot along its centerline for attachment of the stiff back channel. Clips secured to mullions mounting clips (Item 2A) and mullions, through perimeter angles, with two No. 10 by 1/2 in. (13 mm) long self-drilling, self-tapping steel screws. Channel attachment clips attached to mullion mounting clips to be provided with elongated holes to accommodate designed amount of movement. Channel clips installed with 2-1/2 in. (64 mm) leg recessed from interior face of mullion to accommodate thickness of curtain wall insulation (Item 2H).

System No. CW-D-2027

H. Curtain Wall Insulation* — Min 2 in. (51 mm) thick mineral wool board insulation, unfaced or faced on one side with aluminum foil/scrim vapor retarder, supplied in min 36 in. (914 mm) wide boards. Insulation boards to be installed with no vertical seams. A full-width board shall be centered at the midheight of floor and tightly fitted between vertical mullions, flush with interior surface of framing. The centered board shall be secured to the stiff back channels (Item 2F) located approx 6 in. (152 mm) above and below the floor with cup head weld pins (Item 2J) spaced max 10 in. (254 mm) OC along each channel. The remainder of the spandrel panel framing above and below the centered full-width board shall be filled in with additional lengths of board cut to fit tightly between mullions and with the horizontal seams between boards sections tightly butted. The boards shall be secured to the spandrel panel perimeter angles with cup head weld pins at each corner of each board and spaced max 10 in. (254 mm) OC. When faced boards are used, butted seams to be covered with min 4 in. (102 mm) wide aluminum foil tape.
ROCKWOOL MALAYSIA SDN BHD — CurtainRock 80
ROXUL INC — CurtainRock 80

I. Framing Covers - Curtain Wall Insulation* — Min 8 in. (203 mm) wide strips cut from the same min 2 in. (51 mm) thick mineral wool batt insulation used for the curtain wall insulation (Item 2H). Framing covers to be centered over mullions, and secured to the spandrel panel perimeter angles (Item 2E) with cup head weld pins (Item 2J) spaced max 12 in. (305 mm) OC. Where more than one spandrel panel occurs between vertically separated vision panels, the horizontal transom between spandrel panels shall also be covered with an 8 in. (203 mm) wide framing cover in the same manner as on the vertical mullions. Framing covers on mullions to abut the mineral wool batt safing material (Item 3A) above and below floor.
ROCKWOOL MALAYSIA SDN BHD — CurtainRock 80
ROXUL INC — CurtainRock 80

J. Weld Pin — No. 12 gauge galv steel weld pin with nom 1-3/16 in. (30 mm) diam galv steel cup head. Cup head weld pins provided in two lengths. One length to be equal to thickness of curtain wall insulation (Item 2H) and second length to be equal to thickness of curtain wall insulation plus thickness of framing cover (Item 2I). Cup head weld pins inserted through curtain wall insulation and mullion covers and welded to spandrel panel perimeter angles at max OC spacings referenced in Items 2H and 2I.

3. Safing System — Max separation between edge of floor assembly and face of framing member at time of installation is 8 in. (203 mm). The safing system is designed to accommodate vertical shear up to 5% of its installed width. The safing system shall incorporate the following construction features:

A. Forming Material* — Nom 4 in. (102 mm) thick, mineral wool batt safing material to be installed in continuous pieces between mullion clips. Safing material to be cut to a min 4-1/2 in. (114 mm) width and stacked to a thickness which is at least 25 percent greater than the width of the linear gap between the curtain wall and the edge of the concrete floor slab. The safing material is compressed and inserted cut-edge-first into the linear gap such that its top surface is flush with the top-surface of the floor assembly and such that it is friction-fit between mullion mounting angles. Additional pieces of safing material to be friction-fit into space between mullion mounting clips at each mullion location with top edges of mullion clips covered with a min 1/2 in. (13 mm) thickness of compressed safing material.
ROCKWOOL MALAYSIA SDN BHD — SAFE
ROXUL INC — SAFE

B. Fill, Void or Cavity Material* — Min 1/16 in. (1.6 mm) dry (1/8 in. or 3.2 mm wet) thickness of fill material applied over top of forming material and lapping min 1 in. onto top surface of concrete floor and onto the curtain wall insulation and framing covers. When CFS-SP SIL is used, min wet (and dry) thickness of spray is 2 mm.
HILTI CONSTRUCTION CHEMICALS, DIV OF HILTI INC — CP 672 FC Firestop Joint Spray, CFS-SP SIL Firestop Silicone Joint Spray or CFS-SP WB Firestop Joint Spray

*Bearing the UL Classification Mark

Classified by
Underwriters Laboratories, Inc.
to ASTM E2307

System No. CW-D-2046

F Rating — 2 Hr
T Rating — 1/4 Hr
Integrity Rating — 2 Hr
Insulation Rating — 1/4 Hr
Linear Opening Width — 4 In. Max
Class II Movement Capabilities - 5% Vertical Shear (See Item 3)

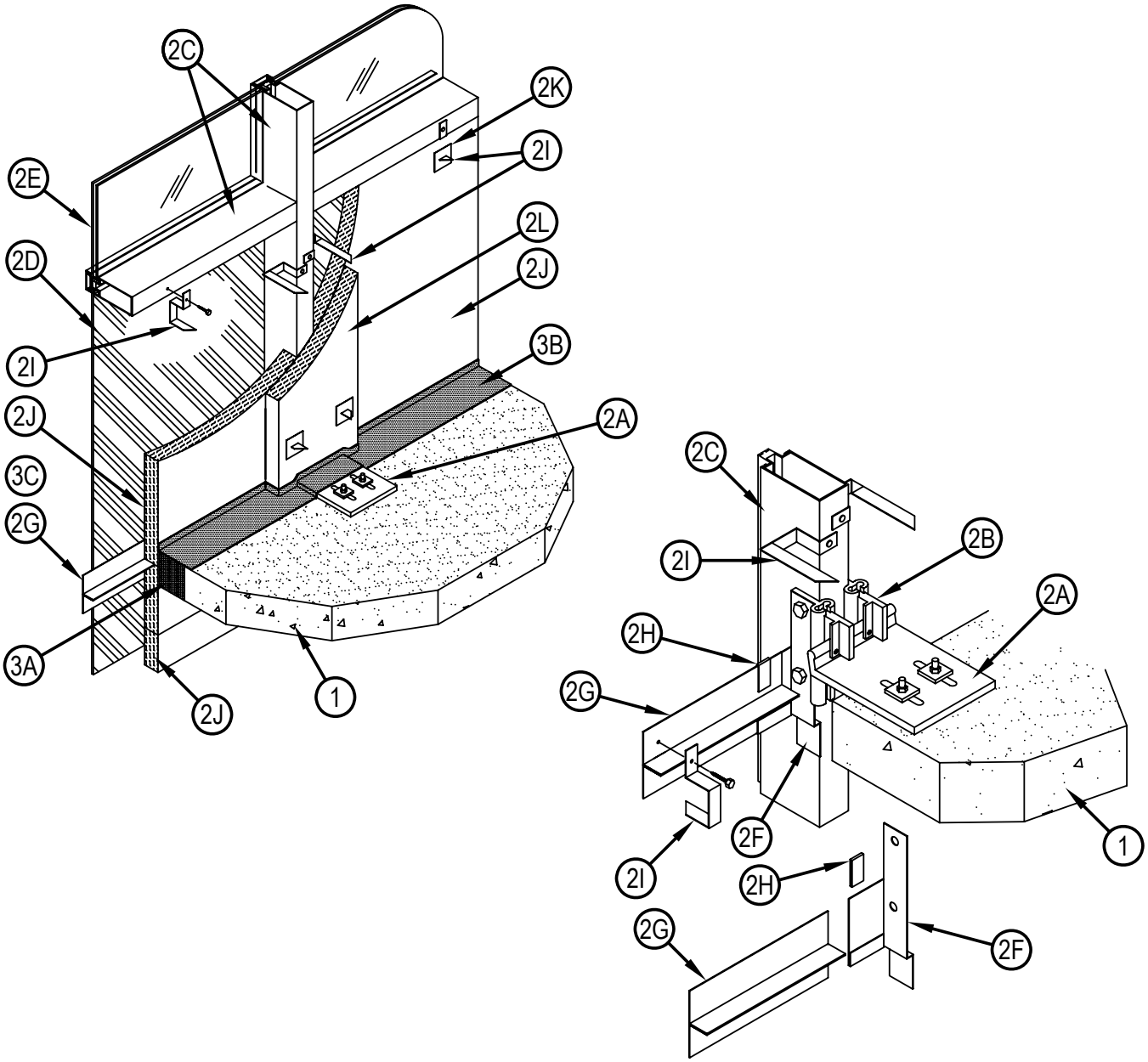

Hilti Firestop Systems

Reproduced by HILTI, Inc. Courtesy of
Underwriters Laboratories, Inc.
June 04, 2010

Classified by
Underwriters Laboratories, Inc.
to ASTM E2307

System No. CW-D-2046

F Rating — 2 Hr
T Rating — 1/4 Hr
Integrity Rating — 2 Hr
Insulation Rating — 1/4 Hr
Linear Opening Width — 4 In. Max
Class II Movement Capabilities - 5% Vertical Shear (See Item 3)

1. Floor Assembly — Min 4-1/2 in. (114 mm) thick reinforced lightweight or normal weight (100-150 pcf or 1600-2400 kg/m3) structural concrete.
2. Curtain Wall Assembly — The curtain wall assembly shall incorporate the following construction features:
   A. Mullion Anchor Plates — Nom 7 in. (178 mm) wide by 9-1/4 in. (235 mm) long by 5/8 in. (16 mm) thick extruded aluminum plates with a nominal 1-3/4 in. (44 mm) high raised lip along one end to engage hooked ends of mullion mounting clips (Item 2B). Plates anchored to top surface of floor at each mullion location with steel wedge anchor bolts in conjunction with extruded aluminum washers.
   B. Mullion Mounting Clips — Nominal 3 in. (76 mm) wide by 7 in. (178 mm) high extruded aluminum anchor slides with tapped holes and with separate extruded aluminum hooks designed to engage the raised lip of the anchor plate (Item 2A). Anchor slides bolted to each side of mullion at each floor with 1/2 in. (13 mm) diam stainless steel screws with locking washers. Anchor hooks secured to anchor slides with steel jacking screws and secured to raised lip of anchor plate with steel set screw.
   C. Framing — The one-piece or split rectangular tubing mullions (vertical members) and transoms (horizontal members) shall be min 2-1/2 in. wide by 6 in. deep and shall be formed from min 0.125 in. (3.2 mm) thick aluminum. Mullions spaced max 60 in. (1524 mm) OC and secured to mullion anchor plates (Item 2A) with mounting clips (Item 2B) at each floor level. Interior face of mullions to be max 4 in. (102 mm) from edge of floor assembly. Transoms to be spaced min 69 in. (1753 mm) OC. The minimum height from the top of the floor to the bottom of the vision panel sill is 33 in. (838 mm).
   D. Spandrel Panels — The spandrel panels shall consist of one of the following types:
      a. Glass Panels — Nom 1/4 in. (6 mm) thick opaque heat-strengthened glass. Each panel secured in position with aluminum pressure plates in conjunction with glazing gaskets and steel screws.
      b. Aluminum Panels — Nom 1/8 in. (3 mm) thick aluminum panels with 1/4 in. (6 mm) thick edges. Each panel secured in position with aluminum pressure plates in conjunction with gaskets and steel screws.
      c. Stone Panels — Nom 1-3/16 in. (46 mm) thick polished granite spandrel panels with 1 in. (25 mm) thick gauged edges. Each panel secured in position with aluminum pressure plates in conjunction with gaskets and steel screws.
   E. Vision Panels — Nom 1 in. (25 mm) thick insulated glass units with two layers of nom 1/4 in. (6 mm) thick transparent heat-strengthened glass separated by a 1/2 in. (13 mm) air space. Each panel installed on silicone rubber setting blocks and secured in position with aluminum pressure plates in conjunction with glazing gaskets and steel screws.
   F. Light Gauge Framing* - T-Bar Support Brackets — Nom 2 in. (51 mm) wide brackets formed from galv steel and designed to bridge extruded aluminum anchor slides of mullion mounting clips (Item 2B). Each T Bar support bracket provided with nominal 3 in. (76 mm) wide by 3 in. (76 mm) high leg with a nominal 3/4 in. (19 mm) hemmed edge to receive the bottom edge of the T-Bar (Item 2G). T Bar support bracket secured to each side of mullion using the same bolts used to attach the anchor slides of the mullion mounting clips. The hemmed edge of the T Bar support bracket is to be located 3-1/2 in. (89 mm) below the top surface of the floor slab such that, when installed, the stem of the T Bar (Item 2G) will be located 2 in. below the top plane of the floor slab. Angle of T Bar support bracket to be recessed from interior face of framing as necessary to accommodate the thickness of the curtain wall insulation (Item 2J).
   THERMAFIBER INC
   G. Light Gauge Framing* - T-Bar — Nom 3 in. (76 mm) wide by 1-1/2 in. (38 mm) high tee section formed from galv steel. T Bar installed between mullions at each floor level to restrain curtain wall insulation (Item 2J) against outward movement when forming material (Item 3A) is installed. The T Bar shall be installed with a clearance of 1/2 to 3/4 in. (13 to 19 mm) at each end. The bottom edge of the T Bar shall rest in and be supported by the hemmed edge of the T Bar support bracket (Item 2F) at each end. The top edge of the T Bar shall be locked in place with a locking clip (Item 2H) at one end and by a min No. 10 by 1/2 in. (13 mm) long self-drilling, self-tapping steel screw at the opposite end. Each T Bar shall be located with its stem at an elevation 2 in. (51 mm) below the top plane of the floor.
   THERMAFIBER INC
   H. Light Gauge Framing* - T-Bar Locking Clip — Nom 1 by 1-1/4 in. (25 to 32 mm) clips formed from galv steel and designed to lock top of T Bar (Item 2G) to T Bar support brackets (Item 2F).
   THERMAFIBER INC
   I. Light Gauge Framing* - Vertical and Horizontal Hangers — Vertical and horizontal hangers formed from 1 in. (25 mm) wide galv steel strips, supplied in two configurations with length as needed to accommodate thickness of curtain wall insulation (Item 2J) and mullion cover (Item 2L). Vertical hangers (with 90 deg twist) screw-attached to interior face of mullions with No. 10 by min 1/2 in. (13 mm) long self-drilling,

Reproduced by HILTI, Inc. Courtesy of
Underwriters Laboratories, Inc.
June 04, 2010

Classified by
Underwriters Laboratories, Inc.
to ASTM E2307

System No. CW-D-2046

F Rating — 2 Hr
T Rating — 1/4 Hr
Integrity Rating — 2 Hr
Insulation Rating — 1/4 Hr
Linear Opening Width — 4 In. Max
Class II Movement Capabilities - 5% Vertical Shear (See Item 3)

self-tapping steel screws. Vertical hangers on mullions to be located near each corner of each piece of curtain wall insulation except for the nominal 7 to 9 in. (178 to 229 mm) high piece of curtain wall insulation located immediately beneath the stem of the T Bar. The 7 to 9 in. (178 to 229 mm) high piece of curtain wall insulation immediately beneath the stem of the T Bar requires only one vertical hanger near its\' midheight at each end. Horizontal hangers (without twist) screw-attached to T Bar (Item 2G) and to transom at top of spandrel panel (sill of vision panel) with No. 10 by min 1/2 in. (13 mm) long self-drilling, self-tapping steel screws. Horizontal hangers on T Bar to be located within 6 in. (152 mm) of mullion at each end and spaced max 16 in. (406 mm) OC. Horizontal hanger on transom at top of spandrel panel to be located at center of transom. No hangers are to be used on the transom at the bottom of spandrel panel (lintel of vision panel).
THERMAFIBER INC

J. Curtain Wall Insulation* — Min 2 in. (51 mm) thick mineral wool batt insulation faced on one side with aluminum foil/scrim vapor retarder, supplied in min 36 in. (914 mm) wide batts. Insulation batts to be installed with no vertical seams. A horizontal seam is to be located 7 to 9 in. (178 to 229 mm) below the stem of the T Bar in each spandrel area and is to be sealed with aluminum foil tape. In the spandrel area beneath the stem of the T Bar, insulation panels tightly-fitted between vertical mullions and between the stem of the T Bar (Item 2G) and the transom, flush with the interior surface of framing. Insulation panels impaled on vertical and horizontal hangers (Item 2I) and secured in place with nom 2 by 2 in. (51 by 51 mm) steel locking washers (Item 2K).
THERMAFIBER INC — Firespan 90

K. Light Gauge Framing* - Locking Washers — Nom 2 by 2 in. (51 by 51 mm) clips formed from galv steel and designed to secure curtain wall insulation and mullion covers on vertical and horizontal hangers (Item 2I).
THERMAFIBER INC

L. Mullion Covers - Curtain Wall Insulation* — Nom 2 in. (51 mm) thick mineral wool batt insulation faced on one side with aluminum foil/scrim vapor retarder, supplied in min 24 by 48 in. (610 by 1219 mm) boards. Nom 12 in. (305 mm) wide strips to be centered over mullions and impaled on the same vertical hangers used to secure the spandrel panel insulation and secured in place with nom 2 by 2 in. (51 by 51 mm) locking washers (Item 2K). Mullion covers to abut the forming material (Item 3A) above and below the floor.
THERMAFIBER INC — Firespan 90

M. Light Gauge Framing* - Spiral Anchor — (Not Shown) - As an alternate to the vertical hangers (Item 2I), galv steel wire spiral anchors may be used to secure the framing covers (Item 2L) to the curtain wall insulation (Item 2J) on each side of the mullion. Nom length of spiral anchors to be equal to thickness of curtain wall insulation plus thickness of framing cover. Spiral anchors driven through mullion covers and into curtain wall insulation and spaced max 12 in. (305 mm) OC.
THERMAFIBER INC

3. Safing System — Max separation between the edge of the floor and the face of the framing members (at time of installation) is 4 in. (102 mm). The safing system is designed to accommodate vertical shear movement up to a max of 5 percent of its installed width. The safing system shall incorporate the following construction features:

A. Forming Material* — Nom 4 pcf (64 kg/m3) density mineral wool batt insulation. Batt sections cut to a min 4-1/2 in. (114 mm) width and stacked to a thickness which is min 25 percent greater than the width of linear gap between the curtain wall insulation and the edge of the concrete floor slab to attain a min 20 percent compression in the thickness direction. The forming material is compressed and inserted cut-edge-first into the linear gap such that its top surface is flush with the top surface of the floor assembly. Forming material to extend completely beneath mullion mounting plate (Item 2A). A max of two tightly-butted seams are permitted in the forming material between mullions.
THERMAFIBER INC — Type SAF

B. Fill, Void or Cavity Material* — Min 1/8 in. (3.2 mm) wet thickness (min 1/16 in. or 1.6 mm dry thickness) of fill material spray-applied over top of forming material and lapping min 1/2 in. (13 mm) onto the top surface of the floor and onto the curtain wall insulation, mullion anchor plate (Item 2A) and framing covers.
HILTI CONSTRUCTION CHEMICALS, DIV OF HILTI INC — CP 672 Firestop Joint Spray, CP 672 FC Firestop Joint Spray or CFS-SP WB Firestop Joint Spray

*Bearing the UL Classification Mark

Reproduced by HILTI, Inc. Courtesy of
Underwriters Laboratories, Inc.
June 04, 2010

Customer Hotline: Hong Kong 8228 8118, Macau 00800 8228 8118 Email: hksales@hilti.com

Design No. HI/BP 120-05

PERIMETER FIRE BARRIER SYSTEM

Hilti, Inc.

ASTM E 2307

Table 1

	FIRESTOP JOINT SPRAY CFS-SP WB	SILICONE JOINT SPRAY CFS-SP SIL
F-RATING	2-HR.	2-HR.
T-RATING	1-HR.	1-HR.
APPLICATION THICKNESS	1/8" WET FILM (1/16" DRY)	2mm (0.079") WET FILM

Rated for ± 0 % horizontal movement

Rated for - 100% downward vertical shear movement (3/4 in.) Class II 500 Cycles

Rated for + 0% upward vertical shear movement

UL 2079

L-Rating <1.0 SCFM/LF

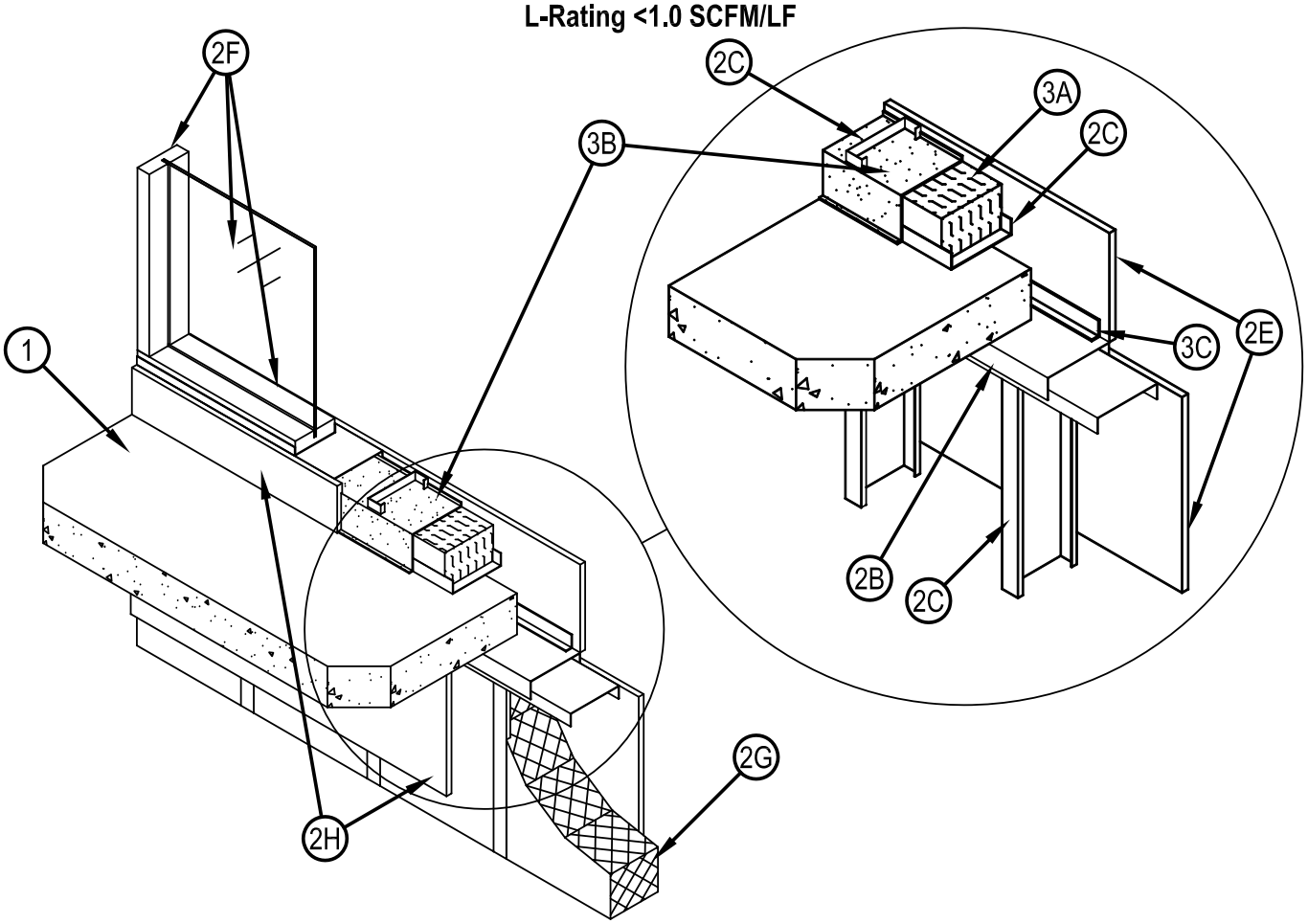

Design No. HI/BP 120-05

1. CONCRETE FLOOR ASSEMBLY: Min. two-hour rated concrete floor assembly (Item 1) made from either lightweight or normal weight concrete with a density of 100-150 pcf, with a min. thickness of 4 to 4-1/2 in., respectively, at the slab edge (joint face). Optional – Provided the two-hour concrete floor assembly (Item 1) rating is not compromised, the overall slab thickness may vary to accommodate various blockout depths (longitudinal recesses) formed in the concrete, to house an optional architectural joint system. The blockout width may also vary without restriction.
2. CURTAIN WALL ASSEMBLY: The curtain wall assembly shall incorporate the following construction features:
   A. Mounting Attachment: (Not shown) Attach the steel-stud framing to the structural framing according to the curtain wall manufacturer's instructions. When required, connect the mounting attachments to the concrete floor assembly (Item 1) at the slab edge (joint face), according to the curtain wall manufacturer's instructions. Use a max. 10 ft. distance between mounting attachments.
   B. Slip-Track (Deflection Channel): As part of the Curtain Wall Assembly (Item 2) attach a min. 16 GA channel, sized to accommodate Steel-Stud Framing (Item 2C), to the bottom of the Concrete Floor Assembly (Item 1) using 1/4 in. diameter x 2 in. long concrete screws spaced nominally 12 in. on center. Cantilever the Slip-Track (Deflection Channel) (Item 2B) nominally 1 in. to 2 in. past the vertical face of the Concrete Floor Assembly (Item 1). The Slip-Track (Items 2B) and floor track of the Steel-Stud Framing (Item 2C) create a min. 4 in. deep by 1 in. to 2 in. wide reveal. Attach Reinforcing Angle (item 3C) to top of Slip-Track (Deflection Channel) (Item 2B). Create an exterior max. 3/4 in. horizontal joint at the Slip-Track (Deflection Channel) (Item 2B) after the Sandwiched Wall Surface (Item 2E) is installed. Form the joint using two juxtaposed edges of the Sandwiched Wall Surface (Item 2E) as the sides and create the back of the joint using the exposed steel face of Slip-Track (Deflection Channel) (Item 2C). Locate the 3/4 in. horizontal joint directly below and parallel to the Perimeter Joint Protection (Item 3).
   C. Steel-Stud Framing: Use min. 6 in. by 1-5/8 in., 16 GA steel "C" studs cut to length as vertical framing members spaced a max. of 16 in. on center, secure the ends of the steel studs in compatible sized 20 GA steel tracks, using min. #6 x -1/2 in. pan or hex head screws. Cantilever the floor track nominally 1 in. to 2 in. past the vertical face of the Concrete Floor Assembly (Item 1). Secure the floor track to the top of the Concrete Floor Assembly (Item 1) with 1/4 in. diameter x 2 in. long concrete screws (or either powder actuated fasteners or steel expansion bolts having equivalent strength and performance) spaced a max. of 24 in. on center. Insert the ceiling track inside the “Slip-Track (Deflection Channel)” (Item 2B) to create a 3/4 in. gap between channels to allow for downward movement.
   D. Optional Joint System (Not Shown): Use only sealants certified by Intertek, bearing an Intertek label or an equivalent Listed and Labeled sealant meeting the following requirements: Install a nominal 1/2 in. polyethylene backer rod into the 3/4 in. horizontal joint in contact with the steel face of Slip-Track (Deflection Channel) (Item 2B). Cover the nominal 1/2 in. polyethylene backer rod using a silicone, endothermic, or intumescent sealant.
   E. Sandwiched Wall Surface: Install Reinforcing Angle (Item 3C), then apply and secure a min. 5/8 in. thick, 48 in. wide by 96 in. long, exterior grade fiberglass sheathed gypsum board to Steel-Stud Framing (Item 2C) with min. 1-1/4 in. long Type S drywall screws 12 in. on center in field and 8 in. on center at perimeter created by the Slip-Track (Deflection Track) (Items 2B) and the floor track of the Steel-Stud Framing (Item 2C). Do not attach exterior grade fiberglass sheathed gypsum board to Slip-Track (Deflection Channel) (Item 2B). Alternate Cementitious Backer Units: Use min. 5/8 in. thick cement based boards attached to Steel-Stud Framing (Item 2C) with min. 1-1/4 in. long Type S drywall screws 12 in. on center in field and 8 in. on center at perimeter created by the Slip-Track (Deflection Track) (Items 2B) and the floor track of the Steel-Stud Framing (Item 2C). Do not attach 5/8 in. thick cement based boards to Slip-Track (Deflection Track) (Item 2C). Butt all edges of all 5/8 in. thick cement based boards tightly together and cover joints with glass fiber mesh tape covered with compatible cementitious coating.
   F. Optional Vision Glass Panels: Size and install glass panels into curtain wall framing according to the curtain wall system manufacturer's guidelines. Use a min. 1/4 in. thick, clear, heat-strengthened (HS) glass or tempered glass sized for the window framing, which allows the vision glass panels to be secured between the notched shoulder of the framing and pressure bar. When required by the manufacturer, secure vision glass panels with a thermal break (rubber extrusion), pressure bar (aluminum extrusion), min. 1/4-20 x 5/8 in. long screws, and a snap face (aluminum extrusion). Optional Window Framing: Framing material shall be non-combustible. Locate window framing at least 4-1/2 in. above the top surface of the floor assembly.

Reproduced by HILTI, Inc.
Courtesy of Intertek Group
June 20, 2014

Design No. HI/BP 120-05

G. Curtain Wall Insulation: Use only mineral wool or glass fiber batt insulation certified by Intertek, bearing an Intertek label or an equivalent Listed and Labeled mineral wool or glass fiber batt insulation meeting the following requirements: Any mineral wool or glass fiber batt insulation. Install curtain wall insulation within the cavity of the Steel-Stud Framing (Item 2C) a min. of 24 in. below the Slip-Track (Deflection Channel) (Item 2B). Secure the insulation in accordance with the manufacturer's installation instructions. Mineral wool or glass fiber batt insulations are acceptable.

H. Interior Curtain Wall Surface: Install Type X Gypsum board to the interior curtain wall surface above and below the Concrete Floor Assembly (Item 1) wherever Steel Stud Framing (Item 2B), Slip-Track (Deflection Channel) (Item 2C) or Curtain Wall Insulation (Item 2H) is exposed. Secure the interior curtain wall surface in accordance with the manufacturer's installation instructions.

I. Exterior Curtain Wall Finish: (Not shown) The exterior finish shall not create voids or openings in the sandwiched wall surface and shall extend at least 4 in. above and at least 24 in. below the surface of the Concrete Floor Assembly (Item 1). The following finishes are acceptable:

(1) Exterior Insulation Finish System: Use only EIFS composed of an expanded polystyrene (EPS) foam insulation, and an Exterior Curtain Wall Finish certified by Intertek, bearing an Intertek label or an equivalent Listed and Labeled EIFS meeting the following requirements: A plaster, base coat and reinforcing mesh applied over the sandwiched wall surface. Precut the mesh as needed. The mesh is a woven fiberglass reinforcement fabric that is compatible with the plaster base coat and finish coat materials. Apply 1/16 to 1/8 in. thick plaster base coat to the exposed surface of the EPS foam. The EPS foam boards nominally measure 24 in. wide by 48 in. long by a max. of 4 in. thick with a nominal density of 1 pcf. The EPS foam is attached to the Sandwiched Wall Surface (Item 2E) using mechanical fasteners or an adhesive in accordance with manufacturer's recommendations. Install the EPS boards in a running bond (brick-like) pattern and staggered over Sandwiched Wall Surface (Item 2E) joints. Apply pressure to the EPS boards to assist in the bonding process. All EPS boards must be butted together with no gaps or voids between them. Allow a min. of 12 hours before continuing the application process when using adhesive. The EPS boards must be rasped to remove all irregular seams and establish a continuous flat surface. Apply the mesh over the EPS; embed the mesh into the plaster base coat using a trowel. Start at the middle and work outwards towards edges. The final thickness of the plaster base coat with the mesh embedded should be approximately 1/16 in.. Let the base coat dry completely before applying the plaster finish coat. The plaster finish coat is a gypsum based wall coating which may contain silica sand or marble aggregates. Apply the plaster finish coat using a trowel in the same manner as the plaster base coat. Other installation techniques are acceptable when detailed by the manufacturer. The EIFS system is a monolithic assembly without expansion or control joints.

(2) Glass Panels: Size and install glass panels into curtain wall framing according to the curtain wall system manufacturer's guidelines. Use a min. 1/4 in. thick, clear, heat-strengthened (HS) glass or tempered glass with a max. width and height less than the framing on center spacing, which allows the glass to be secured between the notched shoulder of the framing and pressure bar. Panels are secured with a thermal break (rubber extrusion), pressure bar (extrusion), min. 1/4-20 x 5/8 in. long screws, and a snap face (extrusion) or other manner as detailed by the manufacturer. The system is a monolithic assembly without expansion or control joints.

(3) Aluminum Panels: Min. 1/8 in. thick aluminum panels secured to the steel-stud framing (Item 2B) in accordance with the manufacturer's installation instructions. When framing for the aluminum panels is required, it is to be installed with the manufacturer's installation instructions. The system is a monolithic assembly without expansion or control joints.

(4) Brick: Use any conventional brick and mortar type. Any brick pattern is acceptable. Mortar joints are not to exceed 7/8 in. Secure bricks to wall assembly using conventional acceptable masonry construction techniques. The system is a monolithic assembly without expansion or control joints.

(5) Stucco: Use only stucco systems certified by Intertek, bearing an Intertek label or an equivalent Listed and Labeled stucco system meeting the following requirements: Any stucco system is acceptable provided that the following is abided by: When EPS is used, the EPS foam boards nominally measure a max. of 4 in. thick with a nominal density of 1 pcf. The stucco manufacturer confirms the stucco is compatible with the sandwiched wall surface. The system is a monolithic assembly without expansion or control joints.

(6) Stone: Use any conventional stone panel and mortar type measuring at least 1 in. thick. Any stone pattern is acceptable. Mortar joints are not to exceed 7/8 in.. Secure stones to wall assembly using conventional acceptable masonry construction techniques. The system is a monolithic assembly without expansion or control joints.

Reproduced by HILTI, Inc.
Courtesy of Intertek Group
June 20, 2014

Design No. HI/BP 120-05

(7) Siding: Use only siding certified by Intertek, bearing an Intertek label or an equivalent Listed and Labeled siding meeting the following requirements: Any siding system is acceptable provided that the following is abided by: The siding shall be classified as non-combustible. The system is a monolithic assembly without expansion or control joints.

(8) GFRC Panels: Glass fiber reinforced concrete panels shall be at least 1 in. thick and attached in accordance with the manufacturer's installation instructions. The system is a monolithic assembly without expansion or control joints.

(9) Use only roofing materials certified by Intertek, bearing an Intertek label or an equivalent Listed and Labeled roofing material meeting the following requirements: Class A bituminous roofing material applied in accordance with manufacturer's installation instructions.

3. PERIMETER JOINT PROTECTION: The perimeter joint (linear opening) shall not exceed a 2 in. nominal joint width (joint width at installation) between the interior face of the sandwiched wall surface and the vertical face of the concrete floor assembly. The perimeter joint treatment shall incorporate the following construction features:

A. Packing Material: Use only Mineral Wool certified by Intertek, bearing an Intertek label meeting the following requirements: A min. 4 in. thick, 4 pcf density, mineral wool batt insulation. Install min. 6-1/4 in. wide strips of the Packing Material into the web of the floor track and web of the steel studs of the Steel-Stud Framing (Item 2C).

B. CERTIFIED MANUFACTURER: Hilti, Inc.
CERTIFIED PRODUCT: Joint Spray or Sealant
MODEL: Firestop Joint Spray CFS-SP WB or Silicone Joint Spray CFS-SP SIL
Fill, Void or Cavity Material: Spray or brush apply to completely cover the Packing Material (Item 3A), extending coverage at the thickness specified in Table 1 and overlap the material a min. 1/2 in. onto the adjacent concrete floor slab assembly and Steel-Stud Framing (Item 2C) and Sandwiched Wall Surface (Item 2E). When application is stopped and the applied liquid cures to an elastomeric film before application process is restarted, overlap the edge of the cured material at least 1/8 in. with fresh material.

C. Reinforcing Angle: Mount a min. 20 GA, 1-1/2 in. x 3/4 in. galvanized steel angle continuously to the top of the Slip-Track (Deflection Channel) (Item 2B) using min. # 6 x 1/2" framing screws with pan or hex head nominally 24 in. on center. Screws heads located on bottom of slip-track Position the reinforcing angle so that the 3/4 in. horizontal leg attaches the exposed top of the cantilevered Slip-Track (Deflection Channel) (Item 2B) and the 1-1/2 in. vertical leg is plumb with outside cantilevered edge of the floor track of the Steel-Stud Framing (Item 2C).

Reproduced by HILTI, Inc.
Courtesy of Intertek Group
June 20, 2014

Design No. HI/BP 150-01
PERIMETER FIRE BARRIER SYSTEM
Hilti, Inc.
ASTM E 2307
Table 1

	FIRESTOP JOINT SPRAY CFS-SP WB	SILICONE JOINT SPRAY CFS-SP SIL
F-RATING	150 MINUTES	150 MINUTES
T-RATING	1-HR.	1-HR.
APPLICATION THICKNESS	1/8" WET FILM (1/16" DRY)	2mm (0.079") WET FILM
CYCLING (%) HORIZONTAL VERTICAL	± 12.5 ± 5	± 7.5 ± 5

ASTM E 2307/ASTM E 1399 Cycling
Class IV: 500 cycles @ 30 cpm
UL 2079L-Rating <1.0 SCFM/LF

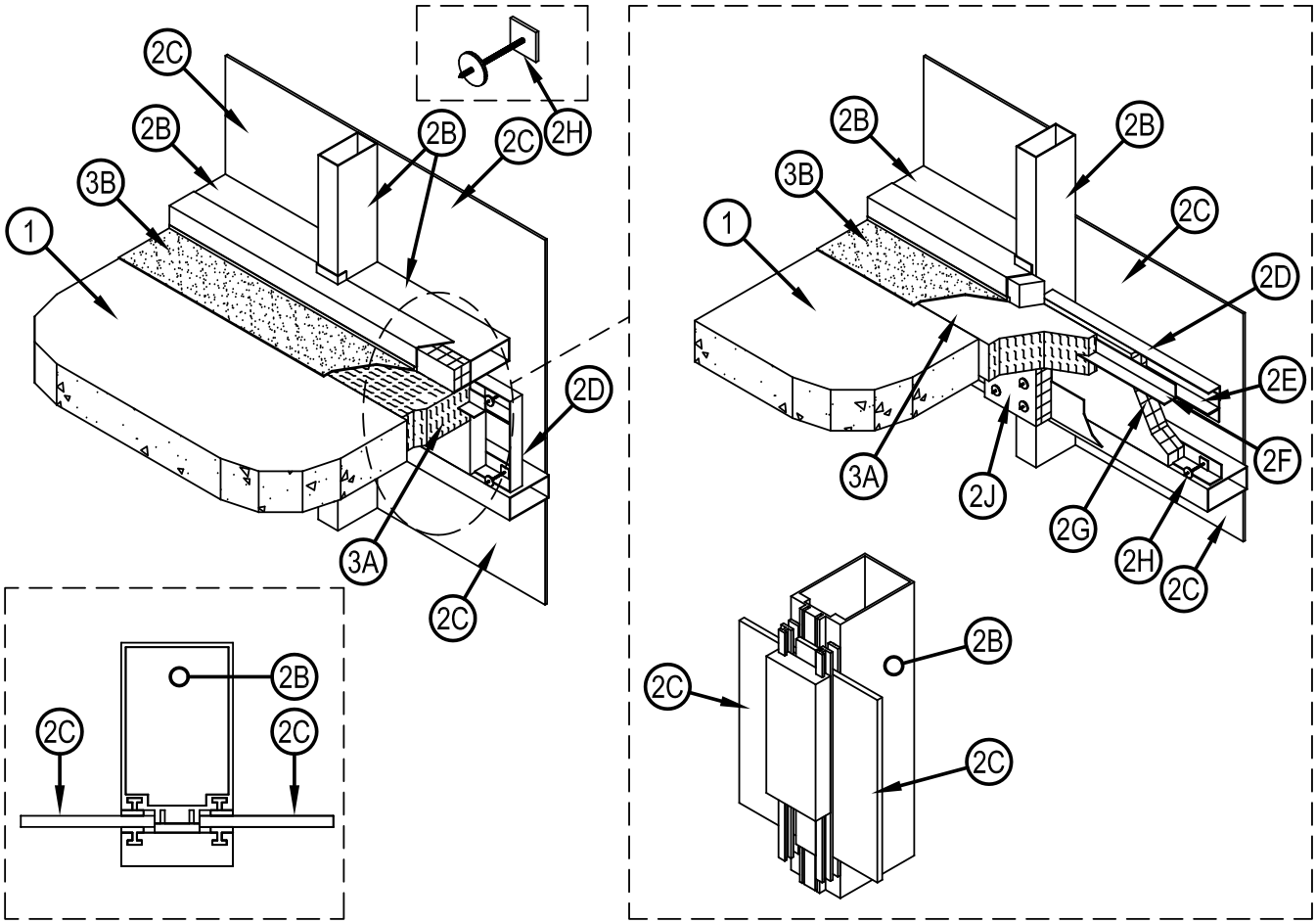

Hilti Firestop Systems

Reproduced by HILTI, Inc.
Courtesy of Intertek Group
June 20, 2014

Intertek

Design No. HI/BP 150-01

1. CONCRETE FLOOR ASSEMBLY: Two-hour rated concrete floor assembly made from either lightweight or normal weight concrete with a density of 100 to 150 pcf, having a min. thickness of 4-1/2 in. at the joint face. When a longitudinal recess (blockout) is required to contain an architectural joint system, increase concrete floor assembly thickness to maintain a min. thickness of 4-1/2 in. and accommodate depth of blockout formed in the concrete: blockout width unrestricted.
2. CURTAIN WALL ASSEMBLY: Incorporate the following construction features:
   - A. Mounting Attachment: (Not shown) Attach the aluminum framing (Item 2B) to structural steel framing according to the curtain wall manufacturer's instructions. Connect mounting attachments to the joint face of the concrete floor assembly (Item 1) in accordance with the curtain wall manufacturer's instructions.
   - B. Aluminum Framing: Use hollow rectangular aluminum extruded tubing with min. overall dimensions of 0.100 in. thick, 3-3/4 in. high (total 5-5/16 in. high with mullion and transom covers) and 2-1/2 in. wide. Locate mullions min. 60 in. on center (oc) and locate transoms a min. 10 in. oc For the spandrel region, locate the lower transom min. 5-1/2 in. below the concrete floor assembly (Item 1) as measured from the underside of the floor to the top side of the transom and locate the upper transom as a min. at the floor line as measured from the top surface of the concrete floor assembly (Item 1) to the underside of the transom.
   - C. Glass Panels: Sized and installed into aluminum framing (Item 2B) according to the curtain wall system manufacturer's guidelines. Use min. 1/4 in. thick clear, heat strengthened (HS) glass or tempered glass with a max. width and height less than the aluminum framing (Item 2B) oc spacing, which allows the glass to be secured between the notched shoulder of the aluminum framing (Item 2B) and pressure bar. Secure glass panels with a thermal break (rubber extrusion), pressure bar (aluminum extrusion), min. 1/4-20 x 5/8 in. long screws, and a snap face (aluminum extrusion).
   - D. Perimeter Spandrel Angles: Use min. 20 GA, galvanized steel angle with 1-1/2 in. x 1-1/2 in. legs and place around the entire inside perimeter of the aluminum framing (Item 2B) in spandrel area. Secure perimeter spandrel angles to the aluminum framing (Item 2B) using No. 10 sheet metal screws spaced max. 8 in. oc.
   - E. Reinforcing Angle: Place two 1-1/2 in. by 1-1/2 in., 20 GA steel angles "back to back" to form a T-shape reinforcing angle that is continuous between the mullions of the Aluminum framing (Item 2B). Locate the T-shape reinforcing angle at the horizontal centerline of the packing material (Item 3A) and secure the T-shape reinforcing angle to the perimeter spandrel angles (Item 2D) using No. 10 sheet metal screws and impaling pins (Item 2G).
   - F. Perimeter Fire Barrier Reinforcement: Use min. 20 GA, steel angle having a 1-1/2 in. high vertical leg and a 1-1/2 in. wide horizontal leg. Fully embed horizontal leg into the packing material (Item 3A) at the centerline. Secure the vertical leg at each mullion interior face (aluminum framing – Item 2B) using at least two min. 1/2 in. long, No. 10, sheet metal screws spaced nominally 1 in. oc. Install perimeter fire barrier reinforcement continuous along the length of the perimeter joint protection (Item 3). Overlap joints in the perimeter fire barrier reinforcement a min. 12 in. and secure the overlap using at least three min. 1/4 in. long, No. 10, sheet metal screws spaced nominally 4 in. oc, placed in both the vertical and horizontal legs.
   - G. Impaling Pins: Attach curtain wall insulation (Item 2G) to the perimeter spandrel angle (Item 2D) using min. 12 GA steel cup-head pins spaced max. 8 in. oc at the centerline of the vertical leg. Size impaling pins to the curtain wall insulation (Item 2G) thickness to maintain a firm attachment to the perimeter spandrel angle (Item 2D). Install impaling pins so that the interior face of the curtain wall insulation (Item 2G) is flush with the interior face of the aluminum framing (Item 2B). Install additional impaling pins on either side of the aluminum framing (Item 2B) mullion, to accommodate installation of the mullion covers (Item 2J) so that four impaling pins are use to attach each cover.
   - H. Curtain Wall Insulation: Use only Mineral Wool certified by Intertek, bearing an Intertek label, meeting the following requirements. A nominal 2 in. thick, 8 pcf, mineral wool batt insulation faced on one side with aluminum foil scrim (vapor retarder), which is exposed to the room interior and installed between and flush with interior face of aluminum framing (Item 2B). Secure the curtain wall insulation using impaling pins (Item 2H), which are attached to perimeter spandrel angles (Item 2D). Seal all meeting edges of curtain wall insulation with nominal 4 in. wide pressure sensitive aluminum foil faced tape centered over the junction so that approximately 2 in. of tape covers each edge of the adjacent curtain wall insulation. Apply pressure sensitive aluminum foil faced tape over all meeting edges of curtain wall insulation and aluminum framing (Item 2B) so that approximately 2 in. covers each edge of the adjacent material.

Reproduced by HILTI, Inc.
Courtesy of Intertek Group
June 20, 2014

Design No. HI/BP 150-01

I. Transom Cover: Use only Mineral Wool certified by Intertek, bearing an Intertek label, meeting the following requirements Make from strips of 2 in. thick 2-1/2 in. wide, 8 pcf density, mineral wool batt insulation faced on one side with aluminum foil scrim (vapor retarded), which is expose to the room interior. Install transom cover so as to continuously cover the top spandrel transom and on packing material (Item 3A). Attach to aluminum framing (Item 2B) using 3 in. long bugle head No. 6 course thread screws with a 1-1/2 in. diameter speed clip used as a washer on either side of the mullion. Allow transom cover to abut top of the packing material (Item 3A). Seal all meeting edges of transom covers with nominal 4 in. wide pressure sensitive aluminum foil faced tape over the junction so that approximately 3/4 in. of tape covers each edge of the adjacent aluminum framing (Item 2B).

J. Mullion Covers: Use only Mineral Wool certified by Intertek, bearing an Intertek label, meeting the following requirements. Make 7 in. by 7 in. squares of 2 in. thick, 8-pcf density, mineral wool batt insulation faced on one side with aluminum foil scrim (vapor retarder), which is exposed to the room interior. Center framing covers over all aluminum framing (Item 2B) mullions and secure using impaling pins (Item 2H). Do not pass framing covers through the perimeter joint protection (Item 3). Allow framing covers to abut bottom surfaces of the packing material (Item 3A) provided that no deformation occurs.

3. PERIMETER JOINT PROTECTION: Do not exceed an 8 in. nominal joint width (joint width at installation). Incorporate the following construction features for the perimeter joint protection (also known as perimeter fire barrier system):

A. Packing Material: Use only Mineral Wool certified by Intertek, bearing an Intertek label, meeting the following requirements. A min. 4 in. thick, 4-pcf density, mineral wool batt insulation installed with the fibers running parallel to the edge of concrete floor assembly (Item 1) and curtain wall assembly (Item 2). Cut packing material width to achieve 20% compression when installed in the nominal joint width. Compress the packing material into the perimeter joint. Tightly compress together splices (butt joints) in the lengths of packing material by using min. 1/4 in. compression per piece of packing material. Locate the top surface of the packing material flush with the top surface of the concrete floor assembly (Item 1).

B. CERTIFIED MANUFACTURER: Hilti Corporation
CERTIFIED PRODUCT: Joint Sealant
MODEL: Firestop Joint Spray CFS-SP WB or Silicone Joint Spray CFS-SP SIL
Fill, Void or Cavity Material: Spray apply the liquid to cover the exposed top surface of the packing material (Item 3A) compressed and installed in the perimeter joint. Apply at the thickness specified in Table 1 and overlap the spray coating a min. 1/2 in. onto the adjacent transom cover (Item 2I) and concrete floor assembly (Item 1). When the spraying process is stopped and the applied spray coating cures to an elastomeric film before installation process is restarted, then overlap the edge of the cured spray coating at least 1/8 in. with the liquid spray coating.

Reproduced by HILTI, Inc.
Courtesy of Intertek Group
June 20, 2014

HILTI

Package Volume/Estimating Tables 269

Firestop Terms and Definitions 274

Nomenclature — Fire Resistance Directory 276

UL Certificates of Compliance Sheets 277

CP 601S 277
CP 606 277
CP 617 277
CP 620 277
CP 636 278
CP643N 50/1.5 in., CP643N 63/2 in., CP643N 90/3 in. and CP643N 110/4 in., CP643N 160/6 in., CP644 200/8 in. and CP644 250/10 in. 278
CP 644 (product may be suffixed to denote size) Firestop Collar 278
CP 648-E, CP 648-S 278
CFS-BL Firestop Block 279
FS-ONE MAX 279
CFS-SP WB 279
FS-ONE MAX 279

Fire Service Department Letter Macau 280

CP 601S 280
CP 606 280
CP 617 280
CP 620 280
CP 636 281
CP 643N 281
CP 648-E and CP 648-S 281
FS 657 281
FS-ONE 282
CP 672 282
CFS-BL Firestop Block 282

Hilti Firestop
Saving Lives
through innovation
and education

Packaging coverage chart

Product name	Description	Packaging	Contents (in³)
FS-ONE	High Performance Intumescent Firestop Sealant	10.1 fl. oz tube	18.2
		5.0 gal pail	1155
		600 mL foil	36.4
Retaining Collar (for use with FS-ONE)		1 roll/box	25 ft. (300 in.)
FS 657	Fire Block	single blocks (2" X 5" X 8")	80
CP 601S	Elastomeric Firestop Sealant	10.5 fl. oz tube	18.9
		600 mL foil	36.4
		5.0 gal pail	1155
CP 604	Self-Leveling Firestop Sealant	600 mL foil	36.4
		4.0 gal pail	924
CP 606	Flexible Firestop Sealant	10.5 fl. oz tube	18.9
		580 mL foil	35.3
		5.0 gal pail	1155
CP 617	Firestop Putty Pad	1/8" x 6" x 7"	5.25
CP 617L	Firestop Putty Pad	1/8" x 7" x 7"	6.125
CP 617XL	Firestop Putty Pad	1/8" x 9" x 9"	10.125
CP 618	Firestop Putty Stick	1-1/4" x 1-1/2" x 10"	18
CP 620	Fire Foam	10.2 fl. oz tube	90-110
CP 637	Firestop Mortar	30 lb pail	900–1000
CP 675T	Firestop Board	Small Board (26" x 28")	
		Large Board (26" x 39")	
CFS-SP WB	Firestop Joint Spray	5.0 gal pail	1155
CP 672 FC	Speed Spray	4.5 gal pail	1040
Mineral Wool		1 box – 4 pcs (48" x 24" x 4")	17,664
CP 506	Smoke and Acoustic Sealant	600 mL foil	36.4
		5.0 gal pail	1155
CP 572	Smoke and Acoustic Spray	5.0 gal pail	1155

TABLE 1

Calculation chart for pipe areas

Nominal pipe size	Pipe O.D.	Area (sq. in.)
1/2"	0.84	0.55
1"	1.3	1.33
1-1/2"	1.9	2.83
2"	2.4	4.52
3"	3.5	9.62
4"	4.5	15.9
6"	6.6	34.19
8"	8.6	58.06
10"	10.8	91.56
12"	12.75	127.61

Pipe O.D. based on schedule 40 steel pipe and plastic pipe

TABLE 2

General estimation table for CP 648-E (Length of Wrap Strip required for different pipe diameters)

Nominal Pipe Size	Length of CP 648-E Wrap Strips (3/16" thick) Required* (Number of layers of Wrap Strips)			
	1	2	3	4
1-1/2"	8"	16"	26"	37"
2"	9"	20"	31"	43"
3"	12"	27"	41"	58"
4"	-	30"	50"	70"
6"	-	-	71"	97"
8"	-	-	-	122"
10"	-	-	-	142"
12"	-	-	-	167"

Estimations based upon Schedule 40 PVC Plastic Pipe.
* Estimated quantities are approximate. No allowance has been made for waste.

TABLE 3

Estimation chart: volume of firestop at 1/2" depth (in^3), per penetration

	Actual pipe diameter (in.)											
O.D.*	**0.84**	**1.05**	**1.3**	**1.9**	**2.4**	**3.5**	**4.5**	**5.6**	**6.6**	**8.6**	**10.8**	**12.8**
	Nominal pipe size											
I.D.	**1/2**	**3/4**	**1**	**1-1/2**	**2**	**3**	**4**	**5**	**6**	**8**	**10**	**12**
1	0.12											
1-1/2	0.60	0.46	0.22									
2	1.30	1.14	0.90	0.16								
2-1/2	2.18	2.02	1.78	1.04	0.20							
3	3.26	3.10	2.86	2.12	1.28							
3-1/2	4.54	4.38	4.14	3.40	2.54							
4	6.00	5.84	5.62	4.86	4.02	1.48						
5	9.54	9.38	9.14	8.40	7.56	5.00	1.86					
6	13.86	13.70	13.46	12.72	11.86	9.32	6.18	1.82				
7	18.96	18.80	18.56	17.82	16.98	14.42	11.28	6.92	2.14			
8	24.84	24.68	24.46	23.70	22.86	20.32	17.18	12.82	8.02			
9	31.52	31.36	31.12	30.38	29.54	26.98	23.84	19.48	14.70	2.76		
10	38.98	38.82	38.58	37.84	36.98	34.44	31.30	26.94	22.16	10.22		
12	56.24	56.08	55.86	55.10	54.26	51.72	48.58	44.22	39.42	27.50	10.74	
14	76.66	76.50	76.26	75.52	74.66	72.12	68.98	64.62	59.84	47.90	31.14	13.12
16	100.20	100.10	99.82	99.06	98.22	95.68	92.54	88.18	83.38	71.46	54.70	36.68

Coverages are based on the outside diameter of schedule 40 steel pipe. * For insulated pipes, use the outside diameter of the insulation.
- For 1/4" depth, divide above number by 2.
- For 1" depth, multiply above number by 2.
- For 5/8" depth, multiply above number by 1.25.
- For 1-1/4" depth, multiply above number by 2.5.
- For 3/4" depth, multiply above number by 1.50.

Note: Walls require firestop on both sides; multiply above number again by 2.
Estimate only. Assumes no waste.

TABLE 4

Estimation chart: volume of firestop used in retaining collar around vented plastic pipe*

Pipe I.D. (in.)	Pipe O.D. (in.)	Collar I.D. (in.)	FS ONE volume required (cu. in.)	Approximate # of 10.1 Oz.Tubes required to fill one collar	Collar length required** (in.)
4	4.5	6.5	30.22	1.66	21.42
3	3.5	5.5	24.73	1.35	18.28
2	2.4	4.4	18.68	1.03	14.82
1.5	1.9	3.9	15.94	0.88	13.25
1	1.4	3.4	13.19	0.72	11.68

* Applies to Hilti listed systems using retaining colllars — refer to system(s) for details.
** Collar length assumes the ends overlap 1". Volume of FS-ONE calculated with retaining collar item no. 00283225s

Hilti Firestop
Saving Lives
through innovation
and education

How to estimate amount of Firestop needed for pipe penetrations

Single pipe, circular opening

Use the Estimation Chart (Table 3) found on page 481 Find the pipe size across the top of the table and match it with the hole diameter found along the side of the chart. The value from the table represents the volume of annular space to be filled per penetration.

Single pipe, rectangular opening

1. Calculate the area of the pipe. For schedule 40 steel pipe, use the Calculation Chart For Pipe Areas (Table 1) found on page 481. Find the pipe size that is used and note the Area located in the far right column OR calculate the total cross-sectional area of the penetration using the following formula (note: all values should be in units of inches):

   $A_P = (r_P^2) \times 3.14$

   A_P = total area of penetrating pipe

   r_P = outside radius of penetrating pipe = $\frac{\text{diameter}}{2}$

2. Calculate the area of the opening (all values in units of inches):

   A_o = length x width

   A_o = area of opening

3. Subtract the area of the penetrating pipe from the area of the opening and multiply by the depth of the firestop required:

   Total firestop required = $(A_o - A_P) \times F_D$

   F_D = firestop depth

   Total annular space to be filled per penetration. For wall systems requiring firestopping on both sides, multiply by 2.

For multiple pipes in an opening

Use the methods stated previously, but add all of the penetration areas (A_p) together before subtracting from the total area of the opening (A_o).

Sample Problem

APPLICATION: 3-hour fire rated concrete floor. Opening size is 8" dia. with nominal 6" dia. steel pipe. Use UL System C-AJ-1226 (1/4" depth FS-ONE)

A_o = 8" diameter 50.24 in^2

A_P = 6" diameter - 34.19 in^2

16.05 in^2 x 1/4" = 4.0 in^3 of FS-ONE

Hilti Firestop
Saving Lives
through innovation
and education

TABLE 1

Top of wall joint estimation table for CP 601S, CP 606 and CP 506 (Fluted deck only — deck ribs perpendicular to wall)

	Size of Metal Flute		
Joint Width	**1-1/2"**	**2"**	**3"**
1/2"	1.2 lineal feet/10.5 oz. tube	1.0 lineal feet/10.5 oz. tube	0.7 lineal feet/10.5 oz. tube
	2.4 lineal feet/600 ml foil pack	2.0 lineal feet/600 ml foil pack	1.5 lineal feet/600 ml foil pack
	15.4 lineal feet/gallon	12.8 lineal feet/gallon	9.6 lineal feet/gallon

Estimations based upon 1/2" product depth on both sides of the wall. For 1/4" depth, multiply values by 2.

TABLE 2

Top of wall joint estimation table for CP 601S, CP 606 and CP 506 (Fluted deck only, gypsum cut to fit deck profile — deck ribs perpendicular to wall)

	Size of Metal Flute		
Joint Width	**1-1/2"**	**2"**	**3"**
1/2"	0.9 lineal feet/10.5 oz. tube	1.03 lineal feet/10.5 oz. tube	0.95 lineal feet/10.5 oz. tube
	1.8 lineal feet/600 ml foil pack	2.0 lineal feet/600 ml foil pack	1.83 lineal feet/600 ml foil pack
	15.4 lineal feet/gallon	12 lineal feet/gallon	1 lineal feet/gallon

Estimations based upon 1-1/4" product depth on both sides of the wall. For 5/8" depth, multiply values by 2.

TABLE 3

General joint estimation table for CP 601S, CP 604, CP 606 and CP 506 (floor to floor, floor to wall, wall to wall, top of wall)

	Lineal Feet/10.5 oz. Tube				Lineal Feet/600 ml Foil Pack				Lineal Feet/Gallon			
	Sealant Depth (in.)				Sealant Depth (in.)				Sealant Depth (in.)			
Joint Width	**1/4**	**1/2**	**5/8**	**1-1/4**	**1/4**	**1/2**	**5/8**	**1-1/4**	**1/4**	**1/2**	**5/8**	**1-1/4**
1/4"	25.2	12.6	10.08	5.04	48.0	24.0	19.2	9.6	308	154	123	61
1/2"	12.6	6.3	5.04	2.52	12.0	12.0	9.6	4.8	154	77	61	30
3/4"	8.4	4.2	3.36	1.68	16.0	8.0	6.4	3.2	102	51	41	20
1"	6.3	3.15	2.52	1.26	12.0	6.0	4.8	2.4	76	38	30	15
1-1/4"	5.04	2.52	*	*	9.6	4.8	*	*	60	30	*	*
1-1/2"	4.2	2.1	*	*	8.0	4.0	*	*	50	25	*	*
2"	3.14	1.57	*	*	6.0	3.0	*	*	38	19	*	*
2-1/2"	2.52	1.26	*	*	4.8	2.4	*	*	30	15	*	*
3"	2.1	1.05	*	*	4.0	2.0	*	*	24	12	*	*
3-1/2"	1.8	0.9	*	*	3.5	1.7	*	*	22		*	*
6"	1.0	0.52	*	*	2.0	1.0	*	*	2	6	*	*
7"	0.9	0.45	*	*	1.7	0.87	*	*		5.5	*	*
8"	0.78	0.39	*	*	1.5	0.76	*	*	9.6	4.8	*	*

For wall to wall and top of wall joints, one side of the wall only, divide values by 2 to estimate for both sides of wall.

TABLE 4

Top of wall joint estimation table for CFS-SP WB Firestop Joint Spray and CP 572 (Top of wall with fluted deck)

	Size of Metal Flute		
Joint Width	**1-1/2"**	**2"**	**3"**
1/4"	38.5 lineal feet/gallon	34.2 lineal feet/gallon	28.0 lineal feet/gallon
1/2"	34.2 lineal feet/gallon	30.8 lineal feet/gallon	25.6 lineal feet/gallon
3/4"	30.8 lineal feet/gallon	28.0 lineal feet/gallon	23.6 lineal feet/gallon
1"	28.0 lineal feet/gallon	25.6 lineal feet/gallon	22.0 lineal feet/gallon
1-1/2"	23.6 lineal feet/gallon	22.0 lineal feet/gallon	19.2 lineal feet/gallon
2"	20.5 lineal feet/gallon	19.3 lineal feet/gallon	17.1 lineal feet/gallon
2-1/2"	18.1lineal feet/gallon	17.1 lineal feet/gallon	15.4 lineal feet/gallon
3"	16.2 lineal feet/gallon	15.4 lineal feet/gallon	14.0 lineal feet/gallon
3-1/2"	14.6 lineal feet/gallon	14.0 lineal feet/gallon	12.8 lineal feet/gallon

Estimations based upon 1/8" product depth with 1/2" overlap and installation on both sides of the wall. For 1/4" depth, divide values by 2.
(Note: Quantities may change when used in conjunction with fireproofing material. Refer to specific firestop system for details.)

Hilti Firestop
Saving Lives
through innovation
and education

TABLE 5

General joint estimation table for CFS-SP WB Firestop Joint Spray, CP 672 FC and CP 572 (floor to floor, floor to wall, wall to wall, top of wall, curtain wall)

Joint Width	Joint Width plus overlap	Lineal Feet/ Gallon
1/2"	1-1/2"	102
3/4"	1-3/4"	88
1"	2"	77
1-1/2"	2-1/2"	61
2"	3"	51
3"	4"	38
4"	5"	30
5"	6"	26
6"	7"	22
8"	9"	17

Estimations based upon 1/8" product depth, with 1/2" overlap. For 1/4" depth, divide values by 2. For wall to wall and top of wall joints, divide values by 2 to estimate for both sides of wall.

TABLE 6

CFS-SP WB Firestop Joint Spray, CP 672 FC and CP 572 estimation for fluted deck

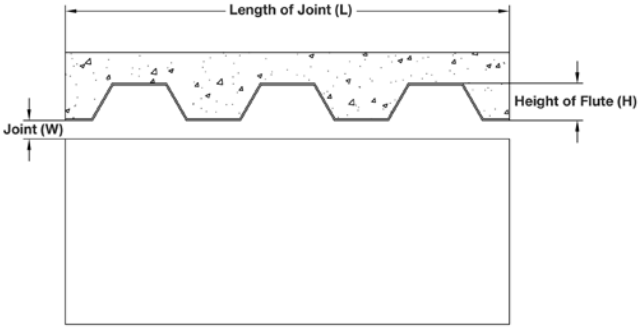

L = Length of Joint (ft)
W = Width of Joint (in)
H = Height of Flute (in)

Area of Flutes (sq. in.) = (L x 12 x H) / 2
Area of joint (sq. in.) = L x 12 x W
Area of Overspray (sq. in.) = L x 12
Volume (cu. in) =
(Area of Flute + Area of Joint + Area of Overspray) x 0.125*
Multiply by 2 for both sides of the wall.

One 5-gallon pail of Hilti CFS-SP WB Firestop Joint Spray, CP 672 FC and CP 572 contains 1,155 cubic inches.

*Based on 1/8" (0.125") wet coating thickness

TABLE 7

Mineral wool estimation

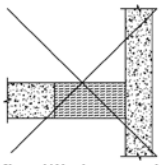

Orientation of Mineral Wool as seen above will NOT provide the proper compression as per UL and/or INTERTEK assemblies

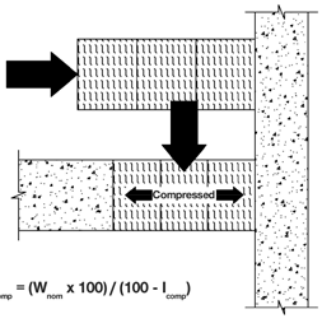

$T_{uncomp} = (W_{nom} \times 100) / (100 - I_{comp})$

Where:
T_{uncomp} = Uncompressed thickness necessary, in.
W_{nom} = Nominal (installed) joint width, in.
I_{comp} = Insulation compression percentage specified in system

Example: (8 x 100) / (100 - 33) =
800 / 67 = 11.94
Requires three 4" wide pieces of Mineral Wool

TABLE 8

Speed Plug and Strip estimation guide

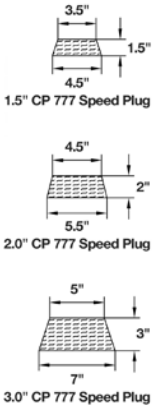

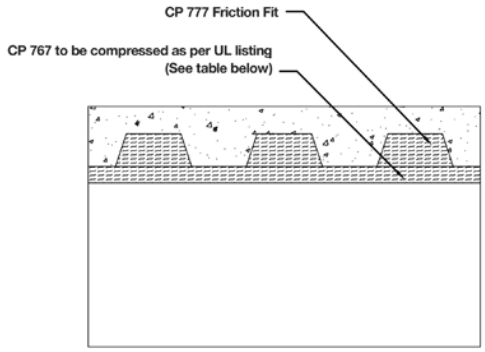

CP 767 Speed Strips
(2" x 5/8" x 36") — 1-HR. Wall
(2" x 1-1/4" x 36") — 2-HR. Wall

CP 767 Speed Strips
(4" x 5/8" x 36") — 1-HR. Wall
(4" x 1-1/4" x 36") — 2-HR. Wall

For CFS-SP WB Firestop Joint Spray and CP 572 Applications:
Multiply the number of open flutes X the width of the wall; then divide by 36 (Speed Plug length in inches) to determine number of Speed Plugs required.*
(Divide the total number of Speed Plugs required by 18 to determine Master Carton quantity)

*Each flute should be filled with one Speed Plug equal to wall width.
Open Flutes x Wall Width / 36 = Speed Plug quantity

For CP 606, CP 601S and CP 506 Applications:
Reduce width of plug to accomodate for sealant depth (i.e. 1/4" or 1/2").

CP 767 Speed Strip Selection Table

Joint Width	Compression	Strips Required
1"	50%	2" Strips
1"	33%	2" Strips
2"	50%	4" Strips
2"	33%	4" Strips

Hilti Firestop
Saving Lives
through innovation
and education

Active Fire Protection A system or device that is designed to alert occupants, aid in extinguishment, or limit the spread of fire (e.g. sprinkler system or alarm system).

Annular Space (Annulus) The region, measured in a straight line, between penetrants, or between the outer most portion of the penetrants and the inside periphery of a circular opening or the sides of a rectangular opening.
Example: a pipe with an outside diameter of 4.5" centered in a 6" diameter hole has an annular space of (6 - 4.5) ÷ 2 = 3/4".

Annular Space Requirements Per NFPA Std. #13 In section 4-5.4.3.4, it requires that sprinkler pipes in seismic areas, have a minimum annular space of 1-inch for pipes 1" through 3-1/2" and 2-inches for pipes 4" and larger. Exceptions to this standard do exist. Please consult NFPA Standard #13 for details.

Assembly Rating The combination of the T and F rating. In a joint assembly, T equals F.

ASTM E-814 "Standard Method of Fire Tests of Through-Penetration Firestops"

ASTM E-2307 "Standard Test Method for Determining Fire Resistance of Perimeter Fire Barriers Systems Using Intermediate-Scale Multi-story Test Apparatus"

Authority Having Jurisdiction The organization, office, or individual responsible for approving equipment, an installation, or procedure.

Backing Material (Forming Material, Packing Material) Material used in firestop systems (e.g. mineral wool, backer rod, filler foam) to set the depth and provide support for the fill, void cavity material.

Closed Piping System Piping system which is completely enclosed, usually carrying fluids under pressure. Examples: hot/cold water distribution, sprinkler piping, chilled water supply and return.

Combustible Capable of undergoing combustion.

cULus Mark An Underwriters' Laboratories certification mark that indicates compliance with both Canadian and U.S. requirements.

Draftstopping Building materials installed to prevent the movement of air, smoke, gases and flame to other areas of the building through large concealed passages, such as attic spaces and floor assemblies with suspended ceilings or open web trusses.

Endothermic Reaction Absorption of energy during a chemical reaction. Thus feeling cool to the touch.

Exothermic Reaction The production of energy during a chemical reaction. Thus feeling warm to the touch.

F Rating The time a firestop system prevents the passage of flame through an opening and successfully passes the hose stream test as determined by ASTM E-814 and UL 1479.

Fill, Void or Cavity Material A firestop material (e.g. sealant, putty, mastic, etc.)

Fire Barrier A continuous membrane, either vertical or horizontal, such as a wall or floor assembly that is designed and constructed with a specified fire resistance rating to limit the spread of fire and restrict the movement of smoke.

Fire Blocking Building materials installed to resist the free passage of flame to other areas of the building through concealed spaces.

Fire Compartment A space, within a building, that is enclosed by fire barriers on all sides, including the top and bottom.

Fire Damper A damper arranged to seal off airflow automatically through part of an air duct system, so as to restrict the passage of heat.

Fire Partition A vertical assembly of materials, having protected openings, designed to restrict the spread of fire.

Fire Resistance Rating The period of time a building or buildings component maintains the ability to confine a fire or continues to perform a structural function or both. This is usually determined or measured by ASTM E-119 test standard.

Fire Resistive Joint System A system consisting of specified materials designed and tested to resist the passage of flame and hot gases sufficient to ignite cotton waste for a prescribed period of time in accordance with UL 2079.

Fire Wall A fire resistance rated wall, having protected openings, that restricts the spread of fire and extends continuously from the foundation to or through the roof, with sufficient structural stability under fire conditions to allow collapse of construction on either side without collapse of the wall.

Firestop System A specific construction consisting of a fire-rated wall or floor assembly, a penetrating item or items passing through an opening in the assembly, and the materials designed to help prevent the spread of fire through the openings.

Hose Stream Test This portion of ASTM E-814 (UL 1479) is done to represent the structural integrity of the firestop system after it is exposed to heat.

Intumescent A term describing materials which are designed to expand significantly (typically 2 to 10 times original volume) and when exposed to sufficient heat. Intumescent materials are often used as firestops, particularly around combustible penetrants.

Joint System A joint system is a specific construction consisting of adjacent wall and/or floor assemblies and the materials designed to help prevent the spread of fire through a linear opening between the wall and/or floor assemblies.

L Rating An optional measurement of the rate of air leakage through test samples resulting from a specified air pressure difference applied across the surface of the test samples.

Hilti Firestop
Saving Lives
through innovation
and education

Membrane Penetration An opening made through one side (wall, floor or ceiling membrane) of an assembly.

Membrane Penetration Firestop A material, device or construction installed to resist, for a prescribed period of time when tested in accordance with appropriate test standard. The passage of flame and heat through openings in a protective membrane in order to accommodate cables, cable trays, conduit, tubing, pipes or similar items.

Non-combustible A material that, in the form in which it is used and under the conditions anticipated, will not aid combustion or add appreciable heat to an ambient fire.

Non-Rated System An assembly that has not been tested, or assigned an hourly rating in accordance with ASTM E-119.

Passive Fire Protection A device or system designed to confine fire and smoke in zones (e.g. compartmentalization).

Penetrant (Penetrating Item) Any item passing completely though a wall or floor, such as pipes, conduits, cables, etc.

Percent Fill The cross-sectional area of an opening that is occupied by a penetrating item(s). Typically found in UL Systems containing cables. Percent fill may be calculated with the following formulas:

Percent Fill ($\%_f$) = (A_w/A_o) x 100	N = number of wires
Area of Wire (A_w) = [3.14 x (r_c^2)] x N	r_c = radius of wire
Area of Opening (A_o) = 3.14 x (r_o^2)	r_o = radius of opening

Point of Contact (Penetrating Item) When listed UL system drawing allows penetrating item to “touch” edge of opening.

Shop Drawings Construction drawings generated by contractors, sub-contractors, or suppliers to communicate what they plan to furnish on a project to meet the terms of their contract. They differ from the contract drawings in that contract drawings are generated by the design firm and provided to the contractors and suppliers. Shop drawings are often marked-up contract drawings, but the supplier or contractor can also generate them from scratch. Shop drawings are part of the submittals, which are prepared so that the contractor can gain approval to proceed. They are reviewed and approved by the appropriate design professional. Areas where shop drawings are used include structural steel, miscellaneous metals, pre-cast concrete, and in some cases firestop

Smoke Barrier A continuous membrane, either vertical or horizontal, such as a wall, floor, or ceiling assembly, that is designed and constructed to restrict the movement of smoke. A smoke barrier might or might not have a fire resistance rating. Such barriers might have protected openings.

Smoke Compartment A space within a building enclosed by smoke barriers on all sides, including the top and bottom.

Smoke Damper A listed device installed in ducts and air transfer openings that is designed to resist the passage of air and smoke. The device is installed to operate automatically, controlled by a smoke detection system, and where required is capable of being positioned manually from a remote command station.

T Rating The time for the temperature of the unexposed surface of the firestop system or any penetrating item to rise 325°F above its initial temperature as determined by ASTM E-814 and UL 1479.

Through Penetration Penetrating items passing entirely through both protective membranes of bearing walls required to have a fire-resistance rating and wall requiring protected openings.

Type I Construction Construction in which the structural members are noncombustible (formerly referred to as fire resistive).

Type II Construction Construction in which the structural elements are entirely of noncombustible or limited combustible materials permitted by the code and protected to have some degree of fire resistance (formerly referred to as noncombustible).

Type III Construction Construction which all or part of the interior structural elements may be of combustible materials or any other material permitted by the particular building code being applied (formerly referred to as exterior protected combustible or ordinary construction).

Type IV Construction Construction in which structural members i.e. columns, beams, arches, floors, and roofs, are basically of unprotected wood (solid or laminated) with large cross-sectional areas (formerly referred to as heavy timber).

Type V Construction Construction which the structural members are entirely of wood or any other material permitted by the code being applied (formerly referred to as wood frame).

UL UL is an abbreviation for Underwriters Laboratories Inc., a not for profit independent organization testing for public safety.

UL 1479 “Fire Tests of Through-Penetration Firestops” (equivalent to ASTM E-814).

UL 2079 “Tests for Fire Resistance of Building Joint Systems.”

UL Fire Resistance Directory UL publication which contains descriptions and ratings of firestop systems.

Vented (Open) Piping System Piping system which is atmospherically vented by design to prevent backflow or vacuum. Examples: DWV piping (drain, waste or vent).

W-rating An optional rating for through penetrations Firestop systems. Determines the effectiveness of a firestop system to restrict the flow of water. Class 1-rated firestops have been shown to resist up to 3 feet of water column for 72 hours.

The UL Fire Resistance Directory utilizes an alpha-numeric numbering system: Basic number system = ALPHA–ALPHA–NUMERIC

Through – Penetrations

The first letter represents what is being penetrated:	The second letter(s) provide more information about the floor or wall:	The four digit number describes the penetrating item(s):
F = FLOOR W = WALLS C = FLOORS OR WALLS (COMBINED)	A = CONCRETE FLOORS WITH A MINUMUM THICKNESS LESS THAN OR EQUAL TO 5 IN. B = CONCRETE FLOORS WITH A MINUMUM THICKNESS GREATER THAN 5 IN. C = FRAMED FLOORS D = STEEL DECKS IN MARINE VESSELS F = FOR-CEILING ASSEMBLIES CONSISTING OF CONCRETE WITH MEMBRANE PROTECTION F THRU I = NOT USED AT PRESENT TIME J = CONCRETE OR MASONRY WALLS WITH A MINUMUM THICKNESS LESS THAN OR EQUAL TO 8 IN. K = CONCRETE OR MASONRY WALLS WITH A MINUMUM THICKNESS GREATER THAN 8 IN. L = FRAMED WALLS M = BULKHEADS IN MARINE VESSELS N = COMPOSITE PANEL WALLS O THRU Z = NOT USED AT PRESENT TIME	0000 – 0999 BLANK OPENINGS 1000 – 1999 METAL PIPE, CONDUIT OR TUBING 2000 – 2999 NONMETALLIC PIPE CONDUIT OR TUBING 3000 – 3999 CABLES 4000 – 4999 CABLE TRAYS 5000 – 5999 INSULATED PIPES 6000 – 6999 MISCELLANEOUS ELECTRICAL (BUSWAY) 7000 – 7999 MISCELLANEOUS MECHANICAL 8000 – 8999 MIXED PENETRATING ITEMS 9000 – 9999 RESERVED FOR FUTURE USE

EXAMPLE: CAJ1150

C = FLOOR OR WALL PENETRATION
A = CONCRETE FLOOR 5" OR LESS
J = CONCRETE OR MASONRY WALLS 8" OR LESS

1150 = METAL PIPE, CONDUIT OR TUBING

Joint Systems

The first letters identify the type of joint:	The third letter signifies the movement capabilities of the joint system:	The four digit number describes the nominal joint width:
FF = FLOOR-TO-FLOOR WW = WALL-TO-WALL FW = FLOOR-TO-WALL HW = HEAD-TO-WALL CG = WALL-TO WALL JOINTS INTENDED AS CORNER GUARDS BW = BOTTOM OF WALL	S = NO MOVEMENT (STATIC) D = ALLOWS MOVEMENT (DYNAMIC)	0000 – 0999 LESS THAN OR EQUAL TO 2" 1000 – 1999 GREATER THAN 2" AND LESS THAN OR EQUAL TO 6" 2000 – 2999 GREATER THAN 6" AND LESS THAN OR EQUAL TO 12" 3000 – 3999 GREATER THAN 12" AND LESS THAN OR EQUAL TO 24" 4000 – 4999 GREATER THAN 24"

EXAMPLE: HWD0042

HW = HEAD-OF-WALL
D = ALLOWS MOVEMENT (DYNAMIC)

0042 = LESS THAN OR EQUAL TO 2"

Perimeter Fire Containment Systems

The first letters identify the perimeter fire containment system:	The third letter signifies the movement capabilities of the joint system:	The four digit number describes the nominal joint width:
CW = CURTAIN WALL	S = NO MOVEMENT (STATIC) D = ALLOWS MOVEMENT (DYNAMIC)	0000 – 0999 LESS THAN OR EQUAL TO 2" 1000 – 1999 GREATER THAN 2" AND LESS THAN OR EQUAL TO 6" 2000 – 2999 GREATER THAN 6" AND LESS THAN OR EQUAL TO 12"

Hilti Firestop
Saving Lives through innovation and education

Certificate of Compliance

Certificate Number 20060214-R13240
Report Reference 2006 February 14
Issue Date 2006 February 14

Page 1 of 1

Underwriters Laboratories Inc.®

Issued to: Hilti, Inc.
5400 S 122ND East Ave
Tulsa, OK 74146 USA

This is to certify that representative samples of Fill, Void or Cavity Materials
CP601S

Have been investigated by Underwriters Laboratories Inc.® in accordance with the Standard(s) indicated on this Certificate.

Standard(s) for Safety: ANSI/UL 1479, ANSI/UL 2079, CAN/ULC-S115-05

Additional Information: CP601S Sealant for use in Joint Systems and CP601S Sealant for use in Through-Penetration Firestop Systems as currently described in the UL Fire Resistance Directory.

Only those products bearing the UL Classification Mark should be considered as being covered by UL's Classification and Follow-Up Service.

The UL Classification Mark includes: UL in a circle symbol: with the word "CLASSIFIED" (as shown); a control number (may be alphanumeric) assigned by UL; a statement to indicate the extent of UL's evaluation of the product; and, the product category name (product identity) as indicated in the appropriate UL Directory.

Look for the UL Classification Mark on the product

Issued by:
Mona Couloute
Underwriters Laboratories Inc.

Reviewed by:
Christopher Johnson
Underwriters Laboratories Inc.

Certificate of Compliance

Certificate Number 20060214-R13240B
Report Reference 2006 February 14
Issue Date 2006 February 14

Page 1 of 1

Underwriters Laboratories Inc.®

Issued to: Hilti, Inc.
5400 S 122ND East Ave
Tulsa, OK 74146 USA

This is to certify that representative samples of Fill, Void or Cavity Materials
CP606

Have been investigated by Underwriters Laboratories Inc.® in accordance with the Standard(s) indicated on this Certificate.

Standard(s) for Safety: ANSI/UL 1479, ANSI/UL 2079, CAN/ULC-S115-05

Additional Information: CP606 Sealant for use in Joint Systems and CP606 Sealant for use in Through-Penetration Firestop Systems as currently described in the UL Fire Resistance Directory.

Only those products bearing the UL Classification Mark should be considered as being covered by UL's Classification and Follow-Up Service.

The UL Classification Mark includes: UL in a circle symbol: with the word "CLASSIFIED" (as shown); a control number (may be alphanumeric) assigned by UL; a statement to indicate the extent of UL's evaluation of the product; and, the product category name (product identity) as indicated in the appropriate UL Directory.

Look for the UL Classification Mark on the product

Issued by:
Mona Couloute
Underwriters Laboratories Inc.

Reviewed by:
Christopher Johnson
Underwriters Laboratories Inc.

Certificate of Compliance

Certificate Number 20060214-R13240G
Report Reference 2006 February 14
Issue Date 2006 February 14

Page 1 of 1

Underwriters Laboratories Inc.®

Issued to: Hilti, Inc.
5400 S 122ND East Ave
Tulsa, OK 74146 USA

This is to certify that representative samples of Fill, Void or Cavity Materials
CP 617

Have been investigated by Underwriters Laboratories Inc.® in accordance with the Standard(s) indicated on this Certificate.

Standard(s) for Safety: ANSI/UL 1479, ANSI/UL 263, CAN/ULC-S115-05

Additional Information: CP 617 Firestop Putty Pad for use in Through-Penetration Firestop Systems and Wall Opening Protective Materials as currently described in the UL Fire Resistance Directory.

Only those products bearing the UL Classification Mark should be considered as being covered by UL's Classification and Follow-Up Service.

The UL Classification Mark includes: UL in a circle symbol: with the word "CLASSIFIED" (as shown); a control number (may be alphanumeric) assigned by UL; a statement to indicate the extent of UL's evaluation of the product; and, the product category name (product identity) as indicated in the appropriate UL Directory.

Look for the UL Classification Mark on the product

Issued by:
Mona Couloute
Underwriters Laboratories Inc.

Reviewed by:
Christopher Johnson
Underwriters Laboratories Inc.

Certificate of Compliance

Certificate Number 20060214-R13240I
Report Reference 2006 February 14
Issue Date 2006 February 14

Page 1 of 1

Underwriters Laboratories Inc.®

Issued to: Hilti, Inc.
5400 S 122ND East Ave
Tulsa, OK 74146 USA

This is to certify that representative samples of Fill, Void or Cavity Materials
CP 620

Have been investigated by Underwriters Laboratories Inc.® in accordance with the Standard(s) indicated on this Certificate.

Standard(s) for Safety: ANSI/UL 1479, CAN/ULC-S115-05

Additional Information: CP 620 Fire Foam for in Through-Penetration Firestop Systems as currently described in the UL Fire Resistance Directory.

Only those products bearing the UL Classification Mark should be considered as being covered by UL's Classification and Follow-Up Service.

The UL Classification Mark includes: UL in a circle symbol: with the word "CLASSIFIED" (as shown); a control number (may be alphanumeric) assigned by UL; a statement to indicate the extent of UL's evaluation of the product; and, the product category name (product identity) as indicated in the appropriate UL Directory.

Look for the UL Classification Mark on the product

Issued by:
Mona Couloute
Underwriters Laboratories Inc.

Reviewed by:
Christopher Johnson
Underwriters Laboratories Inc.

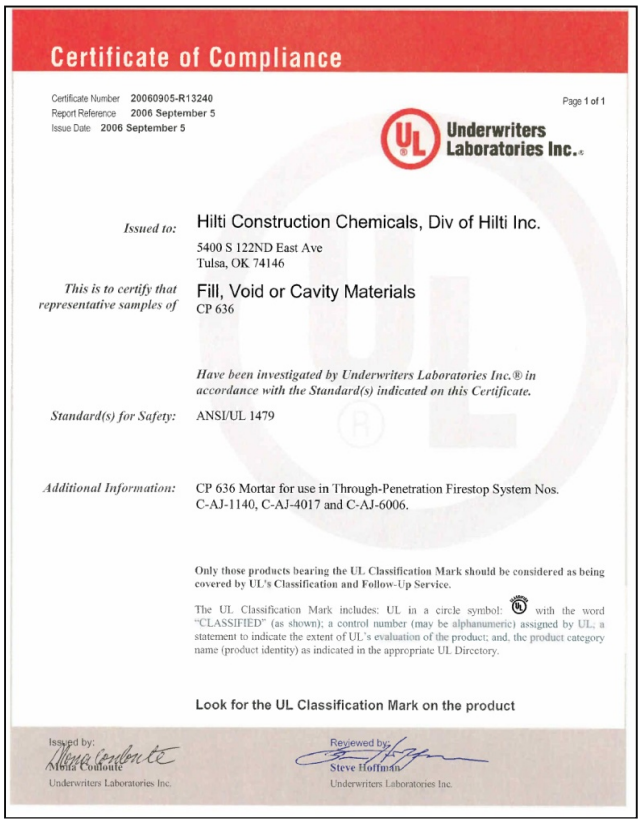

Certificate of Compliance

Certificate Number 20060905-R13240
Report Reference 2006 September 5
Issue Date 2006 September 5

Page 1 of 1

Underwriters Laboratories Inc.®

Issued to: Hilti Construction Chemicals, Div of Hilti Inc.
5400 S 122ND East Ave
Tulsa, OK 74146

This is to certify that representative samples of Fill, Void or Cavity Materials
CP 636

Have been investigated by Underwriters Laboratories Inc.® in accordance with the Standard(s) indicated on this Certificate.

Standard(s) for Safety: ANSI/UL 1479

Additional Information: CP 636 Mortar for use in Through-Penetration Firestop System Nos. C-AJ-1140, C-AJ-4017 and C-AJ-6006.

Only those products bearing the UL Classification Mark should be considered as being covered by UL's Classification and Follow-Up Service.

The UL Classification Mark includes: UL in a circle symbol with the word "CLASSIFIED" (as shown); a control number (may be alphanumeric) assigned by UL; a statement to indicate the extent of UL's evaluation of the product; and, the product category name (product identity) as indicated in the appropriate UL Directory.

Look for the UL Classification Mark on the product

Issued by:
Mona Coulouite
Underwriters Laboratories Inc.

Reviewed by:
Steve Hoffman
Underwriters Laboratories Inc.

Certificate of Compliance

Certificate Number 20069214-R15431
Report Reference 2006 February 14
Issue Date 2006 February 14

Page 1 of 1

Underwriters Laboratories Inc.®

Issued to: Hilti, Inc.
5400 S 122ND East Ave
Tulsa, OK 74146 USA

This is to certify that representative samples of Firestop Devices
CP643N 50/1.5 in., CP643N 63/2 in., CP643N 90/3 in. and CP643N 110/4 in., CP643N 160/6 in., CP644 200/8 in. and CP644 250/10 in.

Have been investigated by Underwriters Laboratories Inc.® in accordance with the Standard(s) indicated on this Certificate.

Standard(s) for Safety: ANSI/UL 1479, CAN/ULC-S115-05

Additional Information: CP 643N and CP 644 Firestop Collar for use in Through-Penetration Firestop Systems as currently described in the UL Fire Resistance Directory.

Only those products bearing the UL Classification Mark should be considered as being covered by UL's Classification and Follow-Up Service.

The UL Classification Mark includes: UL in a circle symbol with the word "CLASSIFIED" (as shown); a control number (may be alphanumeric) assigned by UL; a statement to indicate the extent of UL's evaluation of the product; and, the product category name (product identity) as indicated in the appropriate UL Directory.

Look for the UL Classification Mark on the product

Issued by:
Mona Coulouite
Underwriters Laboratories Inc.

Reviewed by:
Christopher Johnson
Underwriters Laboratories Inc.

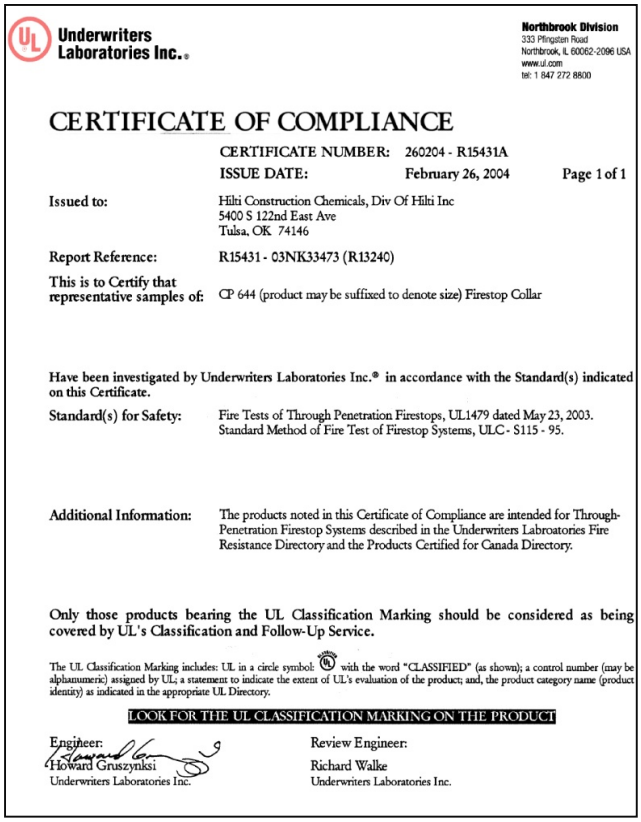

Underwriters Laboratories Inc.®

Northbrook Division
333 Pfingsten Road
Northbrook, IL 60062-2096 USA
www.ul.com
tel: 1 847 272 8800

CERTIFICATE OF COMPLIANCE

CERTIFICATE NUMBER: 260204 - R15431A
ISSUE DATE: February 26, 2004 **Page 1 of 1**

Issued to: Hilti Construction Chemicals, Div Of Hilti Inc
5400 S 122nd East Ave
Tulsa, OK 74146

Report Reference: R15431 - 03NK33473 (R13240)

This is to Certify that representative samples of: CP 644 (product may be suffixed to denote size) Firestop Collar

Have been investigated by Underwriters Laboratories Inc.® in accordance with the Standard(s) indicated on this Certificate.

Standard(s) for Safety: Fire Tests of Through Penetration Firestops, UL1479 dated May 23, 2003. Standard Method of Fire Test of Firestop Systems, ULC - S115 - 95.

Additional Information: The products noted in this Certificate of Compliance are intended for Through-Penetration Firestop Systems described in the Underwriters Labroatories Fire Resistance Directory and the Products Certified for Canada Directory.

Only those products bearing the UL Classification Marking should be considered as being covered by UL's Classification and Follow-Up Service.

The UL Classification Marking includes: UL in a circle symbol with the word "CLASSIFIED" (as shown); a control number (may be alphanumeric) assigned by UL; a statement to indicate the extent of UL's evaluation of the product; and, the product category name (product identity) as indicated in the appropriate UL Directory.

LOOK FOR THE UL CLASSIFICATION MARKING ON THE PRODUCT

Engineer:
Howard Gruszynksi
Underwriters Laboratories Inc.

Review Engineer:
Richard Walke
Underwriters Laboratories Inc.

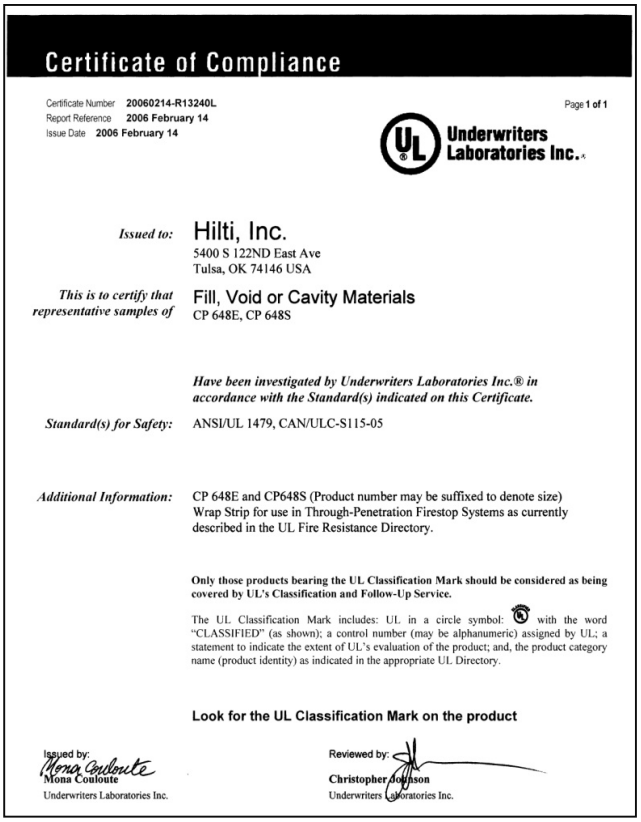

Certificate of Compliance

Certificate Number 20060214-R13240L
Report Reference 2006 February 14
Issue Date 2006 February 14

Page 1 of 1

Underwriters Laboratories Inc.®

Issued to: Hilti, Inc.
5400 S 122ND East Ave
Tulsa, OK 74146 USA

This is to certify that representative samples of Fill, Void or Cavity Materials
CP 648E, CP 648S

Have been investigated by Underwriters Laboratories Inc.® in accordance with the Standard(s) indicated on this Certificate.

Standard(s) for Safety: ANSI/UL 1479, CAN/ULC-S115-05

Additional Information: CP 648E and CP648S (Product number may be suffixed to denote size) Wrap Strip for use in Through-Penetration Firestop Systems as currently described in the UL Fire Resistance Directory.

Only those products bearing the UL Classification Mark should be considered as being covered by UL's Classification and Follow-Up Service.

The UL Classification Mark includes: UL in a circle symbol with the word "CLASSIFIED" (as shown); a control number (may be alphanumeric) assigned by UL; a statement to indicate the extent of UL's evaluation of the product; and, the product category name (product identity) as indicated in the appropriate UL Directory.

Look for the UL Classification Mark on the product

Issued by:
Mona Coulouite
Underwriters Laboratories Inc.

Reviewed by:
Christopher Johnson
Underwriters Laboratories Inc.

Certificate of Compliance

Certificate Number 20111214-R13240
Report Reference File R13240
Issue Date 2011 December 14

Page 1 of 1

Underwriters Laboratories

Issued to: Hilti Construction Chemicals, Div of Hilti Inc.
5400 S 122nd East Ave
Tulsa, OK 74146

This is to certify that representative samples of Fill, Void or Cavity Materials

CFS-BL Firestop Block

Have been investigated by Underwriters Laboratories in accordance with the Standard(s) indicated on this Certificate.

Standard(s) for Safety: ANSI/UL 1479, "Fire Tests of Through-Penetration Firestops," CAN/ULC-S115, "Standard Method of Fire Tests of Firestop Systems." Third Edition revised March 1, 2010

Additional Information: See UL On-line Certification Directory at WWW.UL.COM for additional information.

CFS-BL Firestop Block for use in Through-Penetration Firestop Systems as currently described in the UL Fire Resistance Directory.

Only those products bearing the UL Classification Mark should be considered as being covered by UL's Classification and Follow-Up Service.

The UL Classification Mark includes: UL in a circle symbol with the word "CLASSIFIED" (as shown); a control number (may be alphanumeric) assigned by UL; a statement to indicate the extent of UL's evaluation of the product; and, the product category name (product identity) as indicated in the appropriate UL Directory.

Look for the UL Classification Mark on the product

William R. Carney
Director, North American Certification Programs
Underwriters Laboratories Inc.
Any information and documentation involving UL Mark services are provided on behalf of Underwriters Laboratories Inc. (UL) or any authorized licensee of UL.
For questions, please contact a local UL Customer Service Representative at http://www.ul.com/global/eng/pages/corporate/contactus

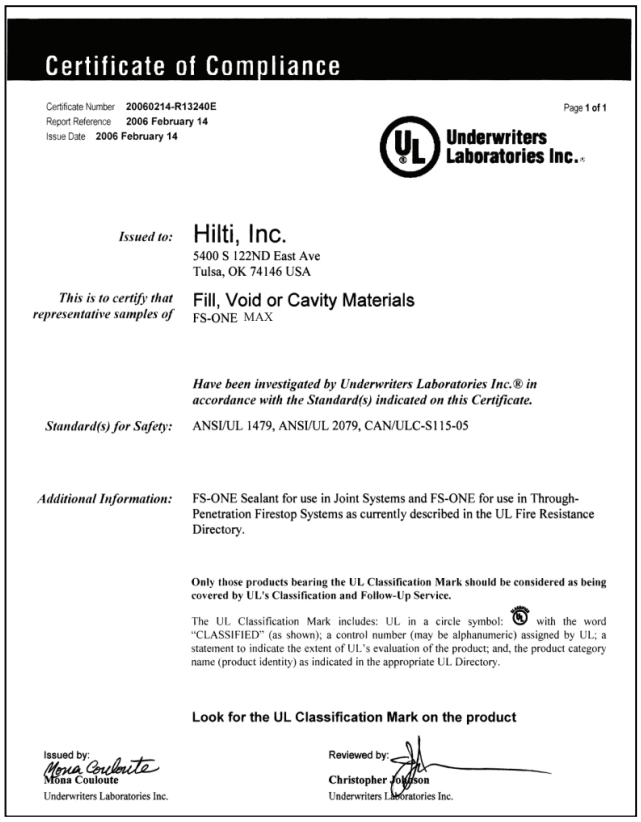

Certificate of Compliance

Certificate Number 20060214-R13240E
Report Reference 2006 February 14
Issue Date 2006 February 14

Page 1 of 1

Underwriters Laboratories Inc.®

Issued to: Hilti, Inc.
5400 S 122ND East Ave
Tulsa, OK 74146 USA

This is to certify that representative samples of Fill, Void or Cavity Materials
FS-ONE MAX

Have been investigated by Underwriters Laboratories Inc.® in accordance with the Standard(s) indicated on this Certificate.

Standard(s) for Safety: ANSI/UL 1479, ANSI/UL 2079, CAN/ULC-S115-05

Additional Information: FS-ONE Sealant for use in Joint Systems and FS-ONE for use in Through-Penetration Firestop Systems as currently described in the UL Fire Resistance Directory.

Only those products bearing the UL Classification Mark should be considered as being covered by UL's Classification and Follow-Up Service.

The UL Classification Mark includes: UL in a circle symbol with the word "CLASSIFIED" (as shown); a control number (may be alphanumeric) assigned by UL; a statement to indicate the extent of UL's evaluation of the product; and, the product category name (product identity) as indicated in the appropriate UL Directory.

Look for the UL Classification Mark on the product

Issued by: Mona Couloute
Underwriters Laboratories Inc.

Reviewed by: Christopher Johnson
Underwriters Laboratories Inc.

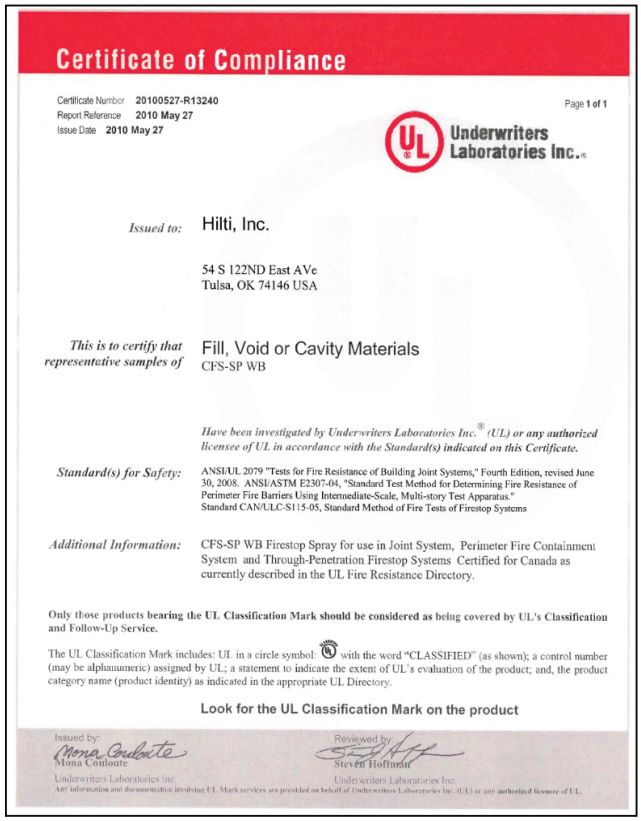

Certificate of Compliance

Certificate Number 20100527-R13240
Report Reference 2010 May 27
Issue Date 2010 May 27

Page 1 of 1

Underwriters Laboratories Inc.®

Issued to: Hilti, Inc.

54 S 122ND East AVe
Tulsa, OK 74146 USA

This is to certify that representative samples of Fill, Void or Cavity Materials
CFS-SP WB

Have been investigated by Underwriters Laboratories Inc.® (UL) or any authorized licensee of UL in accordance with the Standard(s) indicated on this Certificate.

Standard(s) for Safety: ANSI/UL 2079 "Tests for Fire Resistance of Building Joint Systems," Fourth Edition, revised June 30, 2008. ANSI/ASTM E2307-04, "Standard Test Method for Determining Fire Resistance of Perimeter Fire Barriers Using Intermediate-Scale, Multi-story Test Apparatus." Standard CAN/ULC-S115-05, Standard Method of Fire Tests of Firestop Systems

Additional Information: CFS-SP WB Firestop Spray for use in Joint System, Perimeter Fire Containment System and Through-Penetration Firestop Systems Certified for Canada as currently described in the UL Fire Resistance Directory.

Only those products bearing the UL Classification Mark should be considered as being covered by UL's Classification and Follow-Up Service.

The UL Classification Mark includes: UL in a circle symbol with the word "CLASSIFIED" (as shown); a control number (may be alphanumeric) assigned by UL; a statement to indicate the extent of UL's evaluation of the product; and, the product category name (product identity) as indicated in the appropriate UL Directory.

Look for the UL Classification Mark on the product

Issued by: Mona Couloute
Underwriters Laboratories Inc.

Reviewed by: Steven Hoffman
Underwriters Laboratories Inc.

Any information and documentation involving UL Mark services are provided on behalf of Underwriters Laboratories Inc. (UL) or any authorized licensee of UL.

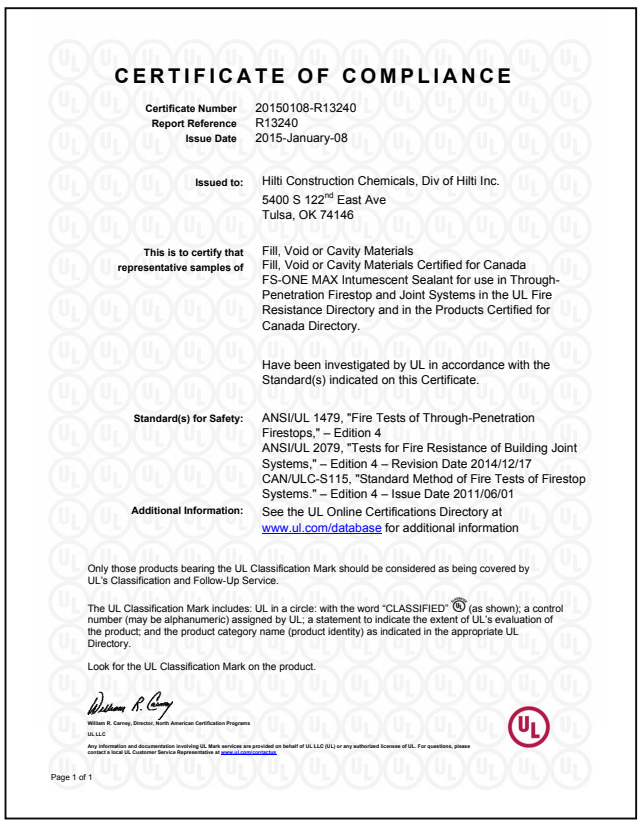

CERTIFICATE OF COMPLIANCE

Certificate Number 20150108-R13240
Report Reference R13240
Issue Date 2015-January-08

Issued to: Hilti Construction Chemicals, Div of Hilti Inc.
5400 S 122nd East Ave
Tulsa, OK 74146

This is to certify that representative samples of Fill, Void or Cavity Materials
Fill, Void or Cavity Materials Certified for Canada
FS-ONE MAX Intumescent Sealant for use in Through-Penetration Firestop and Joint Systems in the UL Fire Resistance Directory and in the Products Certified for Canada Directory.

Have been investigated by UL in accordance with the Standard(s) indicated on this Certificate.

Standard(s) for Safety: ANSI/UL 1479, "Fire Tests of Through-Penetration Firestops," – Edition 4
ANSI/UL 2079, "Tests for Fire Resistance of Building Joint Systems," – Edition 4 – Revision Date 2014/12/17
CAN/ULC-S115, "Standard Method of Fire Tests of Firestop Systems." – Edition 4 – Issue Date 2011/06/01

Additional Information: See the UL Online Certifications Directory at www.ul.com/database for additional information

Only those products bearing the UL Classification Mark should be considered as being covered by UL's Classification and Follow-Up Service.

The UL Classification Mark includes: UL in a circle: with the word "CLASSIFIED" (as shown); a control number (may be alphanumeric) assigned by UL; a statement to indicate the extent of UL's evaluation of the product; and the product category name (product identity) as indicated in the appropriate UL Directory.

Look for the UL Classification Mark on the product.

William R. Carney, Director, North American Certification Programs
UL LLC

Any information and documentation involving UL Mark services are provided on behalf of UL LLC (UL) or any authorized licensee of UL. For questions, please contact a local UL Customer Service Representative at www.ul.com/contactus

Page 1 of 1

澳門特別行政區政府
Governo da Região Administrativa Especial de Macau
消防局
Corpo de Bombeiros

頁編號 Pág. n.° 1/1
文件編號 Inf. n.° 277/DT/2006
日期 Data 14 / 02 / 2006

審閱 /Visto
於 Em 14/02/2006
技術廳廳長
O Chefe do D.T.

意見書

事由： 要求審批"HILTI" 喜利得防火延燒產品 – CP 601S Elastic Firestop Sealant

參件： 進入編號 1106 (25/01/2006)
喜利得(香港)有限公司來函編號：M-AL_LE02_06(18/01/2006)
意見書編號 248/DT/2006 (09/02/2006)

Ø1. 上述公司交來以下 CP 601S Elastic Firestop Sealant 的資料：

a. 澳門大學按照 BS476 Part20：1987 檢驗依據測試標準發出的 CP 601S Elastic Firestop Sealant(彈性防火膠泥)檢驗報告複印本(No2005-FRT40)；

b. Underwriters Laboratories(UL Online Certifications Directory)XHHW.R13240 Fill, Void or Cavity Materials – CP 601S Sealant for use in Joint System & CP 601S Sealant for use in Through –Penetration Firestop System 資料；

c. Warrington 防火研究中心發出的測試報告複印本，編號爲 WARRES No.71151/B；

Ø2. 根據上述的資料分析後，CP 601S Elastic Firestop Sealant(彈性防火膠泥)於試驗結果中顯示具 CRF245 能力。然而，如將此組件應用於不同組合形式使用時，應按照實際用途而作出相應評估；

Ø3. 本局對 CP 601S Elastic Firestop Sealant(彈性防火膠泥)使用於合符《防火安全規章》規範的標準時沒有異議。但最終決定仍須徵詢權限部門(土地工務運輸局)之意見。

二零零六年二月十三日，於技術廳研究暨試驗科

研究暨試驗科科長

黃勁松
副一等消防區長

消防局 格式四
CB – Modelo 4

A-4 規格印件 2005 年 9 月
Formato A-4 Imp. Set. 2005

澳門特別行政區政府
Governo da Região Administrativa Especial de Macau
消防局
Corpo de Bombeiros

頁編號 Pág. n.° 1/1
文件編號 Inf. n.° 270/DT/2006
日期 Data 14 / 02 / 2006

審閱 /Visto
於 Em 14/02/2006
技術廳廳長
O Chefe do D.T.

意見書

事由： 要求審批"HILTI" 喜利得防火延燒產品 – CP 606 Intumescent Joint Filler

參件： 進入編號 1099 (25/01/2006)
喜利得(香港)有限公司來函編號：M-AL_LE01_06(18/01/2006)
意見書編號 241/DT/2006 (09/02/2006)

Ø1. 上述公司交來以下 CP 606 Intumescent Joint Filler 的資料：

a. 澳門大學按照 BS476 Part20：1987 檢驗依據測試標準發出的 CP 606 Intumescent Joint Fille(彈性防火膠)檢驗報告複印本(No2005-FRT42)；

b. Underwriters Laboratories(UL Online Certifications Directory)XHHW.R13240 Fill, Void or Cavity Materials – CP 606 Sealant for use in Joint System & CP 606 Sealant for use in Through –Penetration Firestop System 資料；

c. Warrington 防火研究中心發出的測試報告複印本，編號爲 WARRES No.69754/C；

Ø2. 根據上述的資料分析後，包括 CP 606 Intumescent Joint Fille(彈性防火膠)的試件組合於試驗結果中顯示具 CRF245 能力。然而，如將此組件應用於不同組合形式使用時，應按照實際用途而作出相應評估。

Ø3. 本局對 CP 606 Intumescent Joint Fille(彈性防火膠)使用於合符《防火安全規章》規範的標準時沒有異議。但最終決定仍須徵詢權限部門(土地工務運輸局)之意見。

二零零六年二月十三日，於技術廳研究暨試驗科

研究暨試驗科科長

黃勁松
副一等消防區長

消防局 格式四
CB – Modelo 4

A-4 規格印件 2005 年 9 月
Formato A-4 Imp. Set. 2005

澳門特別行政區政府
Governo da Região Administrativa Especial de Macau
消防局
Corpo de Bombeiros

頁編號 Pág. n.° 1/1
文件編號 Inf. n.° 109/DT/SEL/2009
日期 Data 06 07 2009

核閱
Visto
於 Em 14/7/2009
技術廳廳長
O Chefe do D.T.

意見書

事由： 要求審批喜利得防火延燒產品-CP660 Firestop Foam、CP617 Intumescent Acoustic Putty Pad、CP670 Firestop Acoustic Board

參件編號： 喜利得(香港)有限公司來函：ML09024，ML09025，ML09026
進入編號：7257(19/06/2009)
意見書編號：561/DT/SEL/2009，560/DT/SEL/2009

於 19/06/2009 收到喜利得(香港)有限公司交來上述交書及其附錄文件，本局之意見如下：

Ø1. 根據交來之資料分析，本局對 CP660 Firestop Foam、CP617 Intumescent Acoustic Putty Pad 及 CP670 Firestop Acoustic Board 使用於合符《防火安全規章》規範的標準時沒有異議。然而，當上述物料在落實個案使用時，應徵詢權限部門(土地工務運輸局)之最終意見。

二零零九年六月三十日於澳門消防局，於技術廳研究暨試驗科

梁兆富
消防員

D:\SEL 資料\1. SEL 常規工作\01. 意見書
(防火物料,消防系統,疏散計劃)\新製作之意見書\2009 年\II 意見書\II 關私人機構\HILTI_喜利得(香港)有限公司\7257_要求審批喜利得防火延燒產品(CP660_CP617_CP670)(已回).doc

消防局 格式四
CB – Modelo 4

A-4 規格印件 2008 年 9 月
Formato A-4 Imp. Set. 2008

澳門特別行政區政府
Governo da Região Administrativa Especial de Macau
消防局
Corpo de Bombeiros

頁編號 Pág. n.° 1/1
文件編號 Inf. n.° 275/DT/2006
日期 Data 14 / 02 / 2006

審閱 /Visto
於 Em 14/02/2006
技術廳廳長
O Chefe do D.T.

意見書

事由： 要求審批"HILTI" 喜利得防火延燒產品 – CP 620 Expanding Firestop Foam

參件： 進入編號 1104 (25/01/2006)
喜利得(香港)有限公司來函編號：M-AL_LE08_06(18/01/2006)
意見書編號 246/DT/2006 (09/02/2006)

Ø1. 上述公司交來以下 CP 620 Expanding Firestop Foam 的資料：
a. 澳門大學按照 BS476 Part20：1987 檢驗依據測試標準發出的 CP 620 Expanding Firestop Foam(膨脹性防火發泡劑)檢驗報告複印本(No2005-FRT44)；
b. Underwriters Laboratories(UL Online Certifications Directory)XHHW.R13240 Fill, Void or Cavity Materials –CP 620 Expanding Firestop Foam for use in Through –Penetration Firestop System 資料；
c. Builiding Research Establishment Ltd.防火研究中心發山評估報告複印本(編號 CC205445A、CC20544B & CC20544C)

Ø2. 根據上述的資料分析後，包括 CP 620 Expanding Firestop Foam(膨脹性防火發泡劑)的試件組合於試驗結果中顯示具 CRF110 能力。然而，如將此組件應用於不同組合形式使用時，應按照實際用途而作出相應評估。

Ø3. 本局對 CP 620 Expanding Firestop Foam(膨脹性防火發泡劑)使用於合符《防火安全規章》規範的標準時沒有異議。但最終決定仍須徵詢權限部門(土地工務運輸局)之意見。

二零零六年二月十三日，於技術廳研究暨試驗科

研究暨試驗科科長

黃勁松
副一等消防區長

消防局 格式四
CB – Modelo 4

A-4 規格印件 2005 年 9 月
Formato A-4 Imp. Set. 2005

澳門特別行政區政府
Governo da Região Administrativa Especial de Macau
消防局
Corpo de Bombeiros

頁編號 Pág. n.° 1/1
文件編號 Inf. n.° 272/DT/2006
日期 Data 14 / 02 / 2006

審閱 /Visto
於 Em 14/02/2006
技術廳廳長
O Chefe do D.T.

意見書

事由： 要求審批"HILTI" 喜利得防火延燒產品 – CP 636 Firestop Mortar

參件： 進入編號 1101 (25/01/2006)
喜利得(香港)有限公司來函編號：M-AL_LE04_06(18/01/2006)
意見書編號 243/DT/2006 (09/02/2006)

Ø1. 上述公司交來以下 CP636 Firestop Mortar 的資料：

a. 澳門大學按照 BS476 Part20：1987 檢驗依據測試標準發出的 CP636 Firestop Mortar 檢驗報告複印本(No2005-FRT43)；
b. Underwriters Laboratories(UL Online Certifications Directory)XHHW.R13240 Fill, Void or Cavity Materials –CP636 Firestop Mortar for use in Through –Penetration Firestop System 資料；
c. Warrington 防火研究中心發出的測試報告複印本，編號爲 WARRES No.62305/B & ；134523；

Ø2. 根據上述的資料分析後，包括 CP636 Firestop Mortar 的試件組合於試驗結果中顯示具 CRF245 能力。然而，如將此組件應用於不同組合形式使用時，應按照實際用途而作出相應評估；

Ø3. 本局對 CP636 Firestop Mortar 使用於合符《防火安全規章》規範的標準時沒有異議。但最終決定仍須徵詢權限部門(土地工務運輸局)之意見。

二零零六年二月十三日，於技術廳研究暨試驗科

研究暨試驗科科長
黃勁松
副一等消防區長

消防局 格式四
CB – Modelo 4

A-4 規格印件 2005 年 9 月
Formato A-4 Imp. Set. 2005

澳門特別行政區政府
Governo da Região Administrativa Especial de Macau
消防局
Corpo de Bombeiros

頁編號 Pág. n.° 1/1
文件編號 Inf. n.° 273/DT/2006
日期 Data 14 / 02 / 2006

審閱 /Visto
於 Em 14/02/2006
技術廳廳長
O Chefe do D.T.

意見書

事由： 要求審批"HILTI" 喜利得防火延燒產品 – CP 643 Firestop Jacket

參件： 進入編號 1102 (25/01/2006)
喜利得(香港)有限公司來函編號：M-AL_LE06_06(18/01/2006)
意見書編號 244/DT/2006 (09/02/2006)

Ø1. 上述公司交來以下 CP 643 Firestop Jacket 的資料：

a. 澳門大學按照 BS476 Part20：1987 檢驗依據測試標準發出的 CP 643 Firestop Jacket (膨脹性防火圈)檢驗報告複印本(No2005-FRT45)；
b. Underwriters Laboratories(UL Online Certifications Directory)XHJLR15431 Firestop Devices 資料；
c. Warrington 防火研究中心發出的測試報告複印本，編號爲 WARRES No.128947/A &131014/A；

Ø2. 根據上述的資料分析後，包括 CP 643 Firestop Jacket(膨脹性防火圈)的試件組合於試驗結果中顯示具 CRF245 能力。然而，如將此組件應用於不同組合形式使用時，應按照實際用途而作出相應評估；

Ø3. 本局對 CP 643 Firestop Jacket (膨脹性防火圈)使用於合符《防火安全規章》規範的標準時沒有異議。但最終決定仍須徵詢權限部門(土地工務運輸局)之意見。

二零零六年二月十三日，於技術廳研究暨試驗科

研究暨試驗科科長
黃勁松
副一等消防區長

消防局 格式四
CB – Modelo 4

A-4 規格印件 2005 年 9 月
Formato A-4 Imp. Set. 2005

澳門特別行政區政府
Governo da Região Administrativa Especial de Macau
消防局
Corpo de Bombeiros

頁編號 Pág. n.° 1/1
文件編號 Inf. n.° 274/DT/2006
日期 Data 14 / 02 / 2006

審閱 /Visto
於 Em 14/02/2006
技術廳廳長
O Chefe do D.T.

意見書

事由： 要求審批"HILTI" 喜利得防火延燒產品 – CP 648 Firestop Wrap

參件： 進入編號 1103 (25/01/2006)
喜利得(香港)有限公司來函編號：M-AL_LE07_06(18/01/2006)
意見書編號 245/DT/2006 (09/02/2006)

Ø1. 上述公司交來以下 CP 648 Firestop Wrap 的資料：

a. 澳門大學按照 BS476 Part20：1987 檢驗依據測試標準發出的 CP 648 Firestop Wrap (防火帶)檢驗報告複印本(No2005-FRT47)；
b. Warrington 防火研究中心發出的測試報告複印本，編號爲 WARRES No.C132995；
c. Underwriters Laboratories(UL Online Certifications Directory)XHHW.R13240 Fill, Void or Cavity Materials；

Ø2. 根據上述的資料分析後，CP 648 Firestop Wrap 於試驗結果中顯示具 CRF13 能力。然而，如將此組件應用於不同組合形式使用時，應按照實際用途而作出相應評估；

Ø3. 上述物料使用在落實個案時，應徵詢權限部門(土地工務運輸局)之意見。

二零零六年二月十三日，於技術廳研究暨試驗科

研究暨試驗科科長
黃勁松
副一等消防區長

消防局 格式四
CB – Modelo 4

A-4 規格印件 2005 年 9 月
Formato A-4 Imp. Set. 2005

澳門特別行政區政府
Governo da Região Administrativa Especial de Macau
消防局
Corpo de Bombeiros

頁編號 Pág. n.° 1/1
文件編號 Inf. n.° 1197/DT/2006
日期 Data 27 / 06 / 2006

審閱 /Visto
於 Em 27/06/2006
技術廳廳長
O Chefe do D.T.

意見書

事由： 要求審批"HILTI" 喜利得防火延燒產品 – FS 657 Fire Block

參件： 進入編號 7271 (14/06/2006)
喜利得(香港)有限公司來函編號：M-AL_LE09_06(12/06/2006)
意見書編號 1160/DT/2006 (23/06/2006)

Ø1. 根據上述公司交來的資料分析後，由 FS 657 Fire Block (膨脹性防火磚)組成的試件組合，於試驗結果中顯示具 CRF70 的能力。然而，如將此組件應用於不同組合形式使用時，應按照實際用途而作出相應評估；

Ø2. 本局對 FS 657 Fire Block (膨脹性防火磚)使用於合符《防火安全規章》規範的標準時沒有異議。但最終決定仍須徵詢權限部門(土地工務運輸局)之意見。

二零零六年六月二十三日，於技術廳研究暨試驗科

研究暨試驗科科長
鍾兆豐
副消防區長

澳門特別行政區政府
Governo da Região Administrativa Especial de Macau
消防局
Corpo de Bombeiros

頁編號 Pág. n.° 1/1
文件編號 Inf. n.° 1199/DT/2006
日期 Data 27 / 06 / 2006

審閱 Visto
於 Em 07/07/2006
技術廳廳長
O Chefe do D.T.

意見書

事由： 要求審批"HILTI" 喜利得防火延燒產品 –FS ONE Firestop Sealant

參件： 進入編號 7272 (12/06/2006)
喜利得(香港)有限公司來函編號：M-AL_LE11_06(12/06/2006)
意見書編號:1198/DT/2006

Ø1. 根據上述公司交來的資料分析後，由 FS ONE Firestop Sealant (膨脹性防火泥膠)組成的試件組合於試驗結果中顯示具 CRF46 能力。然而，如將此組件應用於不同組合型式使用時，應按照實際用途而作出相應評估。

Ø2. 本局對 FS ONE Firestop Sealant (膨脹性防火泥膠)使用於合符《防火安全規章》規範的標準時沒有異議。但最終決定仍須徵詢權限部門(土地工務運輸局)之意見。

備註：上述試件組合試驗結果的耐火能力(CRF)，並不代表 FS ONE Firestop Sealant (膨脹性防火泥膠)所具有之耐火能力(CRF)，產品使用時應按照產品說明書內的特定應用範圍使用。

二零零六年七月三日，於技術廳研究暨試驗科

研究暨試驗科科長

鍾兆豐
副消防區長

澳門特別行政區政府
Governo da Região Administrativa Especial de Macau
消防局
Corpo de Bombeiros

頁編號 Pág. n.° 1/1
文件編號 Inf. n.° 1196/DT/2006
日期 Data 27 / 06 / 2006

審閱 Visto
於 Em 07/07/2006
技術廳廳長
O Chefe do D.T.

意見書

事由： 要求審批"HILTI" 喜利得防火延燒產品–CP672 Firestop Joint Spray

參件： 進入編號 7270 (12/06/2006)
喜利得(香港)有限公司來函編號：M-AL_LE10_06(12/06/2006)
意見書編號：1195/DT/2006

Ø1. 根據上述公司交來的資料分析後，由 CP672 Firestop Joint Spray (防火噴塗劑)組成的試件組合於試驗結果中顯示具 CRF180 能力。然而，如將此產品(CP672 Firestop Joint Spray)應用於不同組合型式使用時，應按照實際用途而作出相應評估；

Ø2. 本局對 CP672 Firestop Joint Spray (防火噴塗劑)使用於合符《防火安全規章》規範的標準時沒有異議。但最終決定仍須徵詢權限部門(土地工務運輸局)之意見。

備註：上述試件組合試驗結果的耐火能力(CRF)，並不代表 CP672 Firestop Joint Spray (防火噴塗劑)所具有之耐火能力(CRF)，產品使用時應按照產品說明書內的特定應用範圍使用。

二零零六年七月三日，於技術廳研究暨試驗科

研究暨試驗科科長

鍾兆豐
副消防區長

澳門特別行政區政府
Governo da Região Administrativa Especial de Macau
消防局
Corpo de Bombeiros

頁編號 Pág. n.° 1/2
文件編號 Inf. n.° 1121/DT/SEL/2015
日期 Data 08 / 04 / 2015

核閱 Visto
於 Em 10/04/2015
技術廳廳長
O Chefe do D.T.

意見書

事　由：申請批核防火延燒產品
參件編號：意見書編號：1120/DT/SEL/2015

於 19/03/2015 收到 Hilti HK Ltd 喜利得(香港)有限公司之文書及其附錄文件，本局之意見如下：

Ø1. 產品列表：

項目	型號	製造商
1.	Hilti CFS BL Firestop Block	Hilti Corporation

1.1 材料列表：

防火試件口尺寸：250mm(W)x200mm(H)x150mm(厚)
膨性防火磚尺寸：130mm(W)x50mm(H)x200mm(厚)
密度：約 0.27g/cm³
顏色：紅色

項目	物料	描述
1.	Penetration Seal	膨脹性防火磚尺寸：130mm(W)x50mm(H)x200mm(厚) 材質型號：CFS BL 安裝方法：牆身開洞 250mm(W)x200mm(H)x150mm(厚)，安放 8 個 CFS BL 及 Cable Tray 後在縫位填滿 FS-ONE。
2.	Cable Tray	材質：Perforated galvanized mild steel 厚度：0.7mm 尺寸：120mm(W)x10mm(H)
3.	電線	型號：16 core screened plastic sheathed cable 材質：Copper

1.2 根據遞交的資料有以下分析結果：
1.2.1 "Hilti CFS BL Firestop Block"，製造商：Hilti Corporation，經 BS476:Part20 檢驗，此膨脹性防火磚的隔熱性能及完整性均能達到 120 分鐘，但只適用於填充的用途，而不可作為一整幅間隔牆體使用。
1.2.2 上述結果只反映與 1.2 點相同之物料、結構、厚度及安裝方法之系統；
1.3 根據 1.2 的分析結果，本局對"Hilti CFS BL Firestop Block"，製造商：Hilti Corporation，完整性及隔熱性能均達到 120 分鐘沒有異議，但只適用於填充的用途，不可作為一整幅間隔牆體使用。並且上述產品並不具備獨立之耐火能力；因此，如將此組件應用於不同組合型式使用時，應按照實際用途而作出相應評估；但最終決定仍須徵詢權限部門(土地工務運輸局)之意見。

CB3515_DT2876_C-0058

測試時 測試後
CB – Modelo 4

A-4 規格附件 2013 年 11 月
Formato A-4 Insp. Nov. 2013

MONG KOK HILTI STORE

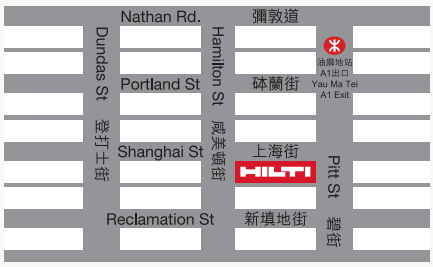

G/F, 403 Shanghai Street, Yau Ma Tei, Kowloon, Hong Kong

TAI KOK TSUI HILTI STORE

Shop 2, G/F, Lime Stardom, No. 1 Larch Street, Tai Kok Tsui, Kowloon, Hong Kong

MACAU HILTI STORE

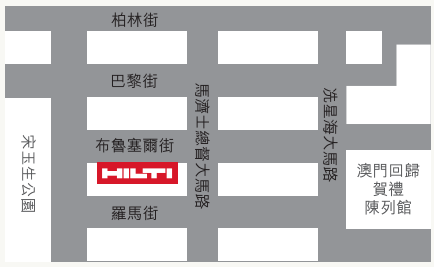

Rua De Bruxelas, S/N Edigicio, Kin Heng Long, Loja, W-R/C, Macau

Hilti (Hong Kong) Limited
701-704 & 708B, 7/F, Tower A, Manulife Financial Centre, 223 Wai Yip Street, Kwun Tong, Kowloon, Hong Kong
Customer Hotline: +852 8228 8118 (Hong Kong) 00800 8228 8118 (Macau Toll Free) I Fax: +852 2954 1751
hksales@hilti.com I www.hilti.com.hk I **Hilti Hong Kong**

Hilti = registered trademark of Hilti Corp., Schaan LI | 03/2018 Right of technical and programme changes reserved S.E. & O.